U.S. Department of Energy

Livermore Site Office, Livermore, California 94551

Lawrence Livermore National Laboratory

Lawrence Livermore National Security, LLC, Livermore, California 94551

UCRL-AM-109115 Rev. 13

LLNL Livermore Site and Site 300 Environmental Restoration Project Standard Operating Procedures (SOPs)

Editors

R. Goodrich
G. Lorega

ENVIRONMENTAL RESTORATION DEPARTMENT
CONTROLLED COPY
_____
THIS IS A RED STAMP
ERD

April 2009

Environmental Restoration Department

This work performed under the auspices of the U.S. Department of Energy by Lawrence Livermore National Laboratory under contract DE-AC52-07NA27344.

UCRL-AM-109115 Rev. 13

LLNL Livermore Site and Site 300 Environmental Restoration Project Standard Operating Procedures (SOPs)

Editors

R. Goodrich
G. Lorega

April 2009

Environmental Restoration Department

Table of Contents

SOP-1.1	Field Borehole Logging	Rev. 5
SOP-1.2	Borehole Sampling of Unconsolidated Sediments and Rock	Rev. 5
SOP-1.3	Drilling	Rev. 5
SOP-1.4	Monitor Well Installation	Rev. 5
SOP-1.5	Monitor Well Development	Rev. 5
SOP-1.6	Borehole Geophysical Logging	Rev. 5
SOP-1.7	Well Closure	Rev. 4
SOP-1.8	Disposal of Investigation-Derived Wastes (Drill Cuttings, Core Samples, and Drilling Mud)	Rev. 3
SOP-1.9	Suction Lysimeter Soil Moisture Sampling	Rev. 5
SOP-1.10	Soil Vapor Surveys	Rev. 5
SOP-1.11	Soil Surface Flux Monitoring of Gaseous Emission	Rev. 2
SOP-1.12	Surface Soil Sampling	Rev. 3
SOP-1.13	Operation of the AMS TR7000 Well Management System	Rev. 0
SOP 1.14	Final Well Development/Specific Capacity Tests at LLNL Livermore Site and Site 300	Rev. 2
SOP 1.15	Well Site Core Handling	Rev. 2
SOP 1.16	Four Wheel All Terrain Vehicle (ATV) Operation	Rev. 1
SOP 1.17	Treatment Facility Vapor Sampling	Rev. 3
SOP 1.18	Deployment, Retrieval, Sampling and Maintenance of Instrumented Membrane Technology (IMT) Borehole-Liner Systems	Rev. 2
SOP-2.1	Pre-sample Purging of Wells	Rev. 8
SOP-2.2	Field Measurements on Surface and Ground Waters	Rev. 5
SOP-2.3	Sampling Monitor Wells with Bladder Pumps, Electric Submersible Pumps, and Specific-Depth Grab Sampling Devices	Rev. 6
SOP-2.4	Sampling Monitor Wells with a Bailer	Rev. 7
SOP-2.5	Surface Water Sampling	Rev. 3
SOP-2.6	Sampling for Volatile Organic Compounds	Rev. 6
SOP-2.7	Pre-sample Purging and Sampling of Low-Yielding Monitor Wells	Rev. 6
SOP-2.8	Installation of Dedicated Sampling Devices	Rev. 5
SOP-2.9	Sampling for Tritium in Ground Water	Rev. 7

ENVIRONMENTAL RESTORATION DEPARTMENT
CONTROLLED COPY
#
THIS IS A RED STAMP
ERD

Revised Table of Contents reflects revisions and updates to the "September 2006 SOP Manual." The following SOPs have been revised: 1.12, 2.1, 2.2, 2.3, 2.4, 2.5, 2.6, 2.7, 2.9, 2.10, 2.13, 4.1, 4.3, 5.1, 5.3, 5.4, 5.6, 5.8, 5.10, 5.14, and 5.15. SOPs 4.10 and 6.1 have been added and SOP 5.2 has been deleted (it was combined with SOP 5.1).

04-09/ERD:gl

SOP-2.10	Well Disinfection and Coliform Bacteria Sampling	Rev. 4
SOP-2.12	Ground Water Monitor Well and Equipment Maintenance	Rev. 3
SOP-2.13	Barcad Sampling	Rev. 3
SOP-3.1	Water-Level Measurements	Rev. 7
SOP-3.2	Pressure Transducer Field Calibration	Rev. 3
SOP-3.3	Hydraulic Testing (Slug/Bail)	Rev. 3
SOP-3.4	Hydraulic Testing (Pumping)	Rev. 3
SOP-4.1	General Instructions for Field Personnel	Rev. 7
SOP-4.2	Sample Control and Documentation	Rev. 7
SOP-4.3	Sample Containers and Preservation	Rev. 6
SOP-4.4	Guide to Packaging and Shipping of Samples	Rev. 6
SOP-4.5	General Equipment Decontamination	Rev. 5
SOP-4.6	Validation and Verification of Radiological and Nonradiological Data Generated by Analytical Laboratories	Rev. 5
SOP-4.7A	Livermore Site Treatment and Disposal of Well Development and Well Purge Fluids	Rev. 4
SOP-4.7B	Site 300 Treatment and Disposal of Well Development and Well Purge Fluids	Rev. 4
SOP-4.8	Calibration/Verification and Maintenance of Field Instruments Used in Measuring Parameters of Surface Water, Ground Water, and Soils	Rev. 6
SOP-4.9	Collection of Field QC Samples	Rev. 5
SOP-4.10	Records Management	Rev. 0
SOP-4.12	Quality Improvement Forms (QIFs)	Rev. 2
SOP-4.13	Standard Operating Procedure Process	Rev. 1
SOP-4.14	Mapping with the Trimble Pathfinder Pro XR GPS System	Rev. 0
SOP-4.15	ERD Self-assessments and Walk-abouts	Rev. 1
SOP-4.16	ERD Lockout/Tagout Program	Rev. 1
SOP-4.17	Change of Aqueous and Vapor Phase Granular Activated Carbon	Rev. 1
SOP-4.18	ERD Document Control	Rev. 0
SOP-5.1	Data Management Chain of Custody and Printed Analytical Result Receipt and Processing	Rev. 3
SOP-5.3	Data Management Electronic Analytical Result Receipt and Processing for Sample, Analysis, and QC Data	Rev. 3
SOP-5.4	Data Management Hand Entry of Analytical Results	Rev. 2

Revised Table of Contents reflects revisions and updates to the "September 2006 SOP Manual." The following SOPs have been revised: 1.12, 2.1, 2.2, 2.3, 2.4, 2.5, 2.6, 2.7, 2.9, 2.10, 2.13, 4.1, 4.3, 5.1, 5.3, 5.4, 5.6, 5.8, 5.10, 5.14, and 5.15. SOPs 4.10 and 6.1 have been added and SOP 5.2 has been deleted (it was combined with SOP 5.1).

04-09/ERD:gl

SOP-5.5 Data Management Revision Receipt and Processing ..... Rev. 1
SOP-5.6 Ground Water Elevation Reports ..... Rev. 1
SOP 5.8 Field Logbook Control ..... Rev. 3
SOP-5.10 Data Management Receipt and Processing Lithology by Electronic Transfer .. Rev. 3
SOP-5.14 Issuing New Parameter Codes ..... Rev. 1
SOP 5.15 Preparation of Required Routine Groundwater and Treatment Facilities Sampling Plans ..... Rev. 1
SOP-5.20 Cost Effective Sampling (CES) Algorithm Preparation ..... Rev. 0
SOP-6.1 Decontamination and Decommissioning (D&D) Team - Standard Operating Procedure ..... Rev. 2
SOP Glossary ..... Rev. 6

Revised Table of Contents reflects revisions and updates to the "September 2006 SOP Manual." The following SOPs have been revised: 1.12, 2.1, 2.2, 2.3, 2.4, 2.5, 2.6, 2.7, 2.9, 2.10, 2.13, 4.1, 4.3, 5.1, 5.3, 5.4, 5.6, 5.8, 5.10, 5.14, and 5.15. SOPs 4.10 and 6.1 have been added and SOP 5.2 has been deleted (it was combined with SOP 5.1).

04-09/ERD:gl

LLNL Environmental Restoration Division (ERD)
Standard Operating Procedure (SOP)

ERD SOP 1.1: Field Borehole Logging—Revision: 5

AUTHOR(S):
R. Davis

ENVIRONMENTAL RESTORATION DIVISION
CONTROLLED COPY
_____
THIS IS A RED STAMP
ERD

APPROVALS:	Date
Jesse Lyon Division Leader	8/30/06
Rick Huff Hydrogeology & Decision Support Group Leader	8/10/06

CONCURRENCE:	Date
Rebecca Goodrich QA Implementation Coordinator	8/10/06

1.0 PURPOSE

The purpose of this SOP is to describe the physical characteristics of sediments and rock encountered during auger, rotary, punch core or core drilling and to document the procedures used during geophysical logging and the collection of subsurface samples for chemical analysis.

2.0 APPLICABILITY

The following procedures should be reviewed and followed by all personnel performing any borehole logging activities. ERD work activities are conducted within the framework of the institutional Integrated Safety Management System (ISMS). The Environmental Management System (EMS) is a component of the ISMS, which is also supported during the planning, performing, and evaluation of the work processes.

3.0 REFERENCES

3.1 American Society for Testing and Materials (1999), *Standard Test Method for Penetration Test and Split-Barrel Sampling of Soils*, ASTM D1586-99, Vol. 04.08.

3.2 American Society for Testing and Materials (2006), *Standard Practice for Rock Core Drilling and Sampling of Rock for Site Investigation*, ASTM D2113-06, Vol. 04.08.

3.3 American Society for Testing and Materials (2000), *Standard Practice for Description and Identification of Soils (Visual-Manual Procedure)*, ASTM D2488-00, Vol. 04.08.

3.4 Department of Health and Human Services, Centers for Disease Control and Prevention (2005), *NIOSH Pocket Guide to Chemical Hazards*, Superintendent of Documents, U.S. Government Printing Office, Washington, D.C. 20402.

3.5 Environmental Protection Agency (1987), *A Compendium of Superfund Field Operations Methods*, EPA/540/P-87/001.

3.6 Johnson, R. B., and DeGraff, J. V. (1988), *Principles of Engineering Geology*, John Wiley and Sons, New York.

3.7 Terzaghi, K., Peck, R. B., and Mesri, G. (1996), *Soil Mechanics in Engineering Practice,* 3rd ed., John Wiley and Sons, New York.

4.0 DEFINITIONS

See SOP Glossary.

5.0 RESPONSIBILITIES

5.1 Division Leader (DL)

The DL's responsibility is to ensure that all activities performed by ERD at the Livermore Site and Site 300 are performed safely and comply with all pertinent regulations and procedures, and provide the necessary equipment and resources to accomplish the tasks described in this procedure.

5.2 Project Leader (PL)

The PL's responsibility is to ensure that all activities are performed safely and comply with all pertinent regulations and procedures, work is authorized through an IWS, institution requirements of the Findings and Determination are followed, and there is sufficient funding to initiate the work.

5.3 Hydrogeology & Decision Support Group Leader (HDSGL)

The HDSGL's responsibility is to ensure that proper procedures are followed for activities (e.g., drilling, borehole logging and sampling, monitor well installations and development).

5.4 Hydrogeologist (HG)

The HG is responsible for the overall investigation, planning, assessment, and remediation within a study area, including decisions regarding borehole

depths and well specifications. The HG is also responsible for arranging the review of borehole and geophysical logs.

5.5 Site Safety Officer (SSO)

The SSO's responsibility is to ensure that fieldwork is conducted safely and in compliance with applicable IWSs, Site Safety Plans, and any other applicable safety related documentation.

5.6 Drilling Coordinator (DC)

The DC provides the interface between the Project Leader, HDSGL, Hydrogeologist (HG), and the field activities and is responsible for coordinating the borehole logging activities with the Drilling Geologist (DG).

5.7 Drilling Geologist Supervisor (DGS)

The DGS is responsible for assisting in the preparation of the Drilling Work Plan and/or Sampling Plan prior to commencing related work activities; coordinating geologist schedules and related activities, equipment needs, and monitoring the progress of daily activities.

5.8 Drilling Geologist (DG)

The DGS coordinates the geologist schedules and related activities, equipment needs, and the progress of daily activities.

5.9 Data Management Team (DMT)

The DMT is responsible for the disposition of the original documents received as a result of performing work activities described by this SOP.

6.0 PROCEDURES

6.1 Preparation

6.1.1 Prior to field borehole logging, perform the applicable preparation activities described in SOP 4.1, "General Instructions for Field Personnel". Personnel who are new to the LLNL project will receive direct field supervision and on-the-job training (OJT) from a Subject Matter Expert (SME) for at least the first 24 hours of field activity using the ERD Field Investigation Orientation Lesson Plan (course number EP7033-05).

6.1.2 Obtain materials listed in the Drilling Geologist Equipment Checklist (Attachment A) and obtain the appropriate personal protection equipment (PPE) (SOP 4.1).

6.1.3 Review the drilling workplan and meet with the HG to determine scope of work and logging intervals.

6.2 Safety Considerations

6.2.1 Prior to conducting work in an uncharacterized area or where high concentrations of contaminants are suspected that cannot be effectively monitored using a photoionization detector (PID) or flame ionization detector (FID), contact the Environmental Safety & Health (ES&H) Team 4 to conduct a survey if necessary. Regularly monitor drill cuttings and work area for VOCs. Cease drilling operations and contact the Site Safety Officer (SSO), HDSGL, DC, DGS, and/or the ES&H Team 4 when:

- Readings exceed the time-weighted average (TWA) values, or exceed half of the threshold limit values (TLV) for known or suspected chemicals (see Attachment B for selected contaminant exposure limits),
- Breathing zone concentrations recorded by the field monitoring exceed twice background concentrations,
- 5 ppm is measured in the absence of background concentrations, or
- There is evidence of contamination that could impact worker health and safety.

6.2.2 Depending on location, an alpha-beta meter may be used by the ES&H Team 4 to monitor area.

6.2.3 To ensure safety to the workers and the environment, the procedures described in the following sections will be conducted in accordance with LLNL Integration Work Sheet (IWS) 12654 "Drilling in VOC and Mixed Waste-Contaminated Soils at the Livermore Site" and IWS 11578 "Drilling in VOC-Contaminated Soils at the Livermore Site." Drilling activities at Site 300 will be conducted in accordance with IWS 12684 "Site 300 Drilling Activity."

6.3 Logging Procedure

Field borehole logging is one aspect of drilling operations. Other aspects are covered in SOPs 1.2, "Borehole Sampling of Unconsolidated Sediments and Rock;" 1.3, "Drilling;" 1.4, "Monitor Well Installation;" and 1.5, "Monitor Well Development." Every borehole should be logged whether or not a monitoring well will be installed. If coring is not conducted while drilling, cuttings should be logged while allowing for lag time due to depth. Lithologic contacts should be estimated based upon lithology changes and drill rig behavior. If continuous coring is conducted, the core should be logged while in the polyvinyl chloride (PVC) tray, unless otherwise instructed per Drilling Work Plan and/or Sampling Plan or the HG.

6.3.1 Auger Drilling

1. Observe cuttings and note drill rig behavior.
2. Collect split-barrel sample or continuous core as directed in the field.

6.3.2 Wireline Coring

1. Attempt continuous coring if possible.
2. Observe drill cutting composition, mud/water or cutting color changes, fluid pressure, and rig behavior when there is potential partial core recovery.

6.3.3 Rotary Drilling

1. Observe cuttings, note drill rig behavior, fluid pressure, and mud or water color changes. Obtain input from driller if uncertain about lithology intervals.
2. Collect split-barrel or punch core as directed in the field protocol.

6.4 Borehole/Well Construction Log Completion Procedure

Complete the Borehole/Well Construction Log as described below. Attachment C is an example of a blank boring log. The last digit in each Subsection below corresponds to the numbers listed in parentheses in Attachment C of this SOP. For example, the first description, 6.4.1 Borehole Location, should be entered in the space marked **(1)** BOREHOLE LOCATION on the blank boring log (Attachment C).

6.4.1 **Borehole Location**. Indicate on a map, the borehole location with respect to permanent natural and man-made features and any existing nearby wells. When feasible, record distance to at least two permanent locations or one location when directional (i.e., compass bearing) data are provided. Show a north arrow preferably oriented toward the top of the page.

6.4.2 **Project**. Identify the project as Lawrence Livermore National Laboratory (LLNL) Site 300 or Livermore Site. In addition, include the general area in which the borehole is located (e.g., off site, Building 834, T-5475).

6.4.3 **Borehole/Well Number**. The borehole/well number as provided by the approved Drilling Work Plan and/or Sampling Plan.

6.4.4 **Job Number**. Identifies the account number for the project.

6.4.5 **Logged By**. Identifies the individual(s) responsible for logging the borehole, performing field measurements, and collecting samples.

6.4.6 **Edited By**. Identifies the geologist who independently reviews and checks the boring/well log entries.

6.4.7 **Project Manager**. Identifies the HG.

6.4.8 **Drill Rig**. Identifies drill rig manufacturer and model.

6.4.9 **Drilling Contractor**. Identifies the drilling company and its city of origin.

6.4.10 **Driller/Helper**. Identifies drill rig operator and helper(s).

6.4.11 **Drilling Method**. Identifies the method(s) used to drill the borehole.

6.4.12 **Sample Method**. Identifies the method(s) used to collect lithologic and chemical samples.

6.4.13 **Hammer Weight/Drop**. The drive sampler hammer weight in pounds and drop distance in inches for the hammer used to advance drive samplers. If a hammer is not used, enter NA (not applicable).

6.4.14 **Bentonite Gel Used**. Indicate whether or not bentonite gel was used as a drilling fluid. If so, identify the product name and manufacturer. No polymer-bearing drilling fluid additives shall be used unless approved in advance by the Environmental Chemistry and Biology Group Leader.

6.4.15 **Borehole Diameter**. Diameter of final borehole in inches and tenths of an inch. Also note diameter of any pilot boreholes drilled.

6.4.16 **Borehole Started Time/Date**. Identifies time (24 h) and date when drilling began.

6.4.17 **Borehole Completed Time/Date**. Identifies time (24 h) and date when pilot borehole is drilled to total depth.

6.4.18 **Water Source**. Indicates whether or not water was introduced into the borehole during drilling and/or into the well during initial development. If so, identifies the source (e.g., fire hydrant location, faucet, and number).

6.4.19 **Well Construction Started Time/Date**. Identifies the time (24 h) and date when well construction begins, including reaming the pilot borehole in preparation for well construction.

6.4.20 **Well Construction Completion Time/Date**. Identifies time (24 h) and date when well installation is complete (placement of first grout lift). If well is abandoned, note as such.

6.4.21 **Well Head Completion**. Identifies the proposed type of well head completion (e.g., locking 9-in. diameter galvanized steel pipe ["stove pipe"] or Christy box).

6.4.22 **Depth to Water**. Water levels in boreholes should be recorded when water is first encountered during drilling and then at least once after drilling has been completed or a piezometer and/or monitor well has been installed. Before taking water level measurements, review SOP 3.1, "Water-Level Measurements." Include borehole/casing depth, water depth, time, and date using ground surface as the datum.

6.4.23 **Total Depth**. Record total depth of borehole in feet.

6.4.24 **Casing Depth**. Record total depth of well casing in feet.

6.4.25 **Screened Interval**. Include depth interval of perforated casing section in feet.

6.4.26 **Sandpack**. List depth interval of filter pack sand and fine sand in feet. Include manufacturer name and designation of sand.

6.4.27 **Well Development**. Identifies the method(s), and time (24 h), date, and estimated flow rate in gallons per minute (gpm) when initial well development was completed.

6.4.28 **Geophysical Logs**. Identify geophysical logging company, method(s), and date. If geophysical logging is not performed during initial drilling and well installation, enter NA (not applicable).

6.4.29 **Circulation**. Volume of fluid losses and the interval over which they occur. When the column is left blank, it indicates that no fluid loss was observed. Complete fluid loss (CL) means that no fluid returned to the surface during pumping. If possible, give quantitative estimates of major fluid losses (rate: in gpm, or estimate of total gallons lost). Although the above mentioned circulation loss applies primarily to air and mud rotary systems, it can also be used during auger drilling to indicate quantity of return of cuttings at the surface.

6.4.30 **OVA/PID Field Readings**. Record Organic Vapor Analyzer (OVA) or PID readings. The work area (breathing zone) should be monitored with the OVA/PID for each core run. A portion of each soil/rock sample submitted for analysis should also be monitored with the OVA/PID after being containerized in a plastic bag for 15 minutes.

6.4.31 **Sampler Type/Depth**. Give sampler type by the letter code listed below and identify the depth at the top of the sampling interval in feet below ground surface (bgs).

Sampler type	Inside diameter (in.)	Code
Standard penetrometer	1.38	SP
Split-barrel (small)	2.0	SBS
Split-barrel (large)	2.5	SBL
HQ wireline core	2.3	PC

6.4.32 **Blows/6 inches**. The number of blows required to drive the sampler 6 in. by a 140-lb hammer falling 30 in. Fifty blow counts per 6-in drive is considered "refusal," and sampling at this depth is usually terminated. In addition, a total of 100 blow counts per 18-in. drive, or no observed advance of the sampler during ten successive hammer blows, is also considered "refusal." During coring, leave this section blank. Normally, the second and third 6-in. intervals are recorded and added as the number of blows per feet.

6.4.33 **Inches Recovered/Inches Driven**. The length in inches of sediment or rock recovered on a sampling or core run divided by the length in inches the sampler is advanced. For example, a recovery ratio for 10 in. of recovery on a 18-in. sampling interval for a core run would be:

$$\frac{10}{18}.$$

6.4.34 **Sample Condition/Rock Quality Designation (RQD)**. Indicates the estimated quality of the sample for analysis: P = poor, F = fair, G = good, E = excellent. When rock coring, the RQD is reported in the unreduced fraction form. The numerator is the length in inches of intact core 4 inches or greater in length, and the denominator is the length of the core run in inches.

6.4.35 **Sample Identification (ID)**. Depth at the top of the sampling interval is given in feet and tenths of feet. The date and time of the sample is also given.

Livermore Site:

For soil samples collected at the Livermore Site, the sample designation distinguishes between unsaturated samples (B-#-depthU) and saturated samples (B-#-depthS). For example, a soil sample collected from borehole B-1604 at a depth of five feet in the unsaturated zone would be identified as B-1604-5.0U.

Site 300:

For soil samples collected at Site 300, no designation is made between unsaturated and saturated; instead, the sample name ends in "F" (for feet). For example, a soil or rock sample collected from borehole B-865-2133 at a depth of five feet would be identified as B-865-2133-5.0F.

Duplicate soil samples that are collected for quality control (QC) are to be named according to the following example: B-865-05-(150.3)-DUP-150.0F, where 150.3 is the depth of the real sample and 150.0 is the depth of the QC sample.

Ground water grab samples collected from the open borehole (before well installation) are to be named as in the following example: B-865-05-BGW-52.0F where 52.0 is the borehole depth at the time of sample collection.

6.4.36 **Analysis**. Identifies laboratory analysis to be performed on sample.

6.4.37 **Well Annulus/Borehole Filler**. Identifies the type of material used to fill the annulus space between the well and borehole wall (e.g., Monterey #3 sand, 0/30 sand, bentonite pellets, portland cement grout). Identifies the type of material used as borehole filler, either for backfill below the well bottom or for abandoning the borehole, if required (e.g., portland cement grout, bentonite chips, etc.). Material names are written vertically and arrows are drawn from the material name to the upper and lower contacts with adjacent materials.

6.4.38 **Well Casing**. Identifies the casing and screen used to construct the well. Casing and screen identification should include type of material (PVC, steel, etc.), schedule (Sch 40, Sch 80, etc.), and diameter. Screen identification should also include slot size (e.g., 0.02-inch). The well cap location should be noted. Casing and screen descriptions are written vertically and arrows are drawn from the description to the upper and lower contacts with adjacent descriptions.

6.4.39 **Depth in Feet**. Identifies the depth in feet. The depth on all pages other than the first page should be filled out by the drilling geologist in the field.

6.4.40 **Recovery/Sample Location**. Core recovery is shown graphically by an "x" in the recovery column on the log. The location of a sample collected for further evaluation is shown by a solid box. When partial sample loss occurs, it is often possible to determine why and where core loss has occurred. For example:

1. Rock stuck in drive shoe.

2. Coring from dense (stiff) material to soft material causing block-off.

3. Loss of cohesionless material.

4. Fell out during retrieval of core sampler.

5. Mechanical failures.

Note: If uncertain where sample loss has occurred, recovered interval is assumed to be from the top of the sampling interval.

6.4.41 **Contact**. Lithologic contacts are drawn in the contact column and extended across the lithologic description field. If the contact is identified by the driller, specify this in the lithologic description field. Three types of contacts are used:

1. Sharp. A sharp contact is indicated with a solid line.
2. Gradational. A gradational contact is indicated with hatches.
3. Approximate. An approximate contact is indicated by a dashed line and is used when the exact depth or nature of the lithologic contact is uncertain.

6.4.42 **Lithologic Description**. A continuous log of encountered geologic materials determined from borehole cuttings, samples, and core should be recorded on the Borehole/Well Construction Log. A system of description similar to the American Society for Testing and Materials (ASTM) method D 2488-90 (2000), *Standard Practice for Description and Identification of Soils* (Visual-Manual Procedure), is used for sediment, and a similar description is used for rock. Lithologic descriptions record direct field observations. Any interpretations included with these descriptions should be clearly noted by placing the interpretation in parentheses. Appendix C includes a completed Borehole/Well Construction Log. The format is outlined below:

A. Fine-Grained Sediment Description Format.

1. Contact depth in feet and tenths of a foot. For example, "(0'–5.1')."
2. Textural Classification. The appropriate classification as listed in Attachment D. For example, "Sandy Silt."
3. Group Symbol. The appropriate Unified Soil Classification System (USCS) sediment group symbol as listed in Attachment E is written in parentheses after the textural classification. For example, "(ML)."
4. Color. Soil color is named and coded using the Munsell Soil Color chart. The code should be in parentheses immediately following the written description. For example, "reddish brn (5YR, 4/4)." Presence of mottling and banding is also recorded.
5. Consistency/Penetration Resistance. For fine sediments use very soft, soft, medium, stiff, very stiff, and hard. These are estimated from drive sample hammer blows or other field tests. Blow counts may also be used, if reliable.

6. Moisture Content. Dry, damp, moist, wet (saturated). Attachment F contains a description for each moisture term. Omit moisture terms below the saturated zone and when drilling with mud or air-mist rotary systems.
7. Size Distribution. Approximate percentage of gravel, sand, fines (if possible, distinguish between silt and clay). Percentages should add up to 100%. For example, "80% silt, 20% f-sand."
8. Estimated Permeability. Very low, low, moderate, or high. These are based primarily on grain size and sorting. See Section 6.4.44 for abbreviations used for estimated permeability. For example, "LEK."
9. Miscellaneous. Odor, contact and/or bedding dip, bedding features, cementation, structures, fractures, fracture fillings, fossils, formation name, minerals, oxidation, etc.

B. Coarse-Grained Sediment Description Format.

1. Contact depth in feet and tenths of a foot. For example, "(0'–5.1')."
2. Textural Classification. The appropriate textural classification as listed in Attachment D. For example, "Silty Gravel."
3. Group Symbol. The appropriate Unified Soil Classification System (USCS) sediment group symbol as listed in Table Attachment E is written in parentheses after the textural classification. For example, "(GM)."
4. Color. Soil color is named and coded using the Munsell Soil Color chart. The code should be in parentheses immediately following the written description. For example, "dk brn (7.5 YR, 3/4)." Presence of mottling and banding is also recorded.
5. Relative Density/Penetration Resistance. For cohesionless materials use very loose, loose, medium, dense, or very dense estimated from drive sample hammer blows or other field tests. Blow counts may be used, if reliable.
6. Moisture Content. Dry, damp, moist, and wet (saturated). Attachment F contains a description for each moisture term. Omit moisture terms below the regional water table and when drilling with mud or air-mist rotary systems.
7. Size Distribution. Approximate percentage of gravel, sand, and fines (silt and clay). Percentages should add up to 100%. For example, "80% gravel, 20% silt."
8. Grain Shape. Angular, subangular, subrounded, rounded, or well-rounded, for grains larger than sand size.
9. Grain Size. The largest cross-sectional dimension measured in tenths of an inch for grains larger than sand size.

10. Estimated Permeability. Very low, low, moderate, or high. This is based primarily on grain size and sorting. See Section 6.4.44 for abbreviations used for estimated permeability. For example, "HEK."

11. Miscellaneous. Odor, contact and/or bedding dip, bedding features, sorting, structures, fossils, cementation, geologic origin, formation name, minerals, oxidation, etc.

C. Fine-Grained Rock Description Format

1. Contact depth in feet and tenths of a foot. For example, "(76.5'–80')."

2. Textural Classification. The appropriate classification as listed in Attachment D. For example, "Sandy Siltstone."

3. Color. Rock color is named and coded using the Geological Society of America rock color chart. The code should be in parentheses immediately following the written description. For example, "gry grn (5G, 5/2)." Presence of mottling and banding is also recorded.

4. Hardness. Very hard, hard, medium, soft, very soft. Attachment G contains a description for each hardness term.

5. Moisture Content. Dry, damp, moist, wet (saturated). Attachment F contains a description for each moisture term. Omit moisture terms below the saturated zone and when drilling with mud or air-mist rotary systems.

6. Size Distribution. Approximate percentage of gravel, sand, and fines (silt and clay). Percentages should add up to 100%. For example, "80% silt, 20% f-sand."

7. Estimated Permeability. Very low, low, moderate, or high. This is based primarily on grain size, sorting, and cementation. Estimate secondary permeability due to natural rock fractures when applicable. For example, "LEK." See Section 6.4.44 for abbreviations used for estimated permeability.

8. Miscellaneous. Odor, contact and/or bedding dip, cementation, bedding, inclusions, secondary mineralization, fossils, structures, formation name, and fractures.

9. Fractures are identified by depth, angle, width, and associated mineralization if applicable. The interpretation of the fracture type (i.e., as natural [N], coring induced [CI], or handling induced [HI]) should be stated. For example, "NF @90.8', 25 deg to axis, 0.1" wide, minor calcite."

D. Coarse-Grained Rock Description Format

1. Contact depth in feet and tenths of a foot. For example, "(122'–125.7')."

2. Textural Classification. The appropriate classification as listed in Attachment D. For example, "Sandstone."

3. Color. Rock color is named and coded using the Geological Society of America rock color chart. The code should be in parentheses immediately following the written description. For example, "gry olive grn (5GY, 3/2)." Presence of mottling and banding is also recorded.

4. Hardness. Very hard, hard, medium, soft, very soft. Attachment G contains a description for each hardness term.

5. Moisture Content. Dry, damp, moist, and wet (saturated). Attachment F contains a description for each moisture term. Omit moisture terms below the saturated zone and when drilling with mud or air-mist rotary systems.

6. Size Distribution. Approximate percentage of gravel, sand, and fines (silt and clay). Percentages should add up to 100%. For example, "80% c-sand, 20% silt."

7. Grain Shape. Angular, subangular, subrounded, rounded, or well-rounded, for grains larger than sand size.

8. Grain Size. The largest cross-sectional dimension measured in tenths of an inch for grains larger than sand size.

9. Estimated Permeability. Very low, low, moderate, or high. This is based primarily on grain size, sorting, and cementation. When applicable, estimate secondary permeability due to natural rock fractures. For example, "HEK." See Section 6.4.44 for abbreviations used for estimated permeability.

10. Miscellaneous. Odor, contact and/or bedding dip, cementation, bedding, inclusions, secondary mineralization, fossils, structures, formation name, and fractures.

11. Fractures are identified by depth, angle, width, and associated mineralization, if applicable. The interpretation of the fracture type (i.e., as natural [N], coring induced [CI], or handling induced [HI]), should be stated. For example, "NF @126.1', 35 deg to axis, 0.1" wide, minor calcite"

6.4.43 **Abbreviations Used for Lithologic Descriptions:**

PC = punch core
RC = rock core
v = very
f = fine
m = medium
mod = moderate
c = coarse
min = mineralization

w/ = with
SA = subangular
SR = subrounded
R = rounded
A = angular
soft sed = soft sediment deformation
def'm = deformation
DF = drilling fluid (mud)
x-beds = cross beds
@ = at
RQD = rock quality designation
ppm = parts per million
rx w/HCl = reaction with hydrochloric acid
FeOx = iron oxide
MnO2 = manganese oxide
P = plasticity

6.4.44 **Abbreviations Used for Permeability Estimates**

1 K = primary conductivity
2 K = secondary conductivity due to fracturing, mineralization, etc.
H = high
L = low
E = estimated
K = Hydraulic conductivity

6.4.45 **Core Fractures are Described as Follows:**

(Depth/fracture type (see below)/angle w/mineralization or other characteristics)
CIF = coring induced fracture
HIF = handling induced fracture
NF = natural fracture
HF = healed fracture

6.4.46 **General Abbreviations:**

DA = Drill Ahead
NR = No Recovery
dk = dark
lt = light
ylw = yellow/yellowish
brn = brown/brownish
grn = green/greenish
gry = gray/grayish
blk = black
bl = blue
ind = indurated
cmt = cemented
calc = calcite
qtz = quartz

SS = split spoon
S = sub
//////// = Gradational Contact
------- = Approximate Contact
_____ = Definite Contact

6.5 Post Operation

6.5.1 Store recovered sediment and rock core in core boxes using a black indelible pen to mark sample intervals/runs. Label each box with the location ID, site/OU, depth interval, and box number. Handle core per SOP 1.15, "Well Site Core Handling."

6.5.2 Perform post-work activities described in SOP 4.1, Section 6.4.

6.5.3 Deliver original copies of Borehole/Well Construction Log, Well Development Form, Field Logbook, and all other relevant forms and information to the quality control reviewer for review. After the review, edit documents and copy and distribute files. Deliver final versions of original documents to DMT.

7.0 QUALITY ASSURANCE RECORDS

7.1 Borehole/Well Construction Log

7.2 Field Logbook

8.0 ATTACHMENTS

Attachment A—Drilling Geologist Equipment Checklist

Attachment B—Exposure Limits for Selected Contaminants (Table B-1)

Attachment C—Borehole/Well Construction Log

Attachment D—Textural Classifications (Table D-1)

Attachment E—Unified Soil Classification System (USCS) Group Symbols (Table E-1)

Attachment F—Moisture Classifications (Table F-1)

Attachment G—Rock Hardness Classification (Table G-1)

Attachment A

Drilling Geologist Equipment Checklist

Drilling Geologist Equipment Checklist

____ 300-ft weighted measuring tape
____ Any applicable permits (e.g., excavation, utility clearance, burn permits)
____ Applicable documents (e.g., SSP, IWSs, SOPs, work plan, sample plan)
____ Appropriate clothing (e.g., coveralls, steel-toed safety shoes, gloves)
____ Barricades/traffic cones
____ Buckets and brushes
____ Caution tape
____ Company ID sign for vehicle
____ Cooler with ice
____ Core boxes (tops, center dividers, bottoms)
____ Deionized water
____ Detergents (e.g., Alconox, Liquinox, TSP)
____ Disposable Teflon or polyethylene bailers
____ Document control logbook
____ Duct tape
____ Field forms (i.e., borehole/well construction forms, COC forms, daily field report forms)
____ Field notebook
____ Fire extinguisher
____ First aid kit
____ Geological Society of America rock color chart
____ Glass jar
____ Grain-size sieves
____ Hand lens (loop)
____ Hard hat
____ Hearing protection
____ Imhoff cone
____ Knife
____ Measuring wheel, measuring tape or ruler (engineering scale–10ths of feet)
____ Munsell soil/rock color chart
____ Nitrile or latex sampling gloves
____ Organic vapor meter (OVM, PID, or FID) or gamma beta meter if required
____ pH paper
____ Plastic bags
____ Permanent marking pen
____ Personnel Protective Equipment
____ Protractor
____ Rock hammer
____ Safety glasses
____ Safety shoes
____ Sample containers/labels

____ Sampling gloves (vinyl, latex, or nitrile, as appropriate)

____ Signs listing responsible persons, restricted entry, hearing protection/hard hat/safety glasses/safety shoes required

____ Soil sample tubes/caps

____ Steel measuring tape with engineering scale

____ Steel spatula or putty knife

____ Stopwatch or watch with second hand

____ String

____ Teflon tape (4 in. wide)

____ Water-level meter

____ Zip-Loc plastic bags

Attachment B

Exposure Limits for Selected Contaminants

Table B-1. Exposure limits for selected contaminants.

Chemical name	Exposure limits (TWA[b])	IDLH[c]
Arsenic[a]	0.002 mg/m^3[d] [15 min]	5 mg/m^3
Barium[a]	0.5 mg/m^3	50 mg/m^3
Benzene[a]	0.1 ppm	500 ppm
	1 ppm[e]	
Freon 113	1000 ppm	2,000 ppm
	(7600 mg/m^3)	
	1250 ppm[e]	
	(9500 mg/m^3)	
Tetrachloroethylene	25 ppm	150 ppm
Toluene	100 ppm	500 ppm
	(375 mg/m^3)	
	150 ppm[e]	
	(560 mg/m^3)	
Trichloroethylene	25 ppm	1,000 ppm
Uranium[a]	0.2 mg/m^3	10 mg/m^3
	0.6 mg/m^3[e]	

[a] Contaminants cannot be effectively monitored in the field using a PID or FID. Contact ES&H Team 4 to conduct a survey if working in an uncharacterized area or where high levels of these contaminants are suspected.

[b] Time-weighted average (TWA) concentrations for up to a 10-h workday during a 40-h workweek, unless noted otherwise.

[c] Immediately Dangerous to Life or Health concentrations.

[d] Indicates a ceiling value which should not be exceeded at any time.

[e] Short-term exposure limit is a 15-min TWA exposure that should not be exceeded at any time during a workday.

Note: See reference 3.7 for more information.

Attachment C

Borehole/Well Construction Log

Borehole/Well Construction Log

(1) BOREHOLE LOCATION	**(2)** Project:	**(3)** Borehole/Well No.:
		(4) Job No.:
	(5) Logged By:	**(6)** Edited By:
	(7) Project Manager:	**(8)** Drill Rig:
	(9) Drilling Contractor:	
	(10) Driller/Helper:	
	(11) Drilling Method:	**(12)** Sample Method:
	(13) Hammer Weight/Drop:	**(14)** Bentonite Gel Used:
	(15) Borehole Diameter, Pilot:	Final:
	(16) Borehole Started, Time/Date:	**(17)** Borehole Completed, Time/Date: **(18)** Water Source:
Notes:	**(19)** Well Started, Time/Date:	**(20)** Well Completed, Time/Date:
	(22) Water Depth / Boring/Casing Depth / Time / Date	**(21)** Well Head Completion

ABBREVIATIONS: ------- = Approx. Contact; //////// = Gradational Contact; @ = at; _____ = Definite Contact; 1 K = primary conductivity; 2 K = secondary conductivity due to fracturing, mineralization, etc.; A = angular; bl = blue; blk = black; brn = brown/brownish; c = coarse; calc = calcite; CIF = coring induced fracture; cmt = cemented; DA = Drill Ahead; def'm = deformation; DF = drilling fluid (mud); dk = dark; E = estimated; f = fine; FeOx= iron oxide; grn = green/greenish; gry = gray/grayish; H = high; HF = healed fracture; HIF = handling induced fracture; ind = indurated; K = Hydraulic conductivity; L = low; lt = light; m = medium; min = mineralization; MnO2 = manganese oxide; mod = moderate; NF = natural fracture; NR = No Recovery; P = plasticity; PC = punch core; ppm = parts per million; qtz = quartz; R = rounded; RC = rock core; RQD = rock quality description; rx w/HCI = reaction with hydrochloric acid; S = sub; SA = subangular; soft sed = soft sediment deformation; SR = subrounded; SS = split spoon; v = very; w/ = with; x-beds = cross beds; ylw = yellow/yellowish.

(23) Total Depth: **(24)** Casing Depth:
(25) Screened Interval:
(26) Sand Pack, #3 #0/30:
(27) Well Development Method:
Time: Date: Flow Rate:
(28) Geophysical Logs, Type: **(29)** Circulation:
By: Date

(30) OVA/PID Field Readings (ppm)		**(31)**	**(32)**	**(33)**	**(34)**	**(35)**	**(36)**	**(37)**	**(38)**	**(39)**	**(40)**	**(41)**	**(42)** LITHOLOGIC DESCRIPTIONS
Work Area	Soil/Rock	Sampler Type/Depth	Blows 6 inches	Inches Recovered/Inches Driven	(Sample Condition/RQD	Sample ID	Analysis	Well Annulus/Borehole Filler	Well Casing	Depth in Feet	Recovery/Sample Loc.	Contact	
										1			
										2			
										3			
										4			
										5			
										6			
										7			
										8			
										9			
										10			

Note: Numbers **1–42** listed on this log correspond to Subsections **6.4.1–6.4.42** of SOP 1.1.

ABBREVIATIONS ------- = Approx. Contact; //////// = Gradational Contact; @ = at; _____ = Definite Contact; 1 K = primary conductivity; 2 K = secondary conductivity due to fracturing, mineralization, etc.; A = angular; bl = blue; blk = black; brn = brown/brownish; c = coarse; calc = calcite; CIF = coring induced fracture; cmt = cemented; DA = Drill Ahead; def'm = deformation; DF = drilling fluid (mud); dk = dark; E = estimated; f = fine; FeOx = iron oxide; grn = green/greenish; gry = gray/grayish; H = high; HF = healed fracture; HIF = handling induced fracture; ind = indurated; K = Hydraulic conductivity; L = low; lt = light; m = medium; min = mineralization; MnO2 = manganese oxide; mod = moderate; NF = natural fracture; NR = No Recovery; P = plasticity; PC = punch core; ppm = parts per million; qtz = quartz; R = rounded; RC = rock core; RQD = rock quality description; rx w/HCI = reaction with hydrochloric acid; S = sub; SA = subangular; soft sed = soft sediment deformation; SR = subrounded; SS = split spoon; v = very; w/ = with; x-beds = cross beds; ylw = yellow/yellowish.

(30) OVA/PID Field Readings (ppm)		**(31)**	**(32)**	**(33)**	**(34)**	**(35)**	**(36)**	**(37)**	**(38)**	**(39)**	**(40)**	**(41)**	**(2)** Project:	**(3)** Borehole/Well No.:
Work Area	Soil/Rock	Sampler Type/Depth	Blows 6 inches	Inches Recovered/Inches Driven	Sample Condition/RQD	Sample ID	Analysis	Well Annulus/Borehole Filler	Well Casing	Depth in Feet	Recovery/Sample Loc.	Contact	Notes:	
										1				
										2				
										3				
										4				
										5				
										6				
										7				
										8				
										9				
										10				
										1				
										2				
										3				
										4				
										5				
										6				
										7				
										8				
										9				
										10				

Note: The numbers listed in parentheses on this log correspond to the Subsections listed in Section 6.4 of SOP 1.1 [i.e., **(2)** = **6.4.2**, etc.].

Attachment D

Textural Classifications

Attachment D-1. Textural classifications for the Livermore Site and Site 300.

Type	Classification
Sediment:	
Fine grained	Gravelly silt, sandy silt, silt, clayey silt, sandy clay, silty clay, clay, organic silt, and organic clay.
Coarse grained	Sand, clayey sand, silty sand, gravelly sand, gravel, clayey gravel, silty gravel, and sandy gravel.
Rock:	
Fine grained	Sandy siltstone, siltstone, clayey siltstone, sandy claystone, silty claystone, claystone.
Coarse grained	Sandstone, clayey sandstone, silty sandstone, gravelly sandstone, conglomerate, clayey conglomerate, silty conglomerate, and sandy conglomerate.

Attachment E

Unified Soil Classification System (USCS) Group Symbols

Attachment E-1. USCS sediment symbols.

Fine-grained		Coarse-grained	
Group symbol	Group name	Group symbol	Group name
CL	Low to medium plasticity clays	GW	Well-graded gravel
ML	Nonplastic to medium plasticity silt	GP	Poorly graded gravel
OL	Organic clay or silt (lean)	GM	Silty gravel
CH	High plasticity clays	GC	Clayey gravel
MH	High plasticity silt	SW	Well-graded sand
OH	Organic clay or silt (fat)	SP	Poorly graded sand
PT	Peat	SM	Silty sand
		SC	Clayey sand

Attachment F

Moisture Classifications

Attachment F-1. Moisture classification.

Moisture term	Description
Dry	Absence of moisture to the touch.
Damp	Contains enough water to keep the sample from being brittle, dusty or cohesionless; is darker in color than the same material in the dry state.
Moist	Leaves moisture on your hand, but displays no visible free water.
Wet	Displays visible free water.

Attachment G

Rock Hardness Classification

Attachment G-1. Rock hardness classification.

Descriptive term	Defining characteristics
Very hard	Cannot be scratched with knife; does not leave a groove on the rock surface when scratched.
Hard	Difficult to scratch with knife; leaves a faint groove with sharp edges.
Medium	Can be scratched with knife; leaves a well-defined groove with sharp edges.
Soft	Easily scratched with knife; leaves a deep groove with broken edges.
Very soft	Can be scratched with a fingernail.

LLNL Environmental Restoration Division (ERD)
Standard Operating Procedure (SOP)

ERD SOP 1.2: Borehole Sampling of Unconsolidated Sediments and Rock—Revision: 5

AUTHOR(S):
R. Davis

ENVIRONMENTAL RESTORATION DIVISION
CONTROLLED COPY
_____
THIS IS A RED STAMP
ERD

APPROVALS:	Date
Jesse Lyon **Division Leader**	8/30/06
_____ **Hydrogeology & Decision Support Group Leader**	8/10/06
CONCURRENCE:	**Date**
Rebecca Goodrich **QA Implementation Coordinator**	8/10/06

1.0 PURPOSE

The purpose of this SOP is to ensure acceptable, consistent procedures for collecting discrete soil and rock samples from the vadose zone and several water bearing zones in a single borehole while preventing or minimizing cross contamination of samples.

2.0 APPLICABILITY

This procedure is applicable for all personnel performing borehole sampling, and should be fully reviewed prior to conducting these activities. ERD work activities are conducted within the framework of the institutional Integrated Safety Management System (ISMS). The Environmental Management System (EMS) is a component of the ISMS, which is also supported during the planning, performing, and evaluation of the work processes.

3.0 REFERENCES

3.1 American Society for Testing and Materials (1999), *Standard Test Method for Penetration Test and Split-barrel Sampling of Soils*, ASTM D 1586-99, Vol. 04.08.

3.2 American Society for Testing and Materials (2006), *Standard Practice for Rock Core Drilling and Sampling of Rock for Site Investigation*, ASTM D 2113-06, Vol. 04.08.

3.3 American Society for Testing and Materials (2001), *Standard Practice for Thick Wall, Ring-lined, Split-barrel, Drive Sampling of Soils*, ASTM D 3550-01, Vol. 04.08.

3.4 Dresen, M. D. and Hoffman, F. (1986), *Volatile Organic Compounds in Ground Water West of LLNL*, Lawrence Livermore National Laboratory, Livermore, Calif., July 1986, 46 pp. (UCRL-53740).

3.5 Hoffman, F. and Dresen, M. D. (1989), *A Method to Evaluate the Vertical Distribution of VOCs in Ground Water in a Single Borehole*, Lawrence Livermore National Laboratory, Livermore, Calif., February 1989, 8 pp. (UCRL-100509, Preprint).

4.0 DEFINITIONS

See SOP Glossary.

5.0 RESPONSIBILITIES

5.1 Division Leader (DL)

The DL's responsibility is to ensure that all activities performed by ERD at the Livermore Site and Site 300 are performed safely and comply with all pertinent regulations and procedures, and provide the necessary equipment and resources to accomplish the tasks described in this procedure.

5.2 Project Leader (PL)

The PL's responsibility is to ensure that all activities are performed safely and comply with all pertinent regulations and procedures, work is authorized through an IWS, institution requirements of the Findings and Determination are followed, and there is sufficient funding to initiate the work.

5.3 Hydrogeology & Decision Support Group Leader (HDSGL)

The HDSGL's responsibility is to ensure that proper procedures are followed for activities (e.g., drilling, borehole logging and sampling, well installation and development).

5.4 Hydrogeologist (HG)

The HG is responsible for the overall investigation, planning (includes generating a Drilling Work Plan and/or Sampling Plan), assessment, and remediation within a study area, geologic and hydrogeologic information, and decisions regarding sample depths and analyses required.

5.5 Site Safety Officer (SSO)

The SSO's responsibility is to ensure that fieldwork is conducted safely and in compliance with applicable IWSs, Site Safety Plans, SOPs, and any other applicable safety related documentation.

5.6 Drilling Coordinator (DC)

The DC is responsible for reviewing the Drilling Work Plan and/or Sampling Plan and provides the interface between the DG, Hydrogeologist (HG), and the field personnel.

5.7 Drilling Geologist Supervisor (DGS)

The DGS is responsible for assisting in the preparation of the Drilling Work Plan and/or Sampling Plan prior to commencing related work activities; coordinating geologist schedules and related activities, equipment needs, and monitoring the progress of daily activities.

5.8 Drilling Geologist (DG)

The DG is responsible for reviewing the Drilling Work Plan and/or Sampling Plan and conducting all borehole sampling activities safely and correctly in accordance with the plan(s). All applicable operational and safety procedures are to be followed as per this and related SOPs. The DG should inform the HDSGL, DC, and HG of any non-conformances.

5.9 Quality Assurance Implementation Coordinator (QAIC)

The QAIC's responsibility in respect to this SOP is to review the Drilling Work and/or Sampling Plan distributed by the Hydrogeologist or the Drilling Geologist Supervisor.**5.5**

5.10 Data Management Team (DMT)

The DMT is responsible for reviewing the Drilling Work and/or Sampling Plan and the disposition of original documents received as a result of performing work activities described by this SOP.

6.0 PROCEDURES

Borehole sediment and rock sampling is a useful technique for identifying/characterizing the geology, hydrogeology, and sources of contamination, and delineating contaminant distribution in both the unsaturated and saturated zones.

Methods of sediment sampling include driving split barrel samplers and coring. To facilitate sampling for volatile organic compounds (VOCs) in unconsolidated sediments, standard mud-rotary drilling is employed. In addition, a specialized sampling technique called "Depth Sampling" developed at LLNL (Dresen and Hoffman, 1986; and Hoffman and Dresen, 1989), is used extensively.

It is very important that sampling procedures are followed rigorously so that consistent, high quality analytical data can be obtained. It is essential that the sampling process does not introduce hazardous or foreign substances into the borehole or sample. It is also desirable that the sampling techniques preserve the integrity of all chemicals of interest in their in situ concentrations. In practice, these goals may not be fully achieved because the sample is inevitably disturbed somewhat by the mechanics of drilling, sampling, and handling.

6.1 Preparation

6.1.1 Prepare the Drilling Work Plan and/or Sampling Plan. The plan is prepared by the HG or DGS who should review existing geologic and hydrogeologic information to estimate key parameters (e.g., sample target zones, depth, and thickness and types and concentrations of contaminants, etc.); discuss drilling and sampling strategy; and include number and depth of samples to be collected, sample identification names, turnaround time, analyses, and analytical laboratory.

6.1.2 Review the Drilling Work Plan and/or Sampling Plan. The plans are distributed to the DG, HG, DGS, DC, DMT, and the QAIC to review. The HG or DGS should e-mail the plan to these personnel at least one week before drilling is scheduled to begin. The DG should meet with the HG to discuss site conditions before drilling begins.

6.1.3 Prior to conducting work, perform the applicable preparation activities described in SOP 4.1, "General Instructions for Field Personnel". Personnel who are new to the LLNL project will receive direct field supervision and on-the-job training (OJT) from a Subject Matter Expert (SME) for at least the first 24 hours using the ERD Field Investigation Orientation Lesson Plan (course number EP7033-05).

6.1.4 Obtain materials listed in the Drilling Geologist Equipment Checklist (Attachment A, SOP 1.1, "Field Borehole Logging") and obtain the appropriate personal protection equipment (PPE) (SOP 4.1).

6.1.5 The DG should obtain a Field Sampling Logbook to record sample numbers and Chain-of-Custody (CoC) document numbers per SOP 4.2, "Sample Control and Documentation."

6.2 Safety Considerations

6.2.1 To ensure safety to the workers and the environment, the procedures described in the following sections will be conducted in accordance with LLNL Integration Work Sheet (IWS) 12654 "Drilling in VOC and Mixed Waste-Contaminated Soils at the Livermore Site" and IWS 11578 "Drilling in VOC-Contaminated Soils at the Livermore Site." Drilling activities at Site 300 will be conducted in accordance with IWS 12684 "Site 300 Drilling Activity."

6.3 Split-Barrel Sampling

6.3.1 Wash split-barrel sampler with detergent and analyte-free water provided by the contract analytical laboratories (CALs), and rinse, or steam clean per SOP 4.5, "General Equipment Decontamination." Collect a rinesate/equipment blank, from the interior of the sampler and submit for analysis per SOP 4.9, "Collection of Field QA/QC Samples" when deemed necessary by the HG. The HG shall determine the necessity and frequency of equipment blanks during drilling activities.

6.3.2 Remove cuttings/slough from borehole and center plug.

6.3.3 Sample collection for volatile and semivolatile organic compound analysis:

A. Load precleaned (steam cleaned) brass or stainless-steel tubes into a split-barrel sampler. After the driller is certain all slough is removed from the auger and borehole, drive the sampler to desired depth in borehole.

B. To maximize sample integrity, collect the sample from the deepest tube, provided quality is good (i.e., no headspace) or as specified by the Drilling Work Plan and/or Sampling Plan.

C. Quickly observe lithology, seal the tube ends with Teflon tape, high-density polyethylene caps, and secure with duct tape.

D. Use an indelible marker to label the sample with identification (borehole/well number followed by top of sample depth), sampling date, sample time, analysis type(s), and sample collector's initials per SOP 4.2.

E. Immediately place the sample tube in a plastic bag and seal by tying a knot in the opening or place the sample in a Ziplock® bag. Double bag samples to keep them dry and/or prevent cross contamination when there is a concern.

F. To facilitate rapid cooling, all samples should be placed in an insulated cooler containing ice. Ice melt water is to be drained from the cooler throughout the day, and all loose ice must be double bagged at the end of the day for courier delivery to the analytical laboratory. Blue Ice coolant packs should be used when shipping samples through the LLNL Shipping Department.

G. Document sample identification, time and date of sample, location, turnaround time, and analysis type(s) on the Analytical Sample Summary Sheet (Attachment A) and the Borehole/Well Construction Log (Attachment C, SOP 1.1).

6.3.4 Sample collection for metal, high explosives (HE), and radiological analysis:

A. Load tubes into split-barrel sampler and drive sampler to desired depth in borehole. Stainless steel sample tubes should be used during metals sampling to prevent metal cross contamination.

B. Record lithology, seal the tube ends with Teflon tape, and secure with duct tape. Alternatively, sample can be transferred to a wide-mouth glass jar and sealed with duct tape.

C. Use an indelible marker to label the sample tube or jar with the identification (borehole/well number followed by top of sample depth), sampling date/time, sample analysis type(s), sample collector's initials per SOP 4.2.

D. Place the sample tube or glass jar in a plastic bag and refrigerate as described in 6.3.3 E.

E. If tritium analysis is to be performed, immediately refrigerate the sample tube or jar in plastic bags in an insulated cooler. If a jar is used, ensure that the jar is packed tightly to reduce air space, and that the lid is closed tightly and taped to help seal. If the samples are not immediately shipped to the analytical laboratory, they should be stored in a refrigerator. Samples held overnight will be transferred to a freezer.

F. Document sample identification, time and date of sample, location, turnaround time, and analysis type(s) on the Analytical Sample Summary Sheet (Attachment A) and the Borehole/Well Construction Log (Attachment C, SOP 1.1).

6.4 Coring

6.4.1 Wash core barrel with detergent and water and rinse with clean water, or steam clean as per SOP 4.5. Collect a rinesate/equipment blank from the core barrel and submit for analysis as per SOP 4.9, "Collection of Field QA/QC Samples," when necessary.

6.4.2 Insert core barrel and core 5 ft or less.

6.4.3 Retrieve the core barrel with a wireline overshot device immediately. Place the core in a clean polyvinyl chloride (PVC) core tray, ensuring that the core remains in stratigraphic sequence.

6.4.4 Collection of samples for VOC analysis.

A. Quickly observe lithology. Place a core segment of lithified sediment or rock approximately 3 to 6 in. long in stainless steel or brass cylinder tubes. Seal the ends with Teflon tape, cover with high-density polyethylene caps, and secure with duct tape. Wide-mouth glass jars sealed with duct tape may be used if specified in the Sampling Plan.

B. Use an indelible marker to label the sample with identification (borehole/well number followed by top of sample depth), sampling date/time, analysis type(s), and sample collector's initials per SOP 4.2.

C. Immediately place the sample in a bag, and refrigerate in an insulated cooler (Section 6.3.3 E).

D. Document sample identification, time and date of sample, location, turnaround time, and analysis type(s) on the Analytical Sample Summary Sheet (Attachment A) and the Borehole/Well Construction Log (Attachment C, SOP 1.1).

6.4.5 Collection of samples for metal, HE, and radiological analysis.

A. Record lithology, wrap a core segment of approximately 3 in. with inert plastic tubing in an air-tight plastic bag or in a wide-mouth glass jar, and seal with duct tape. Note: the sample must be packed tightly to reduce air space. Other acceptable sample containers are stainless steel or brass cylinder tubes. If these are used, seal the ends with Teflon tape, cover with high-density polyethylene caps, and secure with duct tape.

B. Use an indelible marker to label the sample with the identification (borehole/well number followed by top of sample depth), sampling date/time, sample analysis type(s), sample collector's initials, and LLNL/project name (optional).

C. Place the wrapped core segment, glass jar, or soil sample tubes in sealed bags and refrigerate as previously described in Section 6.3.3 E.

D. If tritium analysis is to be performed and samples are not shipped out immediately, samples should be transferred to a refrigerator at the end of the day, or a freezer if held overnight.

E. Document sample identification, time and date of sample, location, turnaround time, and analysis type(s) on the Analytical Sample Summary Sheet (Attachment A) and the Borehole/Well Construction Log (Attachment C, SOP 1.1).

6.4.6 Store remainder of core in boxes per SOP 1.15, "Well Site Core Handling."

6.5 Depth Sampling—Livermore Site

"Depth Sampling" uses the mud-rotary drilling technique and a 94-mm wireline punch-coring system. This technique enables the collection of samples from several water-bearing zones in each borehole while preventing or minimizing cross contamination. The technique is utilized effectively when VOC concentrations are moderate to low (i.e., generally less than about 10 parts per million [ppm]). Attachment B is a schematic diagram of punch-coring and depth sampling that shows a water-bearing zone encountered after sampling and drilling through two "shallower" water-bearing zones containing VOCs. During the drilling a mud cake forms along the borehole sidewall, which restricts the water flow from the upper water-bearing zones into the hole. In addition, the relatively dense drilling mud penetrates the formation and further restricts water flow into the borehole from the formation. These effects tend to isolate and therefore "protect" deeper water-bearing zones from the VOCs. The following procedures are used:

6.5.1 Use pure bentonite containing no polymers or chemical additives of any kind and potable water from a pre-approved source(s).

6.5.2 Upon encountering a new water-bearing zone, the sampler is removed with a wireline while the drill rod remains in the borehole, and new mud is mixed in a dedicated tub. The new mud, pumped into the drill rod, displaces the old drilling mud, which may contain VOCs, into the annular space outside of the drill rod (Attachment B). The mud tub at the surface collects the spent mud and, subsequently, the cleaned core barrel, per SOP 4.5, is deployed through the new drilling mud to prevent contamination of the sampling equipment with VOCs that may have been in the previous drilling mud.

6.5.3 Core drill 1 to 2 ft to collect a sample of the sediment for chemical analysis (Attachment B).

6.5.4 Retrieve the core barrel with a wireline overshot device.

6.5.5 To minimize potential displacement of pore water in the sample, retain the bottom-most tube for chemical analysis. If significant void space or drilling mud penetration is evident, discard the sample and collect and retain the next suitable sample.

6.5.6 Permeable lenses (<3 ft thick) may be sampled by quickly "stuffing" sediment core into a brass sample tube and noting the location on the borehole log.

6.6 Post Operation

6.6.1 Perform post-work activities described in SOP 4.1, Section 6.4.

6.6.2 Collect, inventory, and prepare all samples for shipment, per SOP 4.4, "Guide to the Handling, Packaging, and Shipping of Samples."

6.6.3 Fill out CoC forms and shipping forms per SOP 4.2.

6.6.4 Record a daily summary of drilling and sampling in the Field Sampling Logbook per SOP 4.2, and on the Daily Field Report (Attachment C).

6.6.5 Deliver all original forms and logbooks (when complete) to the DMT for storage. Provide the DC copies for review and distribution.

7.0 QUALITY ASSURANCE RECORDS

7.1 Borehole/Well Construction Log

7.2 Chain-of-Custody Form

7.3 Document Control Logbook

7.4 Daily Field Report

7.5 Soil Analyses Form

7.6 Drilling Work Plan

8.0 ATTACHMENTS

Attachment A—Analytical Sample Summary Sheet

Attachment B—Schematic Diagram of Depth Sampling and Punch Coring

Attachment C—Daily Field Report

Attachment A

Analytical Sample Summary Sheet

Analytical Sample Summary Sheet

Location ID_____

Sampling Date	Sample ID	Water Bearing Zone	Soil Type (USCS)	Laboratory	Analytic Method	Turn-around-time	CoC#

Attachment B

Schematic Diagram of Depth Sampling and Punch Coring

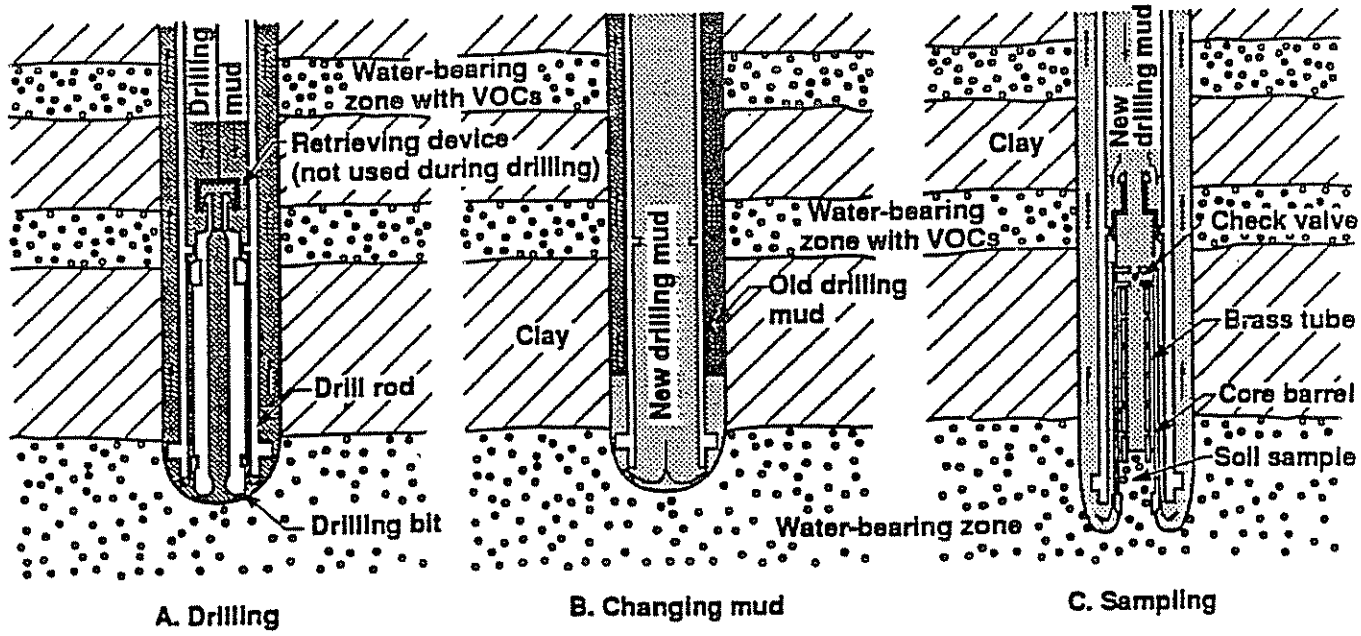

Attachment B. Schematic diagram of depth sampling and punch coring (Dresen and Hoffman, 1986). Arrows indicate direction of mud circulation.

Attachment C

Daily Field Report

DAILY FIELD REPORT

Date	Project(s):
Name:	Project Manager:
Vehicle:	Job Number:

PID/OVA Calibration: Yes _____ No _____	Daily Site Safety Meeting Time _____
Time: _____	

Time	Activity

LLNL Environmental Restoration Division (ERD)
Standard Operating Procedure (SOP)

ERD SOP 1.3: Drilling—Revision: 5

AUTHOR(S):
R. Davis

ENVIRONMENTAL RESTORATION DIVISION
CONTROLLED COPY
_____
THIS IS A RED STAMP
ERD

APPROVALS:

Jesse Lyon — 6/30/06
Division Leader

Fred Huff — 4/14/06
Hydrogeology & Decision Support Group Leader

CONCURRENCE: Date

Rebecca Gadrich — 6/21/06
QA Implementation Coordinator

1.0 PURPOSE

The purpose of this SOP is to ensure acceptable, consistent drilling procedures for ground water investigations that include borehole logging and sampling and monitor well, extraction well, or piezometer installation.

2.0 APPLICABILITY

This procedure is applicable for all personnel performing drilling operations and shall be fully reviewed prior to conducting these activities. ERD work activities are conducted within the framework of the institutional Integrated Safety Management System (ISMS). The Environmental Management System (EMS) is a component of the ISMS, which is also supported during the planning, performing, and evaluation of the work processes.

3.0 REFERENCES

3.1 Barcelona, M. J., J. P. Gibb, J. A. Helfrich, and E. E. Garske (1985), *Practical Guide to Ground Water Sampling*, U.S. Government Printing Office, EPA/600 2-85/104.

3.0 REFERENCES

3.1 Barcelona, M. J., Gibb, J. P., Helfrich, J. A., and Garske, E. E., *Practical Guide for Ground Water Sampling*, Washington, D.C., U.S. Government Printing Office, EPA 600/2-85-104, 1985.

3.2 Department of Water Resources (1981), *Water Well Standards: State of California*, California Resources Agency, Bulletin 74-81.

3.3 Occupational Safety and Health Administration Hazardous Waste Operations and Emergency Response (29 CFR 1910.120).

4.0 DEFINITIONS

See SOP Glossary.

5.0 RESPONSIBILITIES

5.1 Division Leader (DL)

The DL's responsibility is to ensure that all activities performed by ERD at the Livermore Site and Site 300 are performed safely and comply with all pertinent regulations and procedures, and provide the necessary equipment and resources to accomplish the tasks described in this procedure.

5.2 Project Leader (PL)

The PL's responsibility is to ensure that all activities are performed safely and comply with all pertinent regulations and procedures, work is authorized through an IWS, institution requirements of the Findings and Determination are followed, and there is sufficient funding to initiate the work.

5.3 Hydrogeology & Decision Support Group Leader (HDSGL)

The HDSGL's responsibility is to ensure that proper procedures are followed for activities (e.g., drilling, borehole logging and sampling, well installation and development).

5.4 Hydrogeologist (HG)

The HG is responsible for the overall investigation, planning (includes generating a Drilling Work Plan and/or Sampling Plan), assessment, and remediation within a study area, geologic and hydrogeologic information, and decisions regarding sample depths and analyses required.

5.5 Quality Assurance Implementation Coordinator (QAIC)

The QAIC's responsibility in respect to this SOP is to review the Drilling Work and/or Sampling Plan distributed by the Hydrogeologist or the Drilling Geologist Supervisor.

5.6 Site Safety Officer (SSO)

The SSO's responsibility is to ensure that fieldwork is conducted safely and in compliance with applicable IWSs, Site Safety Plans, SOPs, and any other applicable safety related documentation.

5.7 Drilling Coordinator (DC)

The DC is responsible for reviewing the Drilling Work Plan and/or Sampling Plan and provides the interface between the DG, Hydrogeologist (HG), and the field personnel; notifying Building Coordinators, Site Planning, and LLNL Gardeners; coordinating any necessary surveys (utilities, biological, archaeological) prior to drilling; and monitoring the progress of drilling activities daily.

5.8 Drilling Geologist Supervisor (DGS)

The DGS is responsible for assisting in the preparation of the Drilling Work Plan and/or Sampling Plan prior to commencing related work activities; coordinating geologist schedules and related activities, equipment needs, and monitoring the progress of daily activities.

5.9 Drilling Geologist (DG)

The DG is responsible for reviewing the Drilling Work Plan and/or Sampling Plan and conducting and documenting drilling, operational and safety procedures per the work plan, and to inform the DC and HG of any nonconformances.

5.10 Data Management Team (DMT)

The DMT is responsible for reviewing the Drilling Work and/or Sampling Plan and the disposition of original documents received as a result of performing work activities described by this SOP.

6.0 PROCEDURES

The drilling process should minimally alter the medium that is being investigated. It is essential that the drilling process does not introduce hazardous or foreign substances into the borehole or create conduits that facilitate the spread of existing contaminants. Various methods are used for drilling including hollow-stem augers, mud rotary, air or air-mist rotary. In areas of multiple water-bearing zones at Site 300, conductor casings or intermediate casings may be used to isolate each encountered water-bearing zone.

6.1 Preparation

The DC or his designee will obtain an approved release order from an ERD Technical Release Representative (TRR) for the borehole/well and track the drilling progress against the release order. Drilling work shall be performed only when a current, valid Subcontract Release is in place. In the event that the borehole drilling will likely exceed the approved release order amount for the borehole/well, the DC must contact the TRR to revise the release order before drilling continues. Work performed in the absence or in exceedence of a release order will be considered an unauthorized procurement.

6.1.1 Prepare the Drilling Work Plan and/or Sampling Plan. The plan is prepared by the HG or DGS who should review existing geologic and hydrogeologic information to determine drilling locations and estimate key parameters (e.g., sample target zones, depth and thickness, types and concentrations of contaminants, etc.). The Drilling Work Plan and/or Sampling Plan should include scope of work, drilling and sampling strategy, and purposes of borings/wells.

6.1.2 Review the Drilling Work Plan and/or Sampling Plan. The plans are distributed to the DG, HG, DGS, DC, DMT, and the QAIC to review. The HG or DGS should e-mail the plan to these personnel at least one week before drilling is scheduled to begin. Inform the appropriate Environmental Analyst of pending drilling activities when appropriate.

6.1.3 Prior to drilling, perform the applicable preparation activities described in SOP 4.1, "General Instructions for Field Personnel". Personnel who are new to the LLNL project will receive direct field supervision and on-the-job training (OJT) from a Subject Matter Expert (SME) for at least the first 24 hours of field activity using the ERD Field Investigation Orientation Lesson Plan (course number EP7033-05).

6.1.4 The DG should obtain materials listed in the Drilling Geologist Equipment Checklist (Attachment A, SOP 1.1) and obtain the appropriate PPE (SOP 4.1).

6.1.5 The DC should verify that underground utilities have been surveyed and that drilling activities will not interfere. Livermore Site drilling locations must be cleared to 5 ft below ground by Labor Shop personnel using "air knife" machinery to the maximum anticipated diameter of the borehole.

6.1.6 The DC should ensure the working areas are cleared of all brush and minor obstructions, as necessary.

6.1.7 Decontaminate all downhole drilling and sampling equipment, including the back of the drilling rig (SOP 4.5, "General Equipment Decontamination").

6.1.8 Ensure that no solvents, light hydrocarbon-based lubricants, or paints are present or applied to downhole drilling tools or samplers. The lubricants "King Stuff" and "Green Plus" are acceptable for drill rod threads. The Material Safety Data Sheets for the lubricants should be available. Use pure bentonite containing no polymers or chemical additives of any kind. Record the brand name and

manufacturer of the bentonite used on the Borehole Well Construction Log (SOP 1.1, "Field Borehole Logging," Attachment C).

6.1.9 Ensure that the back of the drilling rig is free of any mud, leaking hydraulic lines, and excess grease that could be dislodged during drilling. If a leak occurs during drilling, place a drip pan or absorbent pad under the leak to contain it. Terminate drilling activities until leak is repaired if it cannot be sufficiently contained. If air-rotary drilling is to be used, ensure that air systems include an in-line filter to remove all oil from the compressed air.

6.1.10 Prepare Controlled Area (approximately 50 ft radius exclusion zone around drill rig delineated by barricades, caution tape, and appropriate signage) and conduct daily safety meeting. The DG should regulate access to the Controlled Area, obtain appropriate signs, and enforce PPE requirements. Document daily safety meetings including topic, attendees, and time on Attachment C, Daily Field Report, SOP 1.2, "Borehole Sampling of Unconsolidated Sediments and Rock."

6.2 Safety Considerations

6.2.1 To ensure safety to the workers and the environment, the procedures described in the following sections will be conducted in accordance with LLNL Integration Work Sheet (IWS) 12654 "Drilling in VOC and Mixed Waste-Contaminated Soils at the Livermore Site" and IWS 11578 "Drilling in VOC-Contaminated Soils at the Livermore Site". Drilling activities at Site 300 will be conducted in accordance with IWS 12684 "Site 300 Drilling Activity."

6.3 Operation

6.3.1 Use the Borehole/Well Construction Log (SOP 1.1, Attachment C) to document field information and comments. Complete all lines on the forms. Use the letter designation "NA" (not applicable) or "NK" (not known) in all blank spaces. If some steps or procedures are not performed as described, state the reason on the Borehole/Well Construction Log. The instructions for this form are included in SOP 1.1, "Field Borehole Logging." Also complete a chronology of daily events on the Daily Field Report (Attachment C, SOP 1.2).

6.3.2 Borehole logging must conform to SOP 1.1 procedures. Borehole sampling for subsequent chemical/radiological analysis must conform to SOP 1.2.

6.3.3 Screen samples of the drilling mud using the PID or FID prior to entering lower hydrogeologic units to prevent possible cross-contamination between shallow and deeper zones. Prevent possible cross-contamination between shallow and deeper permeable water bearing zones by having the driller change-out the drilling mud before drilling through any aquitard.

6.3.4 Monitor the work environment per SOP 4.1 during all phases of the work.

6.3.5 Collect all soil/rock samples as specified in the Sampling Plan per SOP 1.2. Collect and store all cored sediments or rock according to SOP 1.15, "Well Site Core Handling."

6.3.6 If water is encountered in the borehole in which mud was not used, a bailed sample may be requested to gain information about potential contaminants. Samples should be named according to SOP 4.2, "Sample Control and Documentation." Record sampling information including the sample depth on the Borehole/Well Construction Log (SOP 1.1, Attachment C). Follow other appropriate SOPs such as SOP 2.4, "Sampling Monitor Wells with a Bailer" and SOP 4.3, "Sample Containers and Preservation."

6.3.7 In the event that an uncased borehole is left open more than 24 hours, the DG should consult with the HG to evaluate the need to take measures to prevent cross-contamination of water-bearing zones within the borehole, such as the installation of conductor casing.

Note: If the borehole is left unattended at any time, the DG should ensure that the borehole is covered and protected.

6.4 Post Operation

6.4.1 Perform post-work activities described in SOP 4.1, Section 6.4.

6.4.2 The DC should ensure that a daily driller's report is maintained and submitted by the drilling contractor. The report should give a complete description of the number of feet drilled, number of hours on the job, shutdown due to breakdown, length of casing set, materials used, and other pertinent data.

6.4.3 Handle all soil cuttings and waste materials per SOP 1.8, "Disposal of Investigation-Derived Wastes (Drill Cuttings, Core Samples, and Drilling Mud)."

6.4.4 If temporary casing is needed (for reasons such as lost circulation or excessive caving), decontaminate the casing as outlined in SOP 4.5. The use of temporary casing is well-specific, and its use should be decided upon by the DG and HG.

6.4.5 The abandonment of any boring or well should be in accordance with appropriate state regulations and follow the procedures in SOP 1.7, "Well Closure."

6.4.6 The DG should deliver original copies of the Borehole/Well Construction Log, Well Development Form, and other relevant forms and information to the quality control reviewer for review. After review, edit documents and copy and distribute files. Deliver final versions of original documents to DMT.

7.0 QUALITY ASSURANCE RECORDS

7.1 Borehole/Well Construction Log

7.2 Chain-of-Custody Form

7.3 Field Logbook

7.4 Daily Field Report

8.0 ATTACHMENTS

Not applicable.

LLNL Environmental Restoration Division (ERD)
Standard Operating Procedure (SOP)

ERD SOP 1.4: Well Installation—Revision: 5

AUTHOR(S):
R. Davis

ENVIRONMENTAL RESTORATION DIVISION
CONTROLLED COPY
_____
THIS IS A RED STAMP
ERD

APPROVALS:	Date
Jesse Glow **Division Leader**	8/30/06
Rd Wolf **Hydrogeology & Decision Support Group Leader**	8/10/06
CONCURRENCE:	**Date**
Rebecca Goodrich **QA Implementation Coordinator**	8/10/06

1.0 PURPOSE

The purpose of this SOP is to ensure proper well design and installation. Wells provide a means of collecting representative ground water samples and water-level data from a distinct water-bearing zone. Wells can also be used to extract contaminated ground water, or reinject treated ground water.

2.0 APPLICABILITY

This procedure is applicable for all personnel performing well installation operations, and shall be fully reviewed prior to conducting these activities. ERD work activities are conducted within the framework of the institutional Integrated Safety Management System (ISMS). The Environmental Management System (EMS) is a component of the ISMS, which is also supported during the planning, performing, and evaluation of the work processes.

3.0 REFERENCES

3.1 Department of Water Resources (1991), *California Well Standards*: *State of California*, Resources Agency, Bulletin 74-90 (Supplement to Bulletin 74-81).

3.2 Driscoll, F. G. (1986), *Ground Water and Wells*, Johnson Division, St. Paul, Minnesota.

3.3 U.S. Environmental Protection Agency (1987), *A Compendium of Superfund Field Operations Methods*, EPA/540/p-87/001.

3.4 California Environmental Protection Agency, Department of Toxic Substances Control (1994), *Monitoring Well Design and Construction for Hydrogeologic Characterization*.

3.5 American Society of Testing and Materials (2004), *Standard Practice for Design and Installation of Ground Water Monitoring Wells in Aquifers*, ASTM D5092-04.

4.0 DEFINITIONS

See SOP Glossary.

5.0 RESPONSIBILITIES

5.1 Division Leader (DL)

The DL's responsibility is to ensure that all activities performed by ERD at the Livermore Site and Site 300 are performed safely and comply with all pertinent regulations and procedures, and provide the necessary equipment and resources to accomplish the tasks described in this procedure.

5.2 Project Leader (PL)

The PL's responsibility is to ensure that all activities are performed safely and comply with all pertinent regulations and procedures, the work is authorized through an IWS, institution requirements of the Findings and Determination are followed, and there is sufficient funding to initiate the work.

5.3 Hydrogeology & Decision Support Group Leader (HDSGL)

The HDSGL's responsibility is to ensure that proper procedures are followed for activities (e.g., drilling, borehole logging and sampling, monitor well installation and development).

5.4 Hydrogeologist (HG)

The HG is responsible for the overall investigation, planning, assessment, and remediation within a study area, decisions regarding borehole depths and well specifications, arranging the review of borehole and geophysical logs, and determining target zone for completion. The HG is also responsible for providing necessary information to Site Planning for the Findings and Determination, if applicable.

5.5 Site Safety Officer (SSO)

The SSO is responsible for ensuring the safety of ERD's ongoing operations, fieldwork, and facilities and that the work being performed is covered by an authorized IWS.

5.6 Drilling Coordinator (DC)

The DC schedules all drilling related activities and coordinates the drilling contractor schedules and equipment needs and the progress of drilling activities daily. The DC provides the interface between the Project Leader, Hydrogeologist (HG), and the field activities and is responsible for coordinating the well completion activities with the Drilling Geologist. The DC ensures line location, Findings and Determination, and potholing are completed prior to drilling, if applicable.

5.7 Drilling Geologist Supervisor (DGS)

The DGS is responsible for assisting in the preparation of the Drilling Work Plan and/or Sampling Plan prior to commencing related work activities; coordinating geologist schedules and related activities, equipment needs, and monitoring the progress of daily activities.

5.8 Drilling Geologist (DG)

The DG is responsible for overseeing and documenting well completion activities safely and correctly per the Drilling Work Plan, and applicable operational and safety procedures, and to inform the DC of any nonconformances.

5.9 Data Management Team (DMT)

The DMT is responsible for the disposition of the original documents received as a result of performing work activities described by this SOP.

6.0 PROCEDURES

Well installations create permanent access for collecting ground water samples, measuring aquifer characteristics, and extracting ground water or reinjecting treated water. Wells should only minimally alter the medium being sampled.

6.1 Preparation

6.1.1 Prior to conducting work, perform the applicable preparation activities described in SOP 4.1, "General Instructions for Field Personnel". Personnel who are new to the LLNL project will receive direct field supervision and on-the-job training (OJT) from a Subject Matter Expert (SME) for at least the first 24 hours using the ERD Field Investigation Orientation Lesson Plan (course number EP7033-05).

6.1.2 Review Drilling Workplan for preliminary well completion information. After drilling, analysis, and logging, the original objectives may change. The HG may change how the well is to be completed. This change will be communicated to the DG by the HG.

6.1.3 Obtain necessary items listed in the Drilling Geologist Equipment Checklist (SOP 1.1, "Field Borehole Logging," Attachment A) and obtain appropriate personal protective equipment (PPE) for site activities per SOP 4.1, "General Instructions for Field Personnel."

6.1.4 Ensure that no foreign materials are introduced into the borehole without the DC's approval. Use of solvents, glues, oil, or cleaners in the borehole is prohibited. Mud stabilization additives may be allowed in certain situations. The HG may grant such approval after communication with the appropriate regulatory agencies.

6.1.5 Decontaminate all equipment and well casing, screen, centralizers, etc. prior to monitor well installation per SOP 4.5, "General Equipment Decontamination." It is not necessary to decontaminate pre-cleaned well casing, screen, and centralizers supplied in factory-sealed containers, unless exposed to possible contamination.

6.1.6 Ensure that the proper institutional permits are in place (e.g., line location, excavation permit).

6.2 Safety Considerations

6.2.1 To ensure safety to the workers and the environment, the procedures described in the following sections will be conducted in accordance with LLNL IWS 11578 "Drilling in VOC-Contaminated Soils at Livermore Site," LLNL IWS 12654 "Drilling in VOC and Mixed Waste-Contaminated Soils at the Livermore Site," and LLNL IWS 12684 "Site 300 Drilling Activity."

6.3 Operation

6.3.1 Drill all boreholes at least 4 in. greater in diameter than the outer diameter of the casing to be installed (minimum required work space in annulus is 2 in.). When setting a conductor casing, it is preferable to complete the casing a foot or more into the underlying clay or other fine-grained unit, if present. Bottom seals and the conductor casing annulus seal should be placed using Type I/II cement/2% bentonite grout or bentonite chips as directed by the HG or DGS. Approved grout accelerators, such as Cal Seal, are permitted for bottom and conductor casing annulus seals to decrease setting times.

Record the following on the Borehole/Well Construction Log (SOP 1.1, Attachment C) and/or the Monitoring Well As-Built Report (Attachment A):

A. Depth from surface grade of the following:

1. Bottom of the boring,
2. Overdrill (bottom) seal,
3. Well casing and screen,
4. Filter pack,
5. Fine filter pack,
6. Bentonite seal,
7. Grout,
8. Cave-in (slough),

9. Centralizers, and
10. Conductor casing, if permanent.

Note: Does not include wellhead completion specifications.

B. Composition of the grout, seals, and filter pack.

C. Casing/screen material and casing/screen inside diameter.

D. Screen slot size and the anticipated wellhead completion.

E. Type and amount of supplies used for well construction.

Note: Due to failure to reach specified depths, loss of tools, inadvertent contamination, or any other cause approved by the DC or HG, the well or borehole should be abandoned as discussed in SOP 1.7, "Well Closure."

6.3.2 Use Schedule 40 (or Schedule 80 at Site 300) PVC casing with 0.020-in. screen slot size for wells installed exclusively as monitor wells unless instructed otherwise by the DC or HG. If the well is installed to perform as an injection, extraction, or production well, the DC, HG, and DG, will determine the filter pack and screen slot size based on lithologic descriptions on the Borehole/Well Construction Log as per SOP 1.1, "Field Borehole Logging," interpretation of geophysical logs as performed per SOP 1.6, "Borehole Geophysical Logging," and if available, sieve analyses of the lithology in the screened interval. In addition, these personnel will determine the casing material (generally Schedule 40 or Schedule 80 PVC, stainless steel, or low carbon steel) based on site-specific conditions such as water quality, installation objectives, required tensile and compressive strengths.

6.3.3 Use stainless steel centralizers on all well installations unless the casing is being installed through hollow-stem augers. Fasten centralizers to the well casing by mechanical fasteners radially spaced about the casing at 120 or 90° degrees. Install centralizers at the top and bottom of the screened casing and on the blank casing at 5 to 10 ft below ground surface. Provide a description of the centralizer fastening device and the locations on the Borehole/Well Construction Log and Monitoring Well As-Built Report (Attachment A).

6.3.4 Place a filter pack in the annulus adjacent to the well screen in all monitor wells. The filter pack limits the transmission of sand and fines from the formation to the well, and stabilizes the formation. The filter pack should not extend within 5 ft of any water-bearing zone other than the one to be monitored. Well design should be modified to allow for a sufficient filter pack without threat of interconnecting water-bearing zones.

A. Fill the annulus between the well screen and borehole wall with washed Lonestar Lapis Luster #3 Monterey-type sand (or an equivalent 8 × 20 U.S. standard sieve size or filter pack approved by the HG) extending a minimum of 1 ft above the screen before swabbing. A cap should be placed over the top of the well casing before pouring the sand down the annulus to prevent sand from entering the casing.

B. When determined by the DC or HG, the filter pack is emplaced using a tremie pipe. For this, install a sand slurry composed of sand and potable water through the tremie pipe into the annulus throughout the entire screened interval and over the top of the screen. Continuously tag the depth of the filter pack to ensure that bridging does not occur.

C. Compact the filter pack by making a few passes with a bailer (swabbing) prior to the installation of the bentonite seal. Fully cover the screen after the sand has settled with sufficient filter material. Install at least 2 ft of sand above the top of a 5- to 10-ft-long screen. Increase the minimum filter pack thickness by approximately 1 ft for each additional 10 ft of screen. Cover the #3 sand with a minimum 1-ft layer of finer-grained Lonestar Lapis Luster Monterey-type sand #0/30 (or equivalent). The #0/30 sand is not added until it is verified that the #3 sand extends above the screen as discussed above. Attachment B displays a typical installation using the #0/30 sand.

D. Ascertain the depth of the top of the sand after compaction using a weighted tape or tremie pipe recorded by the DG.

6.3.5 Place a bentonite seal between the filter pack and grout to prevent infiltration of cement into the filter pack and the well. The bentonite should not be added until it is determined that there has been no settling of the filter pack. The steps below discuss the use of bentonite. Attachment B displays a typical installation using bentonite. A fine sand (#0/30) may be used on top of the bentonite seal if conditions warrant as determined by the driller and DG and approved by the DC.

A. Fill the annulus between well casing and borehole with a bentonite seal at least 3 ft thick (vertically) in the interval between the fine sand above the filter pack and the grout seal. Bentonite seal thickness may be increased by an extra foot for each additional 50 ft of depth for deep wells (200 ft or more).

B. Use uncoated bentonite pellets with a minimum purity of 90% sodium montmorillonite (with no additives and certified by the National Sanitation Foundations (NSF) to ANSI/NSF Standard 60, Drinking Water Treatment Chemicals - Health Effects) and a minimum dry bulk density of 75 lb/cu ft for 1/2-in. pellets. Place a cap over the top of the well casing and slowly pour the bentonite pellets directly down the annulus. Pour the pellets from different points around the casing to ensure even distribution in the annulus. Test the borehole for bridging of the bentonite during application. Bentonite chips, certified to ANSI/NSF Standard 60, may be used to reduce bridging problems and costs. Add enough approved clean water, usually 10 to 20 gal, to completely hydrate the bentonite.

C. Tag the top of the bentonite seal with a tremie pipe or a weighted tape to verify that the proper thickness of seal has been placed in the annulus.

D. Allow at least 1 h for the bentonite pellets to hydrate prior to placing grout.

6.3.6 Fill the well annulus with grout from the top of the bentonite seal to the surface. Only Type I/II [American Society for Testing and Materials (ASTM C-150)]

cement without accelerator additives may be used, unless otherwise specified by the DC. Place the grout in the well annulus as follows:

A. Completely fill the annulus between the well casing and borehole wall.

B. Place the grout with a tremie pipe unless the borehole is dry and does not exceed a depth of 30 ft. The tremie pipe typically used is 1.25-in. PVC.

C. Pump the grout through this pipe to the bottom of the open annulus until undiluted grout flows from the annulus at the ground surface. Deeper annular depths and larger diameter boreholes may require large amounts of grout. In these cases, set grout in 100 to 150-gal lifts, allowing sufficient time for the grout mix to set between lifts. Use approved accelerators such as Cal-Seal, to decrease setting times only with approval of the DC. Certain subsurface/borehole conditions may require an initial small lift of grout (<15 ft) to prevent rupturing the bentonite seal. The DG should check with the DC and HG on each completion.

D. The grout should consist of a neat cement mix composed of 2 lb of commercial bentonite powder, certified to ANSI/NSF Standard 60, and approximately 6.5 gal of water added per 94-lb bag of cement. Only grout mixed with approved water should be used.

E. After the grout has set (about 72 h), fill any depression in the grout due to settlement with a grout mix similar to that described above.

F. The DG shall write with an indelible marker, the well ID number, screened interval, and total depth on the well casing and cap.

6.3.7 Install a protective stove pipe or a below-grade vault around all monitor wells. This will normally be done at a later date by LLNL technicians. Prior to installation, the DG should ensure temporary wellhead protection by placing barriers around the well. The minimum elements in the protection design should include:

A. Protective stove pipe (above grade).

1. Install a minimum 2 ft × 2 ft, 3-in.-thick concrete pad, such that surface drainage is diverted away from the wellhead.

2. Secure a metal stovepipe to the concrete pad. The stovepipe must keep precipitation out of the well and is secured by a padlock. The exact height of the top of the well casing and stovepipe is recorded electronically or by using the Well Specifications Form, Attachment C, and made available to the DMT and Sampling Coordinator (SC), as appropriate.

3. Place the well identification label on the protective casing.

B. Vault (installed below grade when wells are located in streets, parking lots, or sidewalks).

1. Install the vault so that surface drainage is diverted away from the vault.

2. The lid of the vault must keep fluids out of the vault and have a key locking system.
3. Install a traffic-rated vault for installations in streets or parking lots.

6.4 Post Operation

6.4.1 Perform post-work activities described in SOP 4.1, Section 6.4.

6.4.2 Return the site to its original condition, using best reasonable efforts, and notify the DC that the well is completed and is ready for surveying and pump installation.

6.4.3 Arrangements will be made to have the LLNL Survey Team survey the cement pad or the edge of the vault to the nearest 0.01 ft. A shiny, metal well identification tag (shiner) is attached to the survey location (concrete pad or edge of vault) by the Survey Team with the well ID stamped on the tag. The survey data will be submitted to the DMT.

6.4.4 Deliver original copies of Borehole/Well Construction Log, Field Logbook, and all other relevant forms and information to the Quality Control Reviewer for review. After the review, edit documents and copy and distribute files. Deliver final versions of original documents to the DMT.

7.0 QUALITY ASSURANCE RECORDS

7.1 Borehole/Well Construction Log

7.2 Document Control Logbook

7.3 Monitoring Well As-Built Report

7.4 Well Specifications Form

8.0 ATTACHMENTS

Attachment A—Monitoring Well As-Built Report

Attachment B—Typical Monitor Well

Attachment C—Well Specifications Form

Attachment A

Monitoring Well As-Built Report

Location _____ Project _____

Observed By _____ Job No. _____

Driller/Installer _____ Boring/Well No. _____

Date _____

NOTE: final wellhead completion details not included

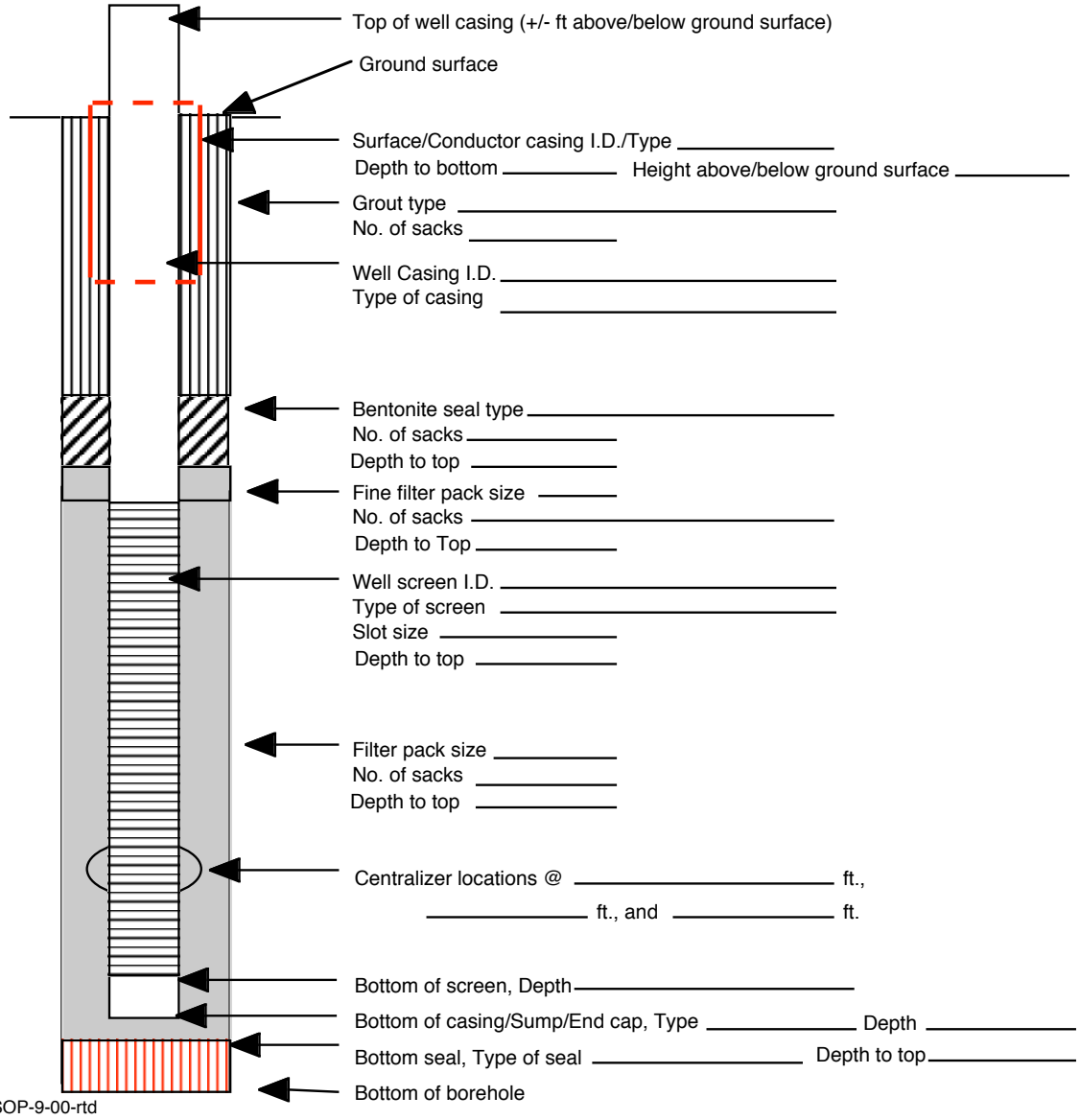

ERD-SOP-9-00-rtd

Remarks _____

_____

_____

ERD Approval By _____

Attachment A. Monitoring Well As-Built Report.

Attachment B

Typical Monitor Well

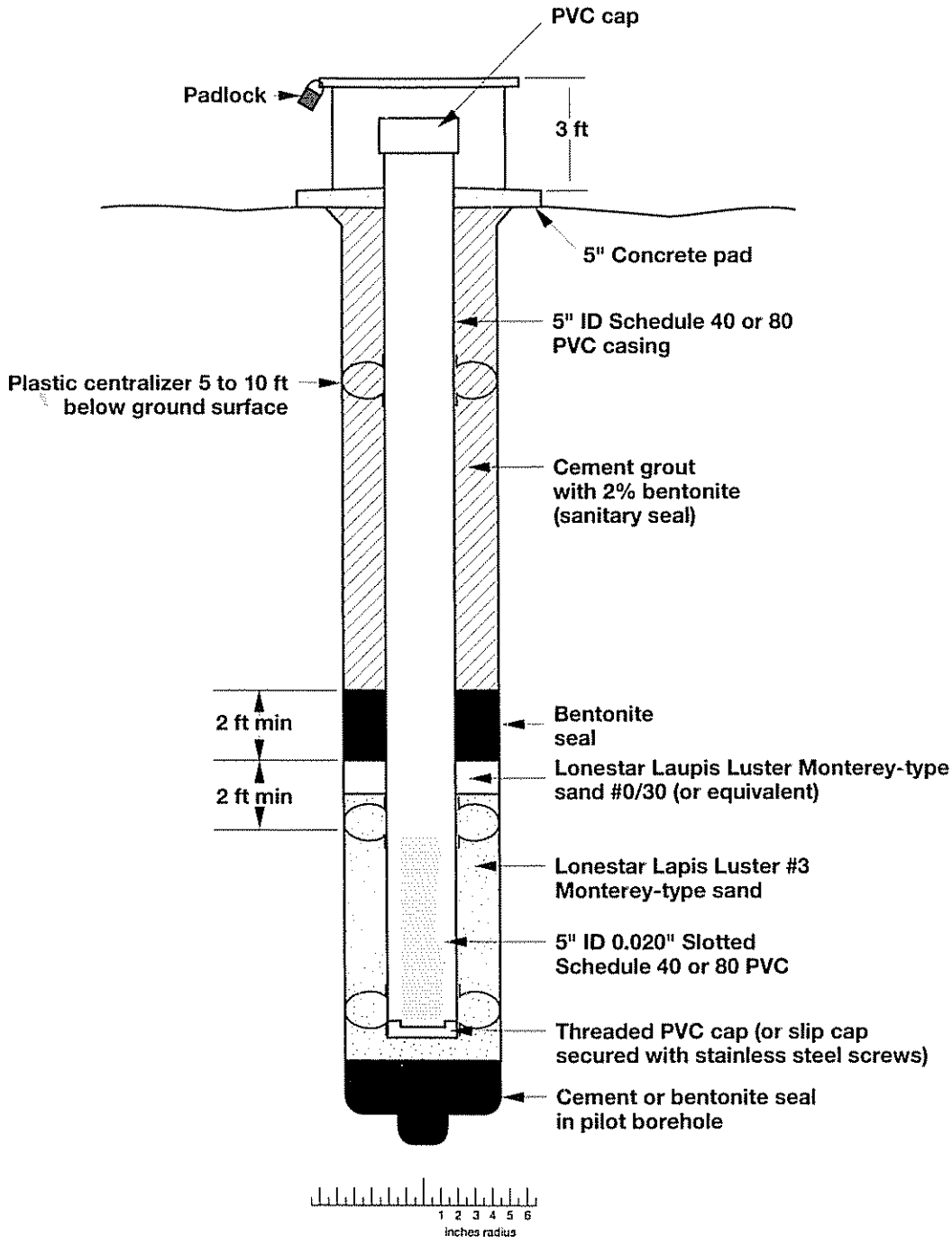

ERD-LSR-05-0028

Attachment B. Typical monitor well.

Attachment C

Well Specifications Form

WELL SPECIFICATIONS Form

FOR WELL INSTALLATION USE

Approximate Location of Well:

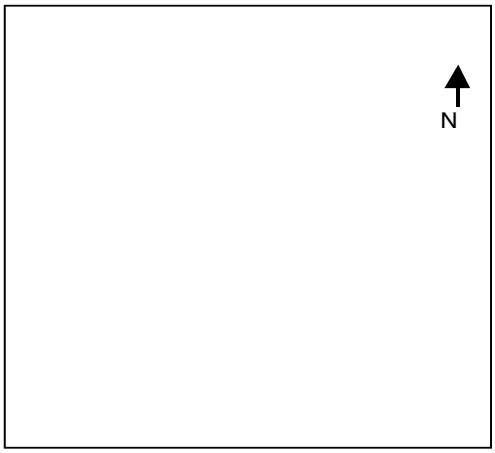

Location of well & surrounding area

_____
SAMPLE LOCATION IDENTIFICATION

_____ Total boring depth - ground

_____ Static depth

_____ Casing diameter

_____ Sustainable Q

_____ Casing depth - ground

_____ Hydro unit (Water bearing zone)

_____ Screened interval from ground

_____ Sand Pack Interval

_____ ***Date:*** _____ ***Signature:*** ***DRILLING GEOLOGIST*** _____ ***Print name Drilling Geologist***

FOR WELL DEVELOPMENT USE

DESCRIPTION OF INTENDED USE AND WELL LOCATION:

_____ Date: measured

_____ Flow rate (Q)

_____ Recommended Pump Type / H P

Estimated Contaminant Level (ppb)/other. (include all voc's, metals, rad., other)

_____

_____ ***Date:*** _____ ***Signature:*** ***HYDROGEOLOGIST*** _____ ***Print name Hydrogeologist***

Original Form to: EPD/ERD/DMT (Data Management Team) T4383 L-528

Copies to: Greg Howard Becky Goodrich _____

Circle one *Specify Name*

FOR WELL COMPLETION SPECS, PLEASE COMPLETE THE FOLLOWING INFORMATION:

Stove pipe or Christy box *Circle one*

_____ Stove pipe height

_____ Total depth *(Tagged from TOP of POM to bottom of casing)*

_____ P.O.M. *(Shiner elevation plus Stovepipe height = POM)*

_____ Date installed

_____ Pump type/Vol/HP

_____ Pump intake depth from P.O.M.

_____ Pump start date

_____ Date well completed and ready for sampling

Survey data:

_____ Northing

_____ Easting

_____ Shiner elevation

_____ ***Date:*** _____ ***Signature:*** ***TECHNOLOGIST*** _____ ***Print name Technologist***

Legend: Pump Types: GF = Grundfos Elect. Sub..; RF = RediFlo 115v/230v.; WW- Well Wizard, Bladder Pump; NP= No Pump; NA = Not Applicable; Well Types: BC= Barcad; LY = Lysimeter; MW = Monitor Well; NP = Newtron Probe; PR = Production Well/Water Supply Well

DMT/RTD/ERD 09-08-00

LLNL Environmental Restoration Division (ERD)
Standard Operating Procedure (SOP)

ERD SOP 1.5: Well Development—Revision: 5

AUTHOR(S):
R. Davis

ENVIRONMENTAL RESTORATION DIVISION
CONTROLLED COPY
_____
THIS IS A RED STAMP
ERD

APPROVALS: Date

Jesse Gow 8/30/06
Division Leader

[signature] 4/25/06
Hydrogeology & Decision Support Group Leader

CONCURRENCE: Date

Rebecca Goodrich 8/3/06
QA Implementation Coordinator

1.0 PURPOSE

The purpose of this SOP is to enhance well efficiency and subsequent water sample quality by removing materials introduced into the ground water, water-bearing formation, sand pack, and well screen during drilling and well installation.

2.0 APPLICABILITY

This procedure is applicable for all personnel performing well development operations, and should be fully reviewed prior to conducting these activities. ERD work activities are conducted within the framework of the institutional Integrated Safety Management System (ISMS). The Environmental Management System (EMS) is a component of the ISMS, which is also supported during the planning, performing, and evaluation of the work processes.

3.0 REFERENCES

3.1 Barcelona, M. J., J. P. Gibb, J. A. Helfrich, and E. E. Garske (1985), *Practical Guide to Ground Water Sampling*, U.S. Government Printing Office, EPA 600/2-85/104.

3.2 Driscoll, F. G. (1986), *Groundwater and Wells*, Johnson Division, St. Paul, Minnesota.

4.0 DEFINITIONS

See SOP Glossary.

5.0 RESPONSIBILITIES

5.1 Division Leader (DL)

The DL's responsibility is to ensure that all activities performed by ERD at the Livermore Site and Site 300 are performed safely and comply with all pertinent regulations and procedures, and provide the necessary equipment and resources to accomplish the tasks described in this procedure.

5.2 Project Leader (PL)

The PL's responsibility is to ensure that all activities are performed safely and comply with all pertinent regulations and procedures, work is authorized through an IWS, and there is sufficient funding to initiate the work.

5.3 Hydrogeology & Decision Support Group Leader (HDSGL)

The HDSGL's responsibility is to ensure that proper procedures are followed for activities (e.g., drilling, borehole logging and sampling, monitor well installation and development).

5.4 Hydrogeologist (HG)

The HG is responsible for the overall investigation, planning, assessment, and remediation within a study area, decisions regarding borehole depths and well specifications, and arranging the review of borehole, geophysical, and development logs.

5.5 Site Safety Officer (SSO)

The SSO is responsible for ensuring the safety of ERD's ongoing operations, fieldwork, and facilities and that the work being performed is covered by an authorized IWS.

5.6 Drilling Coordinator (DC)

The DC provides the interface between the DG, Hydrogeologist (HG), and the field activities and is responsible for coordinating drilling and well development and purge water disposal activities and the progress of drilling activities daily.

5.7 Drilling Geologist Supervisor (DGS)

The DGS coordinates the geologist schedules and related activities, equipment needs, and the progress of daily activities.

5.8 Drilling Geologist (DG)

The DG is responsible for conducting and documenting well development activities safely and correctly per the Drilling Work Plan, and applicable operational and safety procedures, and to inform the DC and DGS of any nonconformances.

5.9 Data Management Team (DMT)

The DMT is responsible for the disposition of the original documents received as a result of performing work activities described by this SOP.

6.0 PROCEDURE

The primary methods used to develop wells are surge-block/bail and air lift. These techniques are used to increase well production and reduce water turbidity by removing introduced sediments from the formation filter pack and well screen area.

6.1 Preparation

6.1.1 Prior to conducting well development activities, perform the applicable preparation activities described in SOP 4.1, "General Instructions for Field Personnel". Personnel who are new to the LLNL project will receive direct field supervision and on-the-job training (OJT) from a Subject Matter Expert (SME) for at least the first 24 hours of field activity using the ERD Field Investigation Orientation Lesson Plan (course number EP7033-05).

6.1.2 The DG should obtain relevant information on each well to be developed (e.g., drilling technique, drilling fluid losses, anticipated aquifer yield, screened interval, anticipated contaminants, etc.).

6.1.3 The DG should obtain materials listed in the Drilling Geologist Equipment Checklist (SOP 1.1, "Field Borehole Logging, Attachment A).

6.1.4 Decontaminate all equipment used in well development per SOP 4.5, "Equipment Decontamination."

6.1.5 Obtain sufficient collection containers such as 55-gal drums or portable tankers for temporary storage of well development water according to SOP 4.7A, "Livermore Site Treatment and Disposal of Well Development and Well Purge Fluids, or SOP 4.7B, "Site 300 Treatment and Disposal of Well Development and Well Purge Fluids." At Site 300, purged water is typically discharged directly to the cuttings pit, adjacent to the well. Ensure that:

A. Containers have no leaks.

B. Containers, such as 55-gal drums, are stabilized to prevent spillage.

C. Containers are field manageable. The use of truck- or trailer-mounted tanks may be necessary for particularly large volumes of water.

D. Containers are labeled as non-potable purge water.

6.1.6 Check the source(s) of water to be introduced into the borehole. Use analyte-free water. Request analysis if none exist prior to field operations.

6.2 Safety Considerations

6.2.1 To ensure safety to the workers and the environment, the procedures described in the following sections will be conducted in accordance with LLNL Integration Work Sheet (IWS) 12654 "Drilling in VOC and Mixed Waste-Contaminated Soils at the Livermore Site", IWS 11578 Drilling in VOC-contaminated Soils at the Livermore Site," and IWS 12545 "Operation of the AMS TR7000 Well Management System." Drilling activities at Site 300 will be conducted in accordance with IWS 12684 "Site 300 Drilling Activity."

6.3 Operation

Well development should be performed as soon as practical after well installation. Development may be performed prior to fully installing the sanitary seal, as determined by the HG or designee.

6.3.1 Measure depth to water according to SOP 3.1, "Water Level Measurements," and measure the total depth of the well.

6.3.2 Record all information on the Well Development Data form (Attachment A).

6.2.3 Remove any residual drilling mud from the casing by bailing or flushing with potable water through a tremie pipe. Introduce just enough water to remove the drilling mud.

6.3.4 Segregate removed drilling mud from the formation water, if possible. Use drilling contractor's mud tank to collect unthinned drilling mud and initial muddy formation water.

6.3.5 Begin well development using a surge block/bailer based on the number of well casing volumes. Depending on site specific conditions, follow with additional surge-block/bailing, airlift, or a combination of the two methods, as described below. Continue until the water is nearly sediment-free as described below:

A. Use a surge-block/bailer until the water is relatively sediment-free (less than 3 ml/L sediment measured within an Imhoff cone). If a well cannot produce enough formation water because the aquifer yields insufficient water, small amounts of potable water may be introduced only with the approval of the HG or DGS. When most of the sediment is removed, continue development with formation water only, if possible.

B. To prevent forcing a pocket of air into the sand pack and possibly reducing the yield of the well, it is important to use dual tube airlifting. This process involves diverting an air line into an eductor pipe in the well to create a vacuum that "lifts" the ground water to the surface. Two-inch PVC as the eductor pipe, and 1-in. tremie pipe with a "J" attachment as the air line may be used. In this arrangement, the "J" end extends several inches into the bottom opening of the 2-in. PVC. At the surface, compressed air is fed through the tremie pipe, travels down through the submerged "J" tube, and travels back to the surface through the 2-in. PVC. This process creates a vacuum in the PVC casing that "lifts" the ground water out of the well and allows for easy containment of the purged water. Air lifting should start at the top of the sand pack and move down until the entire sand pack interval is developed.

C. Start dual-tube air lifting about 10 ft above the top of the screen, and use just enough air pressure to develop a flow. Gradually increase air pressure to maximize flow. Make periodic water level measurements to ensure the water level in the well casing does not fall below the top of the screen. Surge air pressure periodically to make the water column rise and fall. Move the air line down into the screen as the water clears. Note the time it takes for the water to clear between successive rounds of surging. Effective surging is indicated by decreasing time for water to clear. Ensure that the compressed air is filtered before introduction into the well. All collected purge water should be treated or disposed in accordance with SOP 4.7A or SOP 4.7B.

6.3.6 Visually note the initial water color, clarity, odor and pH (using pH paper) of the purge water, and record on the Well Development Data form (Attachment A). The pH is checked primarily to ensure there is no grout or cement contamination. The majority of the ground water falls in a pH range of between 7 and 9. If the pH of the purged water at the end of development is above 9.5, the condition of the well should be evaluated for grout invasion. This is especially apparent if the pH is higher at the start of development and slowly declines as more water is removed from the well, but rises to higher levels upon ceasing the purging process. Further air development may need to be performed until a lower pH is obtained.

6.3.7 Periodically record descriptions of development method, flow rate, water clarity, odor, water levels, recovery rates, quantity of water evacuated, pH, and sediment content (using a 1-liter Imhoff cone).

6.3.8 Develop the well until it is sediment free. An Imhoff cone should be used to determine when there is no further improvement in well sediment levels. As a general rule of thumb, sediment should consist of 3 ml/L or less in the cone when initial development is complete. A final pH check using pH paper should be conducted to ensure there is no cement contamination. Water chemistry parameters, including pH, specific conductance, temperature, and when possible, dissolved oxygen, and redox potentials, will be carefully scrutinized at the first routine sampling event to ensure the well was properly developed.

6.3.9 Contain all water produced during development. Determination of the appropriate treatment prior to disposal will be based on a chemical analysis of the water or at Site 300, purge water is typically discharged directly to the cuttings pit adjacent to the well. Handle development effluent according to SOP 4.7A and SOP 4.7B.

6.3.10 Using flow rates and recovery rates, estimate the discharge rate at which the well can be pumped while not allowing (if possible) the water level to fall below the top of the screened section of the casing. This estimated sustainable yield of the well should be reported to the ground water monitoring Sampling Coordinator (SC). In some cases, the yield is too low for any purging device. These cases should be labeled as low yielding monitoring wells or dry-out wells (SOP 2.7, "Presample Purging and Sampling of Low-Yielding Monitor Wells").

6.3.11 Collect a bailed water post-development sample when requested by the HG. The HG will specify the required analyses. Post-development samples are identified differently than routine bailed water samples. For example, a post-development bailed water sample collected from well W-815-2110 at a depth of 35 ft from the top of the casing would be identified as well W-815-2110-MSC-35-F. Post-development samples should be collected after full recovery of the static water level, if practical. The static water level should be measured before sampling.

6.4 Post Operation

6.4.1 Perform post-work activities described in SOP 4.1, "General Instructions for Field Personnel," Section 6.4.

6.4.2 Deliver original data forms to the Quality Control Reviewer for review. After the review, edit documents, copy, and distribute files. Deliver final versions of original documents to DMT.

7.0 QUALITY ASSURANCE RECORDS

7.1 Borehole/Well Construction Log

7.2 Chain-of-Custody Form

7.3 Document Control Logbook

7.4 Well Development Data Form

8.0 ATTACHMENTS

Attachment A—Well Development Data Form

Attachment A

Well Development Data Form

WEISS ASSOCIATES

WELL DEVELOPMENT DATA

By: _____ Sheet _____ of _____

Well No. / Location: _____ Job Name: _____

Date: _____ Job No: _____

Development Method(s): _____

Depth to Water Before Development (ft): _____ Sounded Depth (ft): _____

Screened Interval (ft-ft): _____ Spec. Depth (ft): _____ Well Diameter (in): _____

Time	Depth to Water (ft)	Gallons Pumped	Flow Rate (gpm)	Comments (water clarity, odor, methods, sounded depth, etc.)

Well Development Summary

Depth to Water During Pumping (ft): _____ Approximate Yield: _____

Depth to Water After Development (ft): _____ Average Pumping Rate (gpm): _____

Sounded Depth After Development (ft): _____ Pumping Rate Range (gpm): _____

Total Pumping Time (min): _____ Total H_2O Injected (gals): _____

Total Amount Evacuated (gals): _____

Note: All depths measured in feet below ground water surface (bgs).

Attachment A. Well development data form.

LLNL Environmental Restoration Division (ERD)
Standard Operating Procedure

ERD SOP 1.6: Borehole Geophysical Logging—Revision 5

AUTHOR(S):
R. Davis

ENVIRONMENTAL RESTORATION DIVISION
CONTROLLED COPY
_____
THIS IS A RED STAMP
ERD

APPROVALS: **Date**

Jesse Yow — 8/30/06
Division Leader

[signature] — 8/21/06
Hydrogeology & Decision Support Group Leader

CONCURRENCE: **Date**

Rebecca Goldrich — 8/21/06
QA Implementation Coordinator

1.0 PURPOSE

1.1 Borehole geophysics is a subsurface characterization method that involves *in situ* measurement of the physical properties of geologic materials penetrated by boreholes. Properly calibrated borehole geophysical (wireline) measurements can be used to define lithologic units, make correlations between wells, and estimate detailed quantitative geohydrologic property profiles of the lithologic units.

1.2 This SOP specifies procedures for conducting standard borehole geophysical logging operations at the Livermore Site and Site 300. The standard suite of geophysical logs used (summarized in Attachment A) at the two sites may include:

A. Natural Gamma Radiation Log (NGL).

B. Electromagnetic Induction Log (IL).

C. Spontaneous Potential Log (SP).

D. Electrical Resistivity Log (E-Log).

E. Guarded Electrode Resistivity Log (GL).

F. Borehole Video Log (BVL).

G. Three-Arm Caliper Log (CL).

H. Acoustic Borehole Televiewer (BHTV).

I. Digital Optical Televiewer (OPTV)

J. Neutron Log (NL).

K. Full Waveform Sonic (FWS)

L. Deviation Survey (DS).

2.0 APPLICABILITY

2.1 ERD work activities are conducted within the framework of the institutional Integrated Safety Management System (ISMS). The Environmental Management System (EMS) is a component of the ISMS, which is also supported during the planning, performing, and evaluation of the work processes.

2.2 The main application of borehole geophysics at LLNL is subsurface characterization. Geophysical logs are semi-continuous calibrated physical property measurements of the materials penetrated by the borehole. Because of this, the logs are internally consistent, and can be used to correlate lithologic indicators between boreholes. A wide variety of borehole geophysical logging tools that measure several different physical properties are available. Not all available logging tools are needed for a given logging operation. In order to select an appropriate suite of geophysical tools for a given site, it is important to consider the conditions in the borehole which are influenced primarily by the hydrogeology encountered and the drilling method used.

2.3 Livermore Site boreholes are commonly fluid filled due to mud rotary drilling operations and because saturated formation conditions are encountered between 30 and 120 ft below ground surface (bgs). Given these borehole conditions, the recommended logging suite for the Livermore Site boreholes consists of the following logs: CL, NGL, SP, E-Log, Guard Log and IL. The order the logs are run is determined by borehole conditions.

2.4 Saturated formation conditions at Site 300 are encountered at a wide range of depths between 15 and 500+ ft bgs, depending mainly on surface elevation. Site 300 boreholes are commonly air filled above the water table because minimal quantities of fluid are introduced into the borehole during air-mist rotary drilling operations. Therefore, the recommended logging suite for Site 300 boreholes consists of the following logs: CL, NGL, and IL. The order the logs are run is determined by borehole conditions. If the Site 300 are mud-rotary driven or water-filled air/mist rotary drilled, the GL is also recommended.

2.5 NGL and IL logs can be run in air-filled or fluid-filled, uncased boreholes or polyvinyl chloride (PVC)-cased wells. Whenever possible, geophysical logging costs can be minimized by logging several wells per mobilization. This approach minimizes mobilization costs and eliminates rig standby costs.

3.0 REFERENCES

3.1 Bateman, R. M. (1985), *Log Quality Control* International Human Resources, Corporation, Boston, Massachusetts.

3.2 BPB (1981), *Coal Logging Notes* BPB Instruments, Ltd., East Leake, Loughborough, UK.

3.3 Bosworth, A. F. (1972), "Log Calibrations Surface and Downhole," *Canadian Well Logging Society Journal,* v. 5, No. 4 (December), pp. 39-69.

3.4 Century (1979), *Mineral Logging Manual* Century Geophysical Company, Tulsa Oklahoma.

3.5 Cochrane, J. (1972), "Principles of Log Calibration and their Application to Log Accuracy," *Jour. Pet. Tech.*, v. 24, pp. 817-826.

3.6 Dresser Atlas (1976), Calibration Procedures Manual Dresser Atlas Industries, Houston, Texas.

3.7 Dresser Atlas (1982), *Well Logging and Interpretation Techniques*, Dresser Atlas Industries.

3.8 Ellis, D. V. (1987), *Well Logging for Earth Scientists*, Elsevier, New York, New York.

3.9 Gearhart (1985), *Calibration Manual* Gearhart-Owen Industries, Fort Worth, Texas.

3.10 Gräper, F. (1994), "Wireline Data Quality Control: From Wellsite to Evaluated Product," *The Log Analyst*, v. 35, No. 5, pp. 39-42.

3.11 Hearst, J. R., and Nelson, P. H. (1985), *Well Logging for Physical Properties*, McGraw-Hill Book Company, New York, New York.

3.12 Hill, D. G. (1986), "Geophysical Well Log Calibration and Quality Control," in *Borehole Geophysics for Mining and Geotechnical Applications*, P. G. Killeen, Ed., Geological Survey of Canada, Paper 85-27, pp. 379-392.

3.13 Hill, D. G. (1994), *Electrical Resistivity Log Product Quality Memorandum*, Interdepartmental Memo dated December 22, 1994.

3.14 Hill, D. G. (1994), *Gamma Ray Log Product Quality Memorandum*, Interdepartmental Memo dated October 6, 1994.

3.15 Hill, D. G. (1994), *Induction Log Product Quality Memorandum*, Interdepartmental Memo, March 18, 1994.

3.16 Hill, D. G. (1995), *Guarded Electrode Resistivity Log Product Quality Memorandum*, Draft Interdepartmental Memo dated January 31, 1995.

3.17 Hill, D. G. (1995), *Proposed Borehole Geophysical (Wireline) Log Measurement Protocols for Environmental Monitor, Injection, and Extraction Wells* Interdepartmental Memo dated March 7, 1995.

3.18 Hill, D. G. (1995), *Proposed Wireline Measurement Witness Responsibilities and Check Lists for Environmental, Monitoring, Injection, and/or Extraction Wells.* Draft Interdepartmental Memo dated March 7, 1995.

3.19 Keys, W. K. (1989), *Borehole Geophysics Applied to Ground-Water Investigations*, National Water Well Association, Dublin, Ohio.

3.20 McNeill, J. D., Bosnar, M., and Snelgrove, F. B. (1990), "Resolution of an Electromagnetic Borehole Conductivity Logger for Geotechnical and Ground Water Applications," Geonics Limited Technical Note TN-25.

3.21 Qualheim, B., (1990), "Borehole Geophysical Logging" in *Environmental Restoration Program Standard Operating Procedures (SOPs),* D. Rice, P. Daley, and T. Carlsen, Eds., Lawrence Livermore National Laboratory, M-245, SOP 1.6.

3.22 Ross, D., Alger, R., Bishop, D., Dumanoir, J., Hawkins, J., Millard, F., Wall, T., and Yarborough, D. (1979), *The Art of Ancient Log Analysis*, Society of Professional Log Analysis.

3.23 Schlumberger (1974), *Calibration and Quality Standards* Schlumberger Limited, Houston, Texas.

3.24 Schlumberger (1979), *Calibrations Guide* Schlumberger Limited, Houston, Texas.

3.25 Schlumberger (1984), *Resistivity Measurement Tools* Schlumberger Limited, Houston, Texas.

3.26 Schlumberger (1991), *Log Interpretation: Principles/Applications*, Schlumberger Limited, Houston, Texas.

3.27 Schlumberger (1991), *Log Quality Control Reference Manual* Schlumberger Limited, Houston, Texas.

3.28 Sciacca, J., and Manchon, B. (1994), "Log Quality Workshop: Recognizing a Good Borehole Geophysical Log," presented at: *Eighth National Outdoor Action on Aquifer Restoration, Groundwater Monitoring and Geophysical Methods*, National Ground Water Association.

3.29 Theys, P. P. (1991), *Log Data Acquisition and Quality Control*, Editions Technip, Paris.

3.30 Yearsley, E. N., and Crowder, R. E. (1990), "State-of-the-Art Borehole Geophysics Applied to Hydrogeology," In *Proceedings from Canadian-American Conference on Hydrogeology*, Calgary, Canada.

3.31 WELENCO (1993), *Water Well Geophysical Logs* WELENCO, Inc., Bakersfield, California.

4.0 DEFINITIONS

See SOP Glossary.

5.0 RESPONSIBILITIES

5.1 Division Leader (DL)

The DL's responsibility is to ensure that all activities performed by ERD at the Livermore Site and Site 300 are performed safely and comply with all pertinent regulations and procedures, and provide the necessary equipment and resources to accomplish the tasks described in this procedure.

5.2 Project Leader (PL)

The PL's responsibility is to ensure that all activities are performed safely and comply with all pertinent regulations and procedures, work is authorized through an IWS, institution requirements of the Findings and Determination are followed, and there is sufficient funding to initiate the work.

5.3 Hydrogeology & Decision Support Group Leader (HDSGL)

The HDSGL's responsibility is to ensure that proper procedures are followed for activities (i.e., drilling, borehole logging and sampling, monitor well installations and development).

5.4 Hydrogeologist (HG)

The HG is responsible for the overall investigation, planning (includes generating a Drilling Work Plan and/or Sampling Plan), assessment, and remediation within a study area, geologic and hydrogeologic information, quantitative well log analysis, and decisions regarding sample depths and analyses required. The HG is also responsible for correlating logs between boreholes and developing subsurface geology models and for resolving any QA/QC issues that cannot be resolved at the drill site.

5.5 Site Safety Officer (SSO)

The SSO's responsibility is to ensure safe facility operations and that the work is performed in compliance with applicable IWSs, Site Safety Plans, SOPs, and any other applicable safety related documentation. This position primarily applies to Site 300 treatment facility operations. At the Livermore Site, these tasks are performed by the FE & FO or other personnel as assigned.

5.6 Drilling Coordinator (DC) or Designee

The DC or designee interface between the DGS, HG, and the field activities and is responsible for providing the Drilling Work Plan to the Drilling Geologist, monitoring the progress of drilling and geophysical activities daily.

5.7 Drilling Geologist Supervisor (DGS) or Designee

The DGS or designee is responsible for coordinating the overall drilling and Petrophysical program, notifying the geophysical logging contractor when logging operations are required, and communicating any requests or changes in the logging program that will result in changes in geophysical logging charges. The DGS also provides QA/QC and qualitative well log analysis on final log plots and works with the Data Management Team (DMT) to ensure that geophysical data is uploaded into the ERD database.

5.8 Drilling Geologist (DG)

The DG's responsibility is to provide the logging engineer with a logging program and documenting all logging operations on the *Wireline Logging Summary* (Attachment B), ensuring that the correct logs are run in the specified order, and all calibration and QA/QC procedures specified in the current versions of *Proposed Borehole Geophysical (Wireline) Log Measurement Protocols for Environmental Monitor, Injection, and Extraction Wells* (*Reference material) and *Proposed Wireline Measurement Witness Check Lists for Environmental, Monitoring, Injection, and/or Extraction Wells* (*Reference material) are carried out.

*The above reference material can be obtained from ERD Library.

5.9 Geophysical Logging Contractor

The geophysical logging contractor's responsibility is to provide a qualified logging engineer (person qualified and familiar with logging equipment, operations**,** LLNL procedures) and the following:

- Properly calibrated logging tools.
- Sufficient back-up tools to ensure that all requested services will be successfully performed.
- Ensure that all measurements have a common depth basis (i.e., depth-matched data).
- Mud/mud filtrate resistivities (R_m, R_{mf}).
- Borehole corrected data.
- Paper copy field prints of all logs at the proper depth and horizontal scales.
- Paper and reproducible copy final prints of all logs at the proper depth and horizontal scales.
- Mud density and viscosity.
- Log ASCII standard (LAS)-formatted diskettes containing all digital measured and processed log data.
- CDs containing color image files of OPTV log runs.

5.10 Engineering and Operations Group (EOG)

The Engineering and Operations Group is responsible for removing pumps from monitor wells prior to logging.

5.11 Modeling Team (MT)

The Modeling Team is responsible for converting subsurface geology and petrophysical models into quantitative, flow and volumetric models of the subsurface.

5.12 Data Management Team (DMT)

The DMT is responsible for the disposition of the original documents received as a result of performing work activities described by this SOP.

6.0 PROCEDURES

6.1 Discussion

6.1.1 Borehole geophysical measurements are obtained from geophysical logging tools suspended in uncased boreholes or cased wells. These tools measure a variety of physical properties of geologic materials penetrated by the borehole, including:

A. Formation electrical resistivity or conductivity.

B. Formation electrochemical contrasts between the borehole and *in situ* fluids.

C. Formation natural gamma ray emissions.

D. Borehole diameter.

E. Formation acoustic velocity.

F. Formation hydrogen ion concentrations.

G. Acoustic reflectance of the borehole wall.

H. Formation electron density.

6.1.2 Measurements are made as the tool is pulled up the borehole at a constant rate on a multi-conductor armored cable (or wireline) using a power supply at the surface (Attachment C). Measurement depth is controlled by passing the cable over a calibrated sheave. Downhole data are transmitted via the cable to a computer at the surface where the data are stored and processed. Geophysical logs are paper copy records of borehole measurements plotted with amplitude on the horizontal axis and depth on the vertical axis.

6.2 Office Preparation

6.2.1 Develop a logging program that is consistent with the expected borehole conditions and characterization objectives. The logging program should specify all pertinent borehole information, such as:

A. Borehole identification number.

B. Borehole location.

C. Bit size.

D. Surface elevation (if available).

E. Services requested (logs) and order for running logs.

F. Drilling fluid type.

G. Casing details.

H. Amplitude and depth scales for each log.

6.2.2 Coordinate drilling operations with desired logging conditions.

A E-Log, FWS, and GL cannot be run in air-filled or cased boreholes.

B. BHTV should not be run in air rotary or hollow stemmed auger drilled borehole.

C. Borehole video should not be run in mud filled boreholes.

6.2.3 Notify the logging contractor 24 to 48 hr ahead of time of the required logging tools and appropriate contractual information (e.g., release numbers, etc.) before logging operations begin.

6.2.4 When logging operations are planned for existing wells, notify the Engineering Group two to three weeks prior to logging to schedule pump removal(s), if necessary.

6.3 Safety Considerations

6.3.1 The procedures described in the following sections will be conducted in accordance with LLNL Integration Work Sheet (IWS) 11582 "Geophysical Logging at the Livermore Site" and LLNL IWS 12365 "Geophysical Logging at Site 300" under the direction of a DG.

6.4 Field Preparation

6.4.1 Provide the logging engineer with a logging program, and discuss any unusual conditions or departures from standard protocol prior to logging operations.

6.4.2 Provide logging engineer with the following information for the log header:

A. Borehole location.

B. Borehole ground level elevation.

C. Borehole depth.

D. Fluid level.

E Depth of any potentially problematic zones.

6.4.3 Prepare surface electrode locations for those wells to be logged by E-log and/or Guard log by wetting the site daily to lower electrode contact resistances.

6.4.4 When logging mud-rotary boreholes, a 2- to 5-gal sample of the drilling mud will be collected during borehole conditioning and set aside for the logging contractor to determine mud resistivity (Rm), mud cake resistivity (Rmc), mud filtrate resistivity (Rmf), mud density, and mud viscosity.

6.4.5 Remove pumps from any wells prior to cased-hole logging operations.

6.5 Logging Order

6.5.1 Livermore Site

In uncased boreholes, run the E-Log, followed by natural gamma ray, guarded electrode resistivity log, and induction log. Because the caliper log could disturb the mud cake that protects the borehole, causing the borehole to collapse, the caliper log should be run last. If unusual borehole conditions develop, which could significantly increase the risk of losing a logging tool, the DG and DC should be notified before continuing logging operations.

6.5.2 Site 300

In uncased boreholes, the caliper log is usually run first to evaluate any unusual hole conditions (i.e., large diameter "wash outs" or small diameter "tight" zones). In situations where an OPTV log is desired and borehole stability is known to be good, it is preferable to run the OPTV tool first in order to obtain the best quality image. If unusual borehole conditions develop, which could significantly increase

the risk of losing a logging tool, the DG and DC should be notified before continuing with logging operations.

6.5.3 Both Sites

E-Logs, guard logs, FWS, and BHTV must be run in uncased, fluid-filled boreholes. Electromagnetic induction logs cannot be run in metallic cased wells, but yield excellent results in PVC-cased boreholes. Natural gamma ray logs can be run in cased wells or uncased boreholes.

6.6 Calibration

6.6.1 Basically, there are three types of tool calibration standards:

1. Primary calibration standards involve permanent test pits, which are primarily used to calibrate logging tool prototypes, and shop standards.
2. Secondary or shop calibration standards are transportable calibration standards that are referenced to the primary standards. Shop standards are often too bulky to be easily transported to field sites. Logging sondes should be checked against these standards on a monthly basis.
3. Tertiary or field standards are compact enough that they can be easily taken to the field to verify that the sonde calibration has not drifted from the shop calibration at each logging job.

6.6.2 Conduct all tool calibration and QA/QC procedures as specified in the *Wireline Protocols and Witness Checklist*. See Section 5.5 of this SOP, for instructions to locate current versions of these documents.

6.7 General

6.7.1 Document all logging operations on a *Wireline Logging Summary* (Attachment B).

6.7.2 Always repeat geophysical logs over intervals of at least 50 ft., including completion interval(s), intervals of log response extremes, and any zones of questionable data on the main log. Display repeat sections on all field and final prints.

6.7.3 Clearly display all log scales at the top and bottom of all field and final prints.

6.7.4 Clearly display all shop and field calibration records on all field and final prints.

6.8 Natural Gamma Log (NGL) Operation

NGL tools detect gamma radiation emitted by radionuclides in the formation. The most common natural gamma ray emitting radionuclides are Potassium (^{40}K) and Uranium- and Thorium-series daughter products (^{214}Pb and ^{214}Bi). NGL are commonly used to characterize stratigraphy and make correlations between wells. They can also be used to infer quantitative estimates of effective porosity and hydraulic conductivity of the materials penetrated by the borehole. This log is widely used because it can be run in air- or fluid-filled conditions, drill pipe, and cased or uncased holes.

6.8.1 NGLs record gamma radiation emitted from the formation in counts per second (cps) or American Petroleum Institute (API) units. The recommended scale for field prints is 0–100 or 0–200 API units or counts increasing from left to right (LTR).

6.8.2 NGLs should be run at a logging speed of 10 ft/min, or slower.

6.8.3 NGL field and final prints should include standard source (e.g., API calibrator) calibration and a three-min. stability check documentation.

6.8.4 Use only 1.25 by 6 in. (or 1 by 8 in.) sodium iodide (NaI) crystal or other high efficiency detectors.

6.7.5 Use a 5-sec time constant for 1 by 6 in. detectors and a 4-sec time constant for 1 by 8 in. detectors.

6.7.6 In final prints, display NGL profiles in the left track (API Track 1) with API or CPS units increasing LTR.

6.9 Electromagnetic Induction Log (IL) Operation

Induction tools operate on the principle of electromagnetic induction. An electrical current is induced in the formation by generating a radio frequency (20–40 kHz), alternating current in the transmitting coil of the IL tool. The induced current is proportional to the formation electrical conductivity and is measured by a receiver coil spaced 1.5 to 2.0 ft from the transmitter. IL tools can be run in air-filled or fluid-filled conditions, and uncased boreholes or wells that are cased with non-electrically conductive material. IL logs are ideal for characterizing stratigraphy and making correlations between wells. They are also useful for inferring formation porosity.

6.9.1 The IL log is recorded in electrical conductivity units of millisiemens/meter (mS/m). Field and final prints should display both electrical conductivity in mS/m on the right of the depth track (display RTL, in API Track 3) and electrical resistivity in ohm-m (LTR 2-3 cycle logarithmic display, in API track 2). Horizontal scales should be selected to maximize the amount of log that remains "on scale."

6.9.2 Run the IL log at 20 ft/min.

6.9.3 IL final prints should include tool shop and field calibration documentation.

6.9.4 In final prints, display IL profiles on the tracks to the right of the depth track in electrical resistivity (ohm-m) 2-3 cycle logarithmic units increasing to the right in API Track 2, and conductivity mS/m units decreasing to the left in API Track 3.

6.10 Galvanic Resistivity (E-log or Guard) Operation

Both Electric Log (E-Log) and GL tools measure apparent formation resistivity directly. An electrical current (I) is passed between a current source electrode on the logging tool and a current return electrode at the surface. Electrical potential differences (V) are measured between electrodes on the surface and at depth. The resulting V/I ratios are converted to apparent resistivities, using algorithms based upon the electrode array geometries and potential theory. Because these electrical tools are galvanically coupled

directly to the earth with their electrodes, the techniques are called galvanic resistivity methods. Galvanic resistivity logs are ideal for characterizing stratigraphy and making correlations between wells. They are also useful for inferring formation porosity. These logs must be run in fluid-filled, uncased boreholes.

6.10.1 Galvanic resistivity log 16-in. normal (R_{SN}), 64-in. normal (R_{LN}), and guard (R_G) resistivities are recorded in units of ohm-meter (ohm-m). Field and final prints should display electrical resistivity in 2-3 cycle logarithmic ohm-m (LTR display in API Tracks 2 or 3). Horizontal scales should be selected to maximize the amount of log that remains "on scale."

6.10.2 Run the galvanic resistivity logs at 20 ft/min.

6.10.3 Galvanic resistivity final prints should include tool field calibration documentation.

6.10.4 In final prints, display galvanic resistivity profiles on the track to the right of the depth track (API Tracks 2 or 3) in 2-3 cycle logarithmic electrical resistivity (ohm-m) units increasing to the right.

6.11 Spontaneous Potential Log (SP) Operation

SP is an electrochemical phenomena resulting from salinity differences between the mud filtrate and *in situ* waters and the passage of saline waters through clays. High clay mineral content zones act as cation selective membranes, allowing cations to pass but repelling anions. This selectivity will result in a cation deficiency on the more saline side of the membrane and a cation surplus on the low salinity side. If the *in situ* waters are more saline than the mud filtrate, the electrical potential (with respect to some distant reference point) opposite clay zones will be positive with respect to that opposite sands and gravels. If the mud filtrate is more saline than the *in situ* waters, the opposite will occur. SP logs must be run in fluid-filled, uncased boreholes and are used to characterize stratigraphy and formation water salinity.

6.11.1 The SP curve is a relative measurement and is presented in units of millivolts (mv).

6.11.2 Run SP logs at 20 ft/min.

6.11.3 SP final prints should include tool field calibration documentation and three-minute electrode stability checks.

6.11.4 In final prints, display SP profiles in API Track 1 (left hand track) in mv units increasing LTR.

6.12 Borehole Video Log (BVL) Operation

BVL cameras are used to view uncased boreholes and cased wells. Best results are obtained in air-filled or clear fluid-filled conditions. Both black and white and color cameras are used to evaluate fractured bedrock, inspect borehole "washouts," and inspect casing conditions.

6.12.1 Display the depth and well identification on video log and videotape.

6.12.2 Centralize the borehole video camera in the hole.

6.12.3 Make repeat runs over intervals specified by the DG.

6.12.4 Allow sufficient time for the BVL camera to equilibrate with downhole temperature and humidity conditions to ensure that the camera lens does not fog up. Distilled water can be poured in the borehole to clear fogged camera lenses.

6.12.5 Adjust brightness, contrast, and other image controls to optimize image clarity.

6.13 Three-Arm Caliper Log (CL) Operation

Three-arm calipers are used to measure borehole diameter as a function of depth. CLs consist of three to four arm sensors. CLs are usually run first when conducting uncased borehole logging operations at Site 300, and last at the Livermore Site. CLs may be run in air-filled or fluid-filled boreholes.

6.13.1 Scale the Three-Arm Caliper Log at 1 division per inch. The log should range from 3 in. to 18 in. for most boreholes.

6.13.2 Run a repeat section over any part of the hole designated by the DG.

6.13.3 Indicate the drill bit diameter on the log.

6.14 Full Waveform Sonic (FWS) Logs

FWS logs measure the acoustic inverse velocity (interval transit time) of the material penetrated by the borehole. This is accomplished by conducting multiple miniature seismic refraction shots as the sonde containing one (or two) acoustic transmitter(s) and two receivers is retrieved from the bottom of a fluid-filled uncased borehole. FWS logs are useful in correlating lithology between boreholes, evaluating porosity, indicating fractured or permeable zones, evaluating rock strength and elasticity, and identifying the top of the water table.

6.14.1 The FWS interval transit time (ITT) is displayed at μsec/ft RTL in API Tracks 2 and 3.

6.14.2 FWS tools should be run with centralizers.

6.14.3 Magnetostrictive (FWS) sources should be polarized prior to the logging job (piezometric sources need not be).

6.14.4 Run FWS at 10 to 15 ft/min.

6.14.5 Monitor FWS signals at both receivers to ensure that the automated picking algorithm does not skip cycles.

6.14.6 If possible, record full acoustic wave forms for both receiver and enhance with post processing before running the picking algorithm.

6.15 Neutron Log (NL)

The NL is used to determine total porosity under saturated conditions, meaure the amount of moisture in unsaturated zones, and to characterize lithology. NLs measure the concentration of hydrogen ions in the material (formation and fluid) penetrated by the borehole. This accomplished by bombarding the borehole wall with high energy neutrons and noting the energy decay at one or more distances from the neutron source. NL can be run in air-filled or fluid-filled boreholes as well as in PVC or steel cased wells.

6.15.1 NL use chemical radioactive sources or neutron generators. Because of this, they can only be run in cased environmental wells and special protocols must be developed.

6.15.2 NL are statistical tools like the NGL and should be run at slow logging speeds (e.g., 10–15 ft/min or slower) to improve statistics.

6.15.3 NL data should be presented as logarithmic count rates (cps or API units) LTR or neutron porosity (hydrogen index units linear RTL in API Tracks 2 and 3).

6.16 Acoustic Borehole Televiewer (BHTV)

BHTV logs are run to provide acoustic images of the borehole wall. This is accomplished by reflecting high frequency acoustic energy (at direct incidence) from the borehole wall. BHTV products are borehole wall acoustic reflectance and acoustic caliper images of the entire 360° degree borehole wall. These images can then be enhanced and interpreted on an interactive workstation to provide detailed structural and stratigraphic information about the material penetrated by the borehole. BHTV logs are run in fluid-filled, uncased boreholes.

6.16.1 BHTV should only be run in mud rotary drilled, uncased boreholes.

6.16.2 Run BHTV at 10 ft/min or slower.

6.16.3 Run BHTV tool with centralizers.

6.16.4 Run BHTV up into surface casing as a check.

6.16.5 Use interactive workstation enhancement and interpretation for BHTV images.

6.17 Optical Televiewer (OPTV)

OPTV logs are run to provide a detailed and orientated 360 degrees image of the borehole. The OPTV tool consists of a charged coupled device (CCD) video camera that can operate in either dry or water-filled portions of the borehole providing that the water-filled portion is optically clear. A light source composed of a circular series of LEDs at the bottom of the tool illuminates the borehole through a clear viewing glass. Light reflected from the borehole wall is captured by a hyperbolic mirror inside the probe. The mirror routes this reflected radial image from the borehole wall to the CCD camera. This radial image is reference to magnetic north by an onboard magnetic compass. These

images can then be enhanced and interpreted to provide detailed structural and stratigraphic information about the material penetrated by the borehole.

6.17.1 OPTV should only be run in air-mist rotary drilled, uncased boreholes.

6.17.2 Check the OPTV's tool directional reference (magnetic north) with a Brunton compass prior to logging.

6.17.3 Run OPTV at 4 ft/min or slower.

6.18 Borehole Deviation Survey (DS) Log

A DS log (a.k.a. dipmeter log) records the deviation of a borehole or well from true vertical. Deviation logs are used to determine the azimuth and inclination of the borehole at any point along its path. A borehole DS can be performed in air- or fluid-filled boreholes or wells.

6.19 Field Post Operation

6.19.1 Compare geophysical log measurements to lithologic information determined from drive samples and cores, and information from nearby wells during and after logging operations.

6.19.2 Discuss all geophysical log anomalies with logging engineer. Contact the HG immediately if any QA/QC issues arise that cannot be resolved at the drill site.

6.19.3 When multiple logs are run in the same hole, ensure that log profiles are keyed to the same depth reference. This can be done by comparing the depths of characteristic log responses from thin (1-ft to 3-ft-thick) claystone intervals on each log.

6.19.4 Compare main log with repeat section to check log repeatability. The logging engineer can provide field overplots to accomplish this.

6.19.5 The Geophysical Logging Contractor will provide five field print copies of all logs at the proper depth and horizontal scales before leaving the site.

6.19.6 Resistivities (E-Log, GL, and IL) should all agree in clay zones.

6.19.7 Depth scale: Site 300 is 5"/100 ft; Main Site is 10"/100 ft.

6.20 Office Post Operation

6.20.1 Communicate any changes in final log specifications or corrections to the logging contractor within 1 to 2 days after logging operations.

6.20.2 Log ASCII standard (LAS)-formatted diskettes of all digital logging data should be received within 1 to 2 weeks of the completion of logging operations.

6.20.3 Inspect logging tool calibration documentation for each log product.

6.20.4 The Geophysical Logging Contractor should perform depth matching and borehole corrections before delivering final displays.

6.20.5 LAS diskettes should contain all measured data (include repeat sections and calibration) and processed results (depth matched and borehole converted data).

6.20.6 Final log prints of both measured and final processed displays will be delivered within 1 to 2 weeks of completion of logging operations.

6.21 Documentation of Failures

6.21.1 Calibration Failures

All borehole geophysical tool fabricators supply tool calibration protocol with their sondes. The logging vendor should attach records of the appropriate dated and signed shop and field calibration records to all final log prints. Departures from published calibration protocol and/or standards are noted on the *Wireline Logging Summary* (Attachment B).

6.21.2 Depth Control Failures

Borehole geophysical log depth control is established by passing the logging cable over a calibrated sheave. Depth control failures are noted by comparing driller's depths to logger's depths and logger's depths on multiple trip logging jobs. Depth control problems are noted on the *Wireline Logging Summary* (Attachment B).

6.21.3 Repeat Failures

Borehole geophysical measurements are repeatable physical property measurements. Borehole geophysical vendors run short (50 to 200 ft) repeat sections (Section 6.7.2) of logs to demonstrate that their results are repeatable. Direct measurement tools, such as resistivity logs, have very narrow repeat measurement tolerance. Statistical measurement tools such as the radioactive logs have broader repeat measurement tolerances. Departures from published repeat standards are noted on the page 1 of the *Wireline Logging Summary* (Attachment B). Failure to repeat a logging measurement may be due to borehole conditions beyond the control of the Geophysical Logging Contractor. If this is the case, it should be noted on the *Wireline Logging Summary* (Attachment B).

6.21.4 Inconsistency with Offset Borehole or Well Log Results

Borehole geophysical results should be easily correlated between nearby boreholes and/or wells. Abrupt changes in the character of borehole geophysical logs between offset boreholes/wells can occur due to changes in subsurface geology, borehole conditions, and/or logging equipment failure. Inconsistencies of borehole geophysical logs that occur between boreholes/wells should be noted on page 1 of the *Wire logging Summary* (Attachment B). If these inconsistencies are due to subsurface geology or borehole conditions, note that as well.

6.21.5 Tool Specific Check Failures

Some borehole geophysical data quality checks are tool specific, such as caliper measurements of casing inside diameter and gamma ray stability checks. Failures of these tool specific quality checks should be noted on page 1 of the *Wireline Logging Summary* (Attachment B). It should also be noted if these failures are due to borehole conditions or not.

6.21.6 Presentation Failures

Borehole geophysical data quality may be good, but appears to be bad because of poor presentation by the Geophysical Logging Contractor. Borehole geophysical log presentation failures should be noted on the *Wireline Logging Summary* (Attachment B).

7.0 QUALITY ASSURANCE RECORDS

7.1 Quality Assurance reports that the borehole geophysical logging tools are: (1) working properly, (2) used according to their design, and (3) properly calibrated should be compiled for each logging job. The borehole geophysical logging contractor must document that the log products meet these conditions, and the DG must verify these conditions. The front of the *Wireline Logging Summary* (Attachment B) provides a convenient summary matrix to document any log product quality problems.

7.2 Specific borehole geophysical data quality assurance records are:

A. Wireline Logging Summary, compiled by the DG and augmented by the Petrophysicist.

B. Any QA/QC electronic mail and/or memoranda generated by the DG and/or HG for a specific log suite.

C. Deliver final versions of Geophysical Logs and Wireline Logging Summary documents to DMT.

8.0 ATTACHMENTS

Attachment A—Geophysical Logs

Attachment B—Wireline Logging Summary

Attachment C—Schematic Diagram of Borehole Geophysical (Wireline) Logging Operation

Attachment A

Geophysical Logs

Attachment A. Geophysical logs.

Geophysical log	Description	Primary purpose
Natural Gamma Log (NGL)	Used in air- or fluid-filled, cased or uncased borehole, <14 in. diam. Measures natural gamma radiation emitted by the formation.	Characterize lithology; determine stratigraphic correlations.
Electromagnetic Induction Log (IL)	Used in air- or fluid-filled, uncased or PVC-cased boreholes, 2-10 in. diam. Measures formation electrical conductivity between 2 coils, 20 in. apart by using electromagnetic induction.	Characterize lithology; determine stratigraphic correlations. Estimate formation porosity.
Spontaneous Potential (SP)	Used in fluid-filled, uncased borehole only.	Characterize lithology; evaluate formation water salinity.
Electrical Resistivity (E-Log)	Used in fluid-filled, uncased borehole only.	Characterize lithology; determine stratigraphic correlations. Estimate formation porosity.
Borehole Video Log (BVL)	Used in air- or fluid-filled; cased or uncased borehole. Produces a video tape of the borehole (or casing) using a downhole camera.	Characterize lithology and evaluate fractures in open hole; evaluate casing and screen in cased hole.
Three-Arm Caliper Log (CL)	Used in air- or fluid-filled, cased or uncased borehole. Measures borehole diameter using 3 or 4 radially spaced arms.	Determine borehole rugosity in open hole or damaged casing in cased hole.
Acoustic Borehole Televiewer (BHTV)	Used in fluid-filled, uncased boreholes. Produces an acoustical image of the borehole well and acoustical measurement of borehole diameter.	Characterize lithology; determine stratigraphic correlations.
Full Waveform Sonic (FWS) Log	Used in fluid-filled, uncased boreholes. Measures formation acoustical in velocity (interval transit time).	Characterize lithology; provide velocity information for seismic interpretation; estimate formation porosity.
Guarded Electrode Resistivity Log (GL)	Used in fluid-filled uncased boreholes. Measures formation electrical resistivity.	Characterize lithology; determine stratigraphic correlations. Estimate formation porosity.
Neutron Log (NL)	Used in air or fluid PVC- or steel-cased boreholes only.	Characterize lithology; determine relative volumetric moisture content of the formation.
Digital Optical Televiewer (OPTV)	Used in air- or fluid-filled, uncased boreholes. Produces a digital image of the borehole well.	Characterize lithology, determine dip, strike, frequency, and aperture of fractures.
Borehole Deviation Survey (DS) Log	Used in air- or fluid-filled and PVC-or steel-cased wells.	Determine azimuth and inclination of borehole. Calculates true depth of borehole at any point.

Attachment B

Wireline Logging Summary

GENERAL INFORMATION:

WIRELINE LOGGING SUMMARY

Operating Company	Well Name		Division	State / Province	County / Parish	Country
Section	Township / Survey	Range / Block	Surface Location			API Number
Log Job No	Prospect / Field		Well Type ☐ Exploration ☐ Proj Inj ☐ EOR ☐ Production ☐ Proj Prod ☐ Other _____			Accession Number
Logging Service Order #	Service Company		Logging Engineer	Service Co District	Logging Unit	Lease Number / LSD Number
Start Date	Bit Size	Last Casing Size / Depth	Chevron Witness	F E Specialist	Date	I D Number

LOG QUALITY

This section applies only to the logs delivered at the well site.

SEPARATE COMBINATION TOOLS INTO INDIVIDUAL SERVICES

[✓] Check only those boxes where problems exist	LOG / SERVICE	1.	2	3	4.	5.	6.	7	8.	9.	10
	SUITE #										
	RUN #										
CALIBRATION FAILURES?											
DEPTH CONTROL FAILURES?											
REPEAT FAILURES? Check if the failure is caused by borehole conditions											
ARE THE LOGS CONSISTENT WITH OFFSETS? Check if the failure is caused by borehole conditions											
TOOL SPECIFIC CHECKS FAILURES? Check if the failure is caused by borehole conditions											
PRESENTATION FAILURES?											
LOG QUALITY RATING [1 (Poor) to 4 (Excellent) Scale; 4 can be given if the failure is caused by borehole conditions]											

LOG QUALITY COMMENTS:
Explain all problems in the LOG QUALITY section

DATA SUMMARY

LOG INTERVALS

	BOTTOM	TOP
1		
2		
3		
4		
5		
6		
7		
8		
9		
10		

SIDEWALL CORES

	TOTAL
Total SWS Attempted	
Recovered	
Misfired	
Lost Bullets	
No Recovery	

FORMATION TESTER

	TOTAL
Pressure Attempts	
Good Pressure Sets	
Fluid Attempts	
Good Fluid Samples	

WELL CONDITIONS

Maximum Temperature
Maximum Deviation
Pump Down or Tollpipe Assist Required
Yes No
Was pressure control equipment used?
Yes No

TIME SUMMARY

(Use quarter hour increments)

TOTAL JOB LOGGING TIME (1st rig up to last rig down) _____ hrs

OPERATIONS LOST TIME (Hole conditioning, etc.) _____ hrs

TOTAL LOGGER DOWNTIME _____ hrs

NUMBER OF FAILURES > 30 MIN _____

OPERATIONAL EFFICIENCY RATING (1 (Poor) to 4 (Excellent) Scale)

OPERATIONS SUMMARY: (Include times of bit reaching TD, Circulation, Wiper trips; Logger's arrival & release from location; All wireline runs into hole including rig up, time in, on bottom, off bottom, time out, Incomplete log run due to tool failure or hole problems; Well site computed logs; Provide as detailed a chronology as possible)

OPERATING COMPANY		WELL NAME						IDENTIFICATION NO.
Date	Operations (Chronologically)	Time Summary Start	End	TD Driller / Logger	BHT	Hrs. of Circ.	Down Time Hrs.	Remarks (Calibration, repeatability, tool problem, etc.)

REMARKS & EXPLANATIONS: (Include any special circumstances that might have affected the logging operation, i.e. Were backup tools available? Was lost time due to equipment or operator error? Are there any questions concerning charges on the service order? Do any topics need to be discussed with salesmen? Were any tools logged out of tolerance? etc.)

Attachment C

Schematic Diagram of Borehole Geophysical (Wireline) Logging Operation

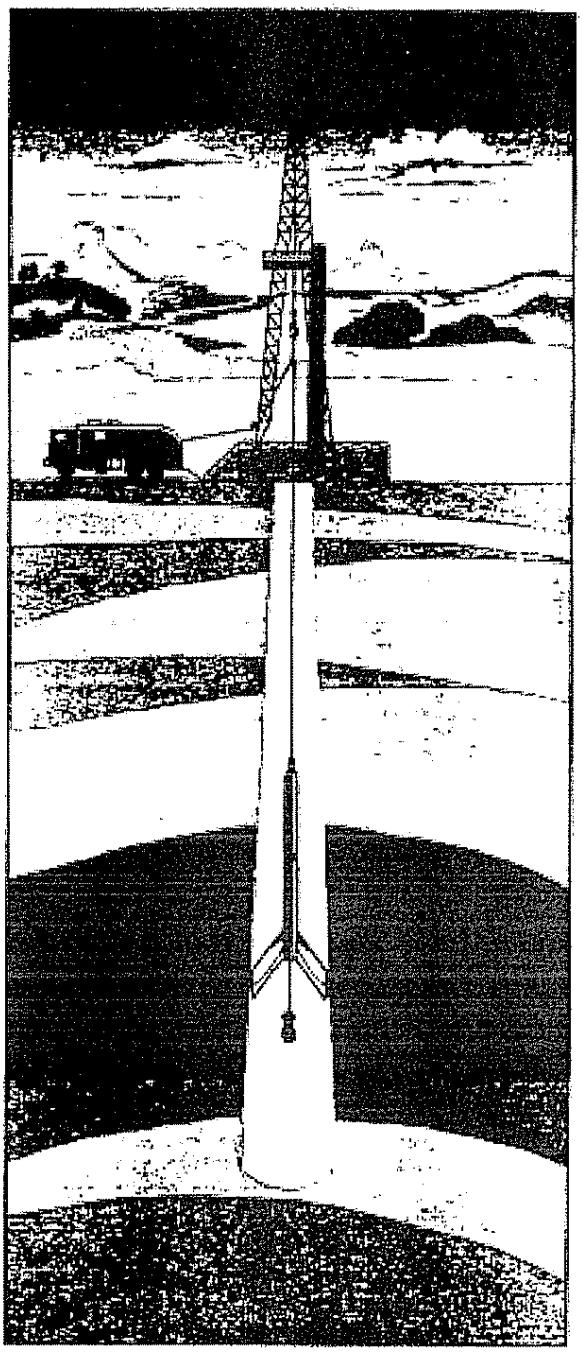

Attachment C. Schematic diagram of boreholegeophysical (Wireline) Logging Operation.

LLNL Environmental Restoration Division (ERD)
Standard Operating Procedure (SOP)

ERD SOP 1.7: Well Closure—Revision: 4

AUTHOR(S):
M. Taffet

ENVIRONMENTAL RESTORATION DIVISION
CONTROLLED COPY
_____
THIS IS A RED STAMP
ERD

APPROVALS: Date

Jesse Yow — 8/30/06
Division Leader

4/12/06
Hydrogeology Decision Support Group Leader

CONCURRENCE: Date

Rebecca Goodrich — 8/3/06
QA Implementation Coordinator

1.0 PURPOSE

The purpose of this SOP is to describe methods for decommissioning wells *in-situ* by perforation and subsequent grout injection or by the removal of construction materials followed by grout injection. The well closure technique is commonly dependent on the nature and type of well completion materials. *In-situ* well closure involves casing perforation and is used when metal casing cannot be easily removed. Well closure by removal of casing is employed for any well material where it is practical to drill the well out using hollow stem augers or a rotary technique with a drill bit. This latter method is primarily used for wells constructed completely with polyvinyl chloride (PVC) casing. The Drilling Geologist Supervisor (DGS) will determine if a combination of closure methods is required for wells with one or more conductor casings, which are usually constructed of steel. Local regulatory agencies will be consulted if, for any reason, a well cannot be decommissioned solely by the methods discussed within this SOP.

2.0 APPLICABILITY

ERD work activities are conducted within the framework of the institutional Integrated Safety Management System (ISMS). The Environmental Management System (EMS) is a component of the ISMS, which is also supported during the planning, performing, and evaluation of the

work processes. This procedure is applicable to wells that are to be permanently sealed, based on the present or future potential for a well to act as a conduit for the vertical migration of hazardous materials in ground water. Other characteristics may also provide cause for sealing a well. A well meeting any of the criteria listed below should be considered for closure:

A. Multiple screened intervals or a single screened interval over several water-bearing zones.

B. Lack of annular seal.

C. Any well suspected of allowing migration of contaminants to non-contaminated zones.

D. Threatened water supply wells located at or near an existing plume margin.

E. Unknown or undocumented well construction details.

F. Improper well construction or damaged well.

G. Abandoned well (DWR, 1981).

H. Data from a well is no longer needed.

3.0 REFERENCES

3.1 Department of Water Resources (1991) *Water Well Standards: State of California*, California Resources Agency, Bulletin 74-90 (Supplement to Bulletin 74-81).

3.2 LLNL (2005a), *Site Safety Plan for Lawrence Livermore National Laboratory CERCLA Investigations at Site 300*, Environmental Protection Department, Lawrence Livermore National Laboratory (UCRL-AR-21172 Rev. 4).

3.3 LLNL (2005b), *Site Safety Plan for Lawrence Livermore National Laboratory CERCLA Investigations at Livermore Site*, Environmental Protection Department, Lawrence Livermore National Laboratory (UCRL-AR-21174 Rev. 3).

4.0 DEFINITIONS

See SOP glossary.

5.0 RESPONSIBILITIES

5.1 Division Leader (DL)

The DL's responsibility is to ensure that all activities performed by ERD at the Livermore Site and Site 300 are performed safely and comply with all pertinent regulations and procedures, and to provide the necessary equipment and resources to accomplish the tasks described in this procedure.

5.2 Project Leader (PL)

The PL's responsibility is to ensure that all activities are performed safely and comply with all pertinent regulations and procedures, work is authorized through an IWS, and there is sufficient funding to initiate the work.

5.3 Hydrogeology & Decision Support Group Leader (HDSGL)

The HDSGL ensures that the proper procedures are followed for all well abandonment activities.

5.4 Hydrogeologist (HG)

The HG is responsible for the overall investigation, planning, assessment, and remediation within a subproject area and in determining wells that may require abandonment due to meeting any of the requirements in Section 2.0. The HG should obtain concurrence from the PL prior to proceeding with closure of an existing well. The HG also assists the DC in determining the best strategy for successful and proper abandonment.

5.5 Site Safety Officer (SSO)

The SSO's responsibility is to ensure that fieldwork is conducted safely and in compliance with applicable IWSs, Site Safety Plans, SOPs, and any other applicable safety related documentation.

5.6 Drilling Coordinator (DC)

The DC schedules overall drilling-related activities at the Livermore Site and provides the interface between the DGS, Hydrogeologist (HG), and the field personnel.

5.7 Drilling Geologist Supervisor (DGS)

The DGS schedules overall drilling-related activities at Site 300, and coordinates the schedules for drilling geologist subcontractors and obtains necessary equipment.

5.8 Drilling Geologist (DG)

The DG is responsible for conducting and documenting drilling and well abandonment, following Integration Worksheets (IWSs), SOPs, and the well work plan, and to immediately inform the DC of any nonconformances and unforeseen circumstances that require resolution.

5.9 Data Management Team (DMT)

The DMT is responsible for the disposition of the original documents received as a result of performing work activities described by this SOP.

6.0 PROCEDURES

The abandonment process should minimally alter the geologic medium surrounding the well to be abandoned. It is essential that the process does not introduce hazardous or foreign substances into the well or borehole, create conduits that facilitate the spread of existing contaminants, or does not adequately remove well materials and seal the resulting borehole.

6.1 Office Preparation

Prior to commencement of field activities, review this SOP and perform preparation activities per SOP SOP 4.1 "General Instructions for Field Personnel" including participation in the ERD Field Investigation Orientation Lesson Plan (course number EP7033-015).

6.1.1 *In-Situ* Closure

A. Obtain all pertinent records such as drillers' logs, water level measurements, perforated intervals, and any required permits or access agreements.

B. Obtain PL concurrence for well closure.

C. Obtain necessary permits for off-site wells.

D. Obtain Mills Knife perforation equipment and air compressor, making sure the correct shoes are available for each casing diameter.

E. Determine the depth intervals of clay-rich zones greater than 5-ft thick from geophysical logs (gamma ray), drillers' logs, or other well logs.

F. Determine zones to perforate from evaluation of logs, taking into account the zones that had been perforated previously.

G. Determine or estimate the depth of any nearby ground water contaminant plumes for each well location.

H. Coordinate schedule/actions with DC.

6.1.2 Well Removal

A. Obtain all pertinent records such as drillers' logs, water-level measurements, perforated intervals, and any required permits or access agreements. Conduct a downhole camera survey if additional information is necessary.

B. Coordinate schedule/actions with DC.

6.2 Safety Considerations

6.2.1 Work is to be performed in accordance with the LLNL Site Safety Plans, the Quality Assurance Project Plan (QAPP), applicable ERD SOPs, and ERD Integration Work Sheets (IWS). Work activities described by this SOP shall be performed in accordance with IWS 12654 "Drilling in VOC and Mixed Waste-contaminated soils at the Livermore Site" and IWS 11578 "Drilling in VOC-

contaminated soils at the Livermore Site." Drilling activities at Site 300 should be performed in accordance with IWS 12684 "Site 300 Drilling Activity."

6.3 Field Preparation

Follow procedures outlined and/or referenced in this SOP when performing field work.

6.3.1 Remove pump and piping from the well.

6.3.2 Confirm that there are no obstructions in the well. For deep wells (more than 100 ft deep), run video logs and geophysical logs as needed to ascertain casing condition, presence and nature of existing perforations, and location of high and low permeability intervals.

6.3.3 Check drill rig access to the well.

6.3.4 Remove existing vault or stovepipe and concrete pad, if necessary.

6.4 Operation

Follow procedures outlined and/or referenced when performing field work.

6.4.1 Document the following for all wells**:**

A. Well name.

B. Sounded depth of well.

C. Water level, if applicable.

D. Casing size and materials.

E. Drilling company and driller.

F. Drilling Supervisor and Drilling Geologist.

G. Date/time for start and completion of closure.

H. Closure method(s) and materials used.

I. If no survey data exists, prepare a detailed site map accurately showing the well in relation to permanent features.

6.4.2. *In-Situ* Closure

A. Select intervals to perforate from the drillers' log, geophysical log, and video log if available. Determine if previously perforated zones should be re-perforated due to possible compromise of casing.

B. Operate Mills Knife perforator to cut six 1-in. slots per foot, with four rows at 90 degrees from one another.

C. Perforate all previously unperforated low-permeability zones greater than 5-ft thick within the plume (if a plume exists), and selected low-permeability zones greater than 5-ft thick between the static water level down to 20 ft below the estimated base of plume (if existing) or to 5 ft below the saturated zone.

D. If casing conditions permit, perforate all low-permeability zones (thicker than 5 ft) that occur between the estimated plume base (if existing) and total depth.

E. Calculate the minimum volume of grout required to seal the well.

F. Pump the grout from the bottom of the well to the surface through a tremie pipe using a cement mixture (2 lb of commercial bentonite powder and approximately 6.5 gal of water added per 94-lb bag of cement).

G. When the grout reaches the surface, verify that the volume of grout used is equal or greater than the calculated volume in Step E.

H. Apply pressure from the surface using either an air-actuated packer or a welded cap (at the surface). Apply at least 50 pounds per square inch of pressure for approximately 1 to 2 hr until stable.

I. The following day, seal the surface by perforating a zone from 2 to 20 ft and top off to the surface with a final stage of grout.

6.4.3 Well Removal

A. Drill out the casing using hollow stem augers or a drill bit, as determined by the driller. For both methods, the drill bit should be slightly larger than the diameter of the original well borehole to remove all of the filter pack.

B. To the extent feasible, ensure that all of the casing has been removed. When using a drill bit, frequently check and document that pieces of casing are in the cuttings. Also note any decrease in drill rig chattering, which may indicate that the bit has deflected off the casing.

C. Once the well and sandpack are completely removed, an open borehole remains. Calculate the minimum volume of grout required to fill the open borehole.

D. Pump the grout from the bottom of the borehole to the surface through a tremie pipe (grouting with a tremie pipe is not required for dry boreholes that do not exceed 30-ft depth). Place the tremie pipe 5 to 10 ft off the bottom of the borehole and pump a cement mixture (2 lb of commercial bentonite powder mixed with approximately 6.5 gal of water per 94-lb bag of cement) through this pipe until undiluted grout flows from the borehole at the ground surface. The tremie pipe should be withdrawn gradually during this process.

E. When the grout reaches the surface, verify that the volume of grout used is equal or greater than the calculated volume in Step C.

F. While waiting for the grout to set, cover and barricade the borehole to prevent introduction of foreign material and to protect the public.

G. After the grout has set (about 72 hr), fill any depression in the grout due to settling. Use a grout mixture similar to that described above.

6.5 Post Operation

6.5.1 Perform post-work activities described in SOP 4.1, Section 6.4, including equipment decontamination, proper waste disposal, equipment inventory, documentation review, and field form and logbook delivery to the DMT.

6.5.2 The DC should ensure that all field forms are maintained and submitted. The DG's report should give a complete description of work performed, number of hours on the job, shutdown due to breakdown, length of casing removed/perforated, materials used, and other pertinent data.

7.0 QUALITY ASSURANCE RECORDS

7.1 Field Forms

7.2 Logbooks

8.0 ATTACHMENTS

Not applicable.

LLNL
Environmental Restoration Division (ERD)
Standard Operating Procedure (SOP)

ERD SOP 1.8: Disposal of Investigation-Derived Wastes (Drill Cuttings, Core Samples, and Drilling Mud)

REVISION: 3	AUTHOR(S): T. Carlsen and S. Gregory REVIEWER(S): J. Aarons*, L. Berg, and L. Ferry
EFFECTIVE DATE: January 1999	Page 1 of 13

ENVIRONMENTAL RESTORATION DIVISION
CONTROLLED COPY
#
THIS IS A RED STAMP
ERD

APPROVAL Date
Albert L Lamanc 5/4/99
Division Leader

APPROVAL Date
5/4/99
Hydrogeology Group Leader

CONCURRENCE Date
4/27/99
QA Implementation Coordinator

*Weiss Associates

1.0 PURPOSE

To ensure that investigation-derived waste (IDW) consisting of drill cuttings, unused core samples, and drilling mud/initial muddy development water from Site 300 and Livermore Site are properly disposed of in a manner consistent with the protection of human health and the environment using the guidance provided by Reference 3.12 below. This guidance states that "the management of investigation-derived wastes (IDW) must ensure protection of human health and the environment and comply with certain applicable or relevant and appropriate requirements (ARARs)." The guidance further states that "as a general rule, it will be necessary to use best professional judgment, in light of the site-specific conditions, to determine whether an option is protective of human health and the environment." The following SOP reflects LLNL's evaluation of ARARs and its best professional judgment concerning the management of investigation-derived drill cuttings, core samples, and drilling mud.

2.0 APPLICABILITY

The following procedure and information is applicable to all activities which can generate investigation-derived wastes (i.e., drill cuttings, core samples, and drilling mud/initial muddy development water). The following sections describe the handling, screening and disposal of drilling wastes containing: volatile organic compounds (VOCs), petroleum products, metals, tritium, uranium, and high-explosive (HE) compounds.

3.0 REFERENCES

3.1 10 CFR 61.55.8-40-112 and 8-40-205 BAAQMD, Bay Area Air Quality Management District (Revised draft 1/11/89) Regulation 8, Organic Compounds Rule 40 Aeration of Contaminated Soil and Removal of Underground Storage Tanks.

3.2 California Regional Water Quality Control Board–Central Valley Region (1992), *Water Quality Control Plan (Basin Plan) For the California Regional Water Quality Control Board Central Valley Region*, Second Edition.

3.3 California Regional Water Quality Control Board–San Francisco Bay Region (1982), *Water Quality Control Plan (Basin Plan), San Francisco Bay Basin, State of California*, Oakland, CA.

3.4 Carlsen, T. M., Ed. (1991), *Lawrence Livermore National Laboratory Site 300 Environmental Investigations Quarterly, April-June 1991*, Lawrence Livermore National Laboratory, Livermore Calif. (UCAR-10194-91-2).

3.5 Crow and Lamarre (1990), *Remedial Investigation of the High-Explosives (HE) Process Area*, Lawrence Livermore National Laboratory Site 300 (UCID-21920).

3.6 Foxboro Company (1985), Instruction Manual Foxboro Model 128 Century Organic Vapor Analyzer, M1 61 1-132.

3.7 Hoffman, F. and M. D. Dresen (1990), "A Method to Evaluate the Vertical Distribution of VOCs in Ground Water in a Single Borehole," *Ground Water Monitoring Review*, Spring 1990, 10(2), 95-100.

3.8 Isherwood, W. F. (1994), letter to Vincent Chrisitian, California Regional Quality Control Board, San Francisco Bay Region (2), regarding using soils concerning trace levels of contaminants as fill, dated November 18, 1994.

3.9 Jackson, C. S. (1995), letter to Vincent Chrisitian, California Regional Quality Control Board, San Francisco Bay Region (2), regarding beneficial reuse of soils containing metals slightly exceeding background values, dated July 24, 1995.

3.10 Marshack, J. B. (1989), *The Designated Level Methodology for Waste Classification and Cleanup Determination*, California Regional Water Quality Control Board—Central Valley Region.

3.11 409.9 SJCAPCD, San Joaquin County Air Pollution Control District (1988), *RULE 409.9 Volatile Organic Compound Emissions from Decontamination of Soil* (Adopted Nov. 29, 1988, Effective July 1, 1989).

3.12 State of California Leaking Underground Fuel Tank Task Force (1988), *Leaking Underground Fuel Tank (LUFT) Field Manual.*

3.13 Title 22, California Code of Regulations, Chapter 11, Section 66261.24 (Register 95, No. 42; 10-20-95) and Appendix 11 (Register 95, No. 21; 5-26-95).

3.14 Title 22, California Code of Regulations, Chapter 18, Section 66268.40 (Register 95, Nos. 7-8; 2-24-95) and (Register 92, Nos. 15-17; 4-24-92).

3.15 U.S. Environmental Protection Agency (EPA) (1991), *Guide to Management of Investigation-Derived Wastes*, U.S. EPA, Office of Solid Waste and Emergency Response, Publication 9345.3-03FS, October 1991.

4.0 DEFINITIONS

See SOP Glossary.

5.0 RESPONSIBILITIES

5.1 Division Leader

The Division Leader's responsibility is to ensure that all activities performed by ERD at the Livermore Site and Site 300 are performed safely and comply with all pertinent regulations and procedures, and provide the necessary equipment and resources to accomplish the tasks described in this procedure.

5.2 Hydrogeologic Group Leader (HGL)

The HGL's responsibility is to ensure that proper procedures are followed for activities (i.e., drilling, borehole logging and sampling, monitor well installations and development) and to oversee the disposal of all investigation derived wastes.

5.3 Drilling Supervisor (DS)

The DS schedules all drilling related activities and coordinates the drilling contractor schedules and equipment needs.

5.4 Drilling Coordinator (DC)

The DC provides the interface between the DS and the field activities and is responsible for estimate the contaminants likely to be present, and the quantity of drilling spoils that may be generated.

5.5 Drilling Geologist (DG)

The DG is responsible for disposing investigation derived waste properly per the requirements of this SOP.

5.6 Engineering Group

The Engineering Group is responsible for determining a disposal area.

5.7 Task Leader (TL)

The TL are responsible for the overall investigation, planning, assessment, and remediation within a study area.

6.0 PROCEDURE

6.1 Discussion

6.1.1 According to available guidance (Reference 3.15), the EPA expects soil IDW to be returned to the source if short-term protectiveness of human health and the environment is not an issue. Therefore, in the long term, the IDWs that could pose a risk to human health and the environment will be addressed by the final action. Unfortunately, it is often impossible to return drill cuttings and cores back to the borehole when the borehole is completed as a well. Thus, a review of ARARs was conducted to determine the best disposal methods for such IDW. Also, State law allows Regional Boards to waive waste discharge requirements (WDRs) for a specific discharge or types of discharges where it is not against the public interest [California Regional Water Quality Control Board (RWQCB) 1992]. As listed in Table IV-1 of the Central Valley Region Basin Plan, drilling mud is one type of discharge which has a WDR waiver. The specific procedures related to drilling mud are discussed later in this SOP.

6.1.2 Attachment A lists ARARs that may be applicable to drill cuttings, core samples, and drilling mud. Attachment A also describes actions taken to comply with substantive portions of each regulation, as required by EPA, 1991. As a result of our review of these ARARs, we feel the best management practices are observed when drill cuttings are disposed of in the immediate vicinity of the drilling activity. However, due to programmatic constraints at the Livermore Site, it is often not possible to dispose of drill cuttings in the vicinity of the boreholes. Therefore, drill cuttings are disposed of at the designated Drilling Cuttings/Laydown Area on site.

6.1.3 Chemical analyses on drilling wastes are usually performed in areas of known or suspected contamination or in previously unexplored areas. Drilling wastes from areas with an extensive historical record of sampling and chemical analyses that detected no chemical contamination are generally not chemically analyzed.

6.1.4 The disposal criteria in this procedure were developed to ensure that no wastes, which are above the Resource Conservation and Recovery Act (RCRA) hazardous waste levels, or waste with specified levels (described below) of HE or radioactive contaminants are disposed of on the ground surface near the borehole. When necessary, LLNL Hazardous Waste Management Division (HWM) will dispose of investigation-derived hazardous wastes.

6.2 Preparation

6.2.1 Estimate contaminants, concentrations, and quantity of waste for planning the proper disposal method for the IDW, excavation of the proper size mud pit (when applicable), and mud transportation capacity (when applicable).

6.2.2 Determine location for placement of drill cuttings or installation of pit to contain drilling mud. For Site 300, when drilling off site, haul drilling spoils to a designated area on site determined by the Site 300 Environmental Analyst (EA) and Site Manager. Drill cuttings and mud pit should not be visible from a road. If drilling is performed on a hill, ensure that no stream of water or drilling mud will flow down the hillside. If drill cuttings or mud cannot be hidden from view due to the proposed drilling location, consult the DC, EA, Engineering Group, and Site Manager. At the Livermore Site, contact the Engineering Group to determine disposal locations. Usually, drilling spoils will be disposed of at the Drill Cuttings/Laydown Area.

6.2.3 Construct mud pit (as determined by 6.2.2):

A. Scrape off the top 1 to 2 ft of soil and save for restoration phase.

B. Install an animal escape ramp into pit as soon as it is excavated. The ramp should be repositioned each evening to ensure an adequate escape route. Place a barrier around the pit to prevent any animals or people from inadvertently walking into the pit.

6.2.4 Perform the applicable preparation activities described in SOP 4.1, “Instructions for Field personnel” (i.e., calibrate field equipment, don PPE).

6.3 Drilling Waste Containment

6.3.1 Air-mist or Mud-rotary Drilling (Site 300 On-site). Place drilling waste in the approved mud pit location.

6.3.2 Air-mist or Mud-rotary Drilling (Livermore Site On and Off-site and Site 300 Off-site). Place all drilling waste in a container(s) for transport to disposal area.

6.3.3 Auger Drilling (Livermore Site and Site 300 On-site). Place drill cuttings on plastic sheeting placed on the ground or in containers until transport to disposal area.

6.3.4 Auger Drilling (Livermore Site and Site 300 Off-site). Place all drilling waste in a container(s) for transport to disposal area.

6.3.5 If contaminant type(s) or concentrations are suspected or determined in drilling spoils to be hazardous, the drilling wastes should be segregated by depth to isolate the spoils from the contaminated zones. These spoils should be placed on plastic or in hazardous waste drums.

6.4 Screening of Drilling Waste

6.4.1 Screen core samples or cuttings using a photoionization detector (PID) or flame ionization detector (FID) meter approximately every 5 ft of drilling, or at a

reduced permeability interface where there is a likelihood of contaminant accumulation (volatile compounds only).

6.4.2 For mud-rotary drilling techniques, collect aliquots of drilling mud from the mud tank or trailer for field PID or FID meter screening prior to disposal. Screen each load of the mud separately (volatile compounds only).

6.4.3 If VOC contamination of the drilling spoils is encountered (10 $ppm_{v/v}$), segregate the spoils from the previously clean spoils, and increase the frequency of screening as directed by the DG. Collect samples of the spoils and submit for laboratory analysis.

6.4.4 Screening Method for VOCs using an PID or FID:

1. Collect enough drilling waste (drilling mud or cuttings) to fill two 40 ml vials (or equivalent containers).

2. Immediately empty the two vials into a new, clean plastic bag. Capture approximately 1 liter of air in the bag before sealing. Shake the bag well. Then place the bag on a stationary surface (in the sun, if possible) to allow the headspace to come into equilibrium with the waste. The length of time the headspace is allowed to equilibrate will depend on ambient temperature and humidity conditions; 2 minutes if temperature is >90° F, at least 5 minutes if >70° F, 10 minutes if 70° to 50° F, and 15 minutes if <50° F. In extremely hot conditions, if the bag is allowed to sit too long, a buildup of water vapor in the bag may affect a PIDs performance. An FID should not have any negative effects from water vapor.

3. Insert the tip of the PID or FID probe into the headspace of the plastic bag by piercing it with the probe. Avoid making contact with mud, soil, or water with the instrument tip to prevent these materials from being sucked into the instrument.

4. Read the meters' display to obtain a total VOC concentration of the headspace in parts per million on a volume to volume basis ($ppm_{v/v}$).

5. Record this reading on the borehole well construction form, and refer to the criteria below for disposal.

6.4.5 When radiological contamination is suspected, notify the Environmental Safety and Health [ES&H] Team 1 (Site 300) or Team 4 (Livermore Site) prior to drilling. Survey the drill cuttings as directed by Team 1 or Team 4. When the screening method detects activity two times the background level, collect samples for laboratory analysis per the TL. Tritium should be analyzed by either LLNL Environmental Sciences or a contract analytical laboratory using the "Soil Water Distillation" technique (detection limit is between 200 to 1,000 pCi/L or 0.02 to 0.1 picocuries per gram [pCi/g] at 10% moisture) or the "Beta Scan" technique (detection limit is approximately 10,000 pCi/L or 1.0 pCi/g at 10% moisture). Provide the analytical results from the samples taken when the screening method detected activity twice the background level, to the LLNL HWM Division and the appropriate EA to determine the appropriate method of waste disposal.

6.5 Disposal of Drilling Waste

The following disposal procedures are to be used only when there is sufficient historical data that delineates contaminants and their concentrations. If no historical data is available, a variety of analyses, as determined by the TL should be performed first to ensure that all potential contaminants in the wastes are understood for proper disposal.

6.5.1 Disposal procedure for waste containing VOCs:

TCE is the predominant purgeable halocarbon contaminant at Site 300 and the Livermore Site. The U.S. EPA Toxic Concentration Leachate Procedure (TCLP) maximum contaminant concentration of 0.5 mg/L in the resulting extract has been selected for our disposal criteria. Using the TCLP, soluble constituents in a soil sample are extracted using a 20:1 dilution (by weight). In order to insure that the extract concentration of TCE does not exceed 0.5 mg/L, a value of 10 mg/kg is the disposal criteria above which the soil will be dealt with in a manner to ensure maximum environmental protection as described below.

A. Drilling waste <10 mg/kg total VOCs:

Dispose of drill cuttings (1) at the ground surface near the well site, (2) as fill, or (3) in the designated disposal area. If cuttings are disposed of near the well site, spread cuttings out as much as is practical. When appropriate, discharge drilling mud to a pit or sump with a minimum of 2 ft of freeboard (Site 300) or 1 ft of freeboard (Livermore Site). For off-site drilling activities, transport drill cuttings and mud on site for disposal in the designated disposal area.

B. Drilling waste >10 mg/kg total VOCs:

Place drill cuttings temporarily on plastic sheeting at well site or Corp. Yard in a 6-in. lift to promote aeration and reduce VOC concentrations. Discharge drilling mud directly to drums, or leave temporarily in mud tank or trailer. After drilling completion, re-evaluate the spoils VOC concentration. If concentrations remain above 10 mg/kg, dispose of the waste appropriately as determined by HWM, in consultation with the appropriate EA.

6.5.2 Disposal procedure for waste containing total petroleum hydrocarbons (TPH), gasoline or diesel product:

The Leaking Underground Fuel Tank (LUFT), Field Manual (3.12) sets a TPH concentration of 1,000 mg/kg in soil as a hazardous waste classification criterion and suggests that a lower value may be necessary on a case-by-case basis. The Bay Area Air Quality Management District (BAAQMD), San Joaquin County Air Pollution Control District (SJCAPCD), and Alameda County define TPH-contaminated soil as a soil that exhibits 50 mg/kg by weight TPH, but they exempt soil that is removed for sampling purposes (409.9 SJCAPCD; and 8-40-112 and 8-40-205 BAAQMD).

A. Drilling waste <100 mg/kg TPH (equivalent to 10,000 $ppm_{v/v}$ on the OVM):

Dispose of drill cuttings (1) at the ground surface near the well site, (2) as fill, or (3) in the designated disposal area. If cuttings are disposed of near the

well site, spread cuttings out as much as is practical. When appropriate, discharge drilling mud to a pit or sump with a minimum of 2 ft of freeboard (Site 300) or 1 ft of freeboard (Livermore Site). For off-site drilling activities, transport drill cuttings and mud on site for disposal in the designated disposal area.

B. Drilling waste >100 mg/kg TPH:

Store drilling waste on site covered with plastic sheeting or in drums until a determination on the feasibility of enhanced soil bioremediation (ESB) is made by the TL. If ESB is to be used, transport the waste to the ESB site and follow steps below. If ESB is not feasible, treat and/or dispose of the waste appropriately as determined by HWM, in consultation with the appropriate EA.

l. Spread soil to a thickness of 6 to 12 inches.

2. Water weekly and biweekly.

3. Till soil and fertilize as necessary

Note: Details on the ESB can be found in Reference 3.4.

6.5.3 Disposal procedure for waste containing metals:

A. Drilling waste below Soluble Threshold Limit Concentrations (STLCs):

Dispose of drill cuttings (1) at the ground surface near the well site, (2) as fill, or (3) in the designated disposal area. If cuttings are disposed of near the well site, spread cuttings out as much as is practical. When appropriate, discharge drilling mud to a pit or sump with a minimum of 2 ft of freeboard (Site 300) or 1 ft of freeboard (Livermore Site). For off-site drilling activities, transport drill cuttings and mud on site for disposal in the designated disposal area.

B. Drilling waste above STLCs:

Dispose off site as hazardous waste through HWM.

6.5.4 Disposal procedure for waste containing tritium:

At present, no Federal or State hazardous waste guidelines exist for tritium in soil. The most pertinent guideline is the classification threshold for tritium concentration as a Class A solid waste at 40.0 curies per cubic meter (10 CFR, Section 61.55). This value is approximately equivalent to 40,000 microcuries per liter (mCi/L) or 40,000,000,000 picocuries per liter (pCi/L).

A. Drilling waste below “Beta Scan” Practical Quantitation Limit (PQL); 1 pCi/g or a Lab counting of <5 pCi/g:

Dispose of drill cuttings (1) at the ground surface near the well site, (2) as fill, or (3) in the designated disposal area. If cuttings are disposed of near the well site, spread cuttings out as much as is practical. When appropriate, discharge drilling mud to a pit or sump with a minimum of 2 ft of freeboard

(Site 300) or 1 ft of freeboard (Livermore Site). For off-site drilling activities, transport drill cuttings and mud on site for disposal in the designated disposal area.

B. Drilling waste above "Beta Scan" PQL or a Lab counting of >5 and <60 pCi/g:

If tritium contamination is known or expected to be encountered within a particular zone, segregate the spoils to minimize the quantity of spoils and dispose of as determined by HWM, in consultation with the appropriate EA.

C. Drilling waste results >60 pCi/g:

Dispose of mud or cuttings as radioactive waste determined on a case-by-case basis by the ECBGL in consultation with HWM and the appropriate EA, in accordance with applicable ARARs.

6.5.5 Disposal procedure for waste containing other radionuclides:

A. Drilling mud and cuttings are considered to have no LLNL-added radioactivity if the alpha activity is <15 pCi/g soil and the beta activity is <25 pCi/g:

Dispose of drill cuttings (1) at the ground surface near the well site, (2) as fill, or (3) in the designated disposal area. If cuttings are disposed of near the well site, spread cuttings out as much as is practical. When appropriate, discharge drilling mud to a pit or sump with a minimum of 2 ft of freeboard (Site 300) or 1 ft of freeboard (Livermore Site). For off-site drilling activities, transport drill cuttings and mud on site for disposal in the designated disposal area.

B. Drilling waste are considered to have rad added if the alpha activity is >5 pCi/g soil and the beta activity is >25 pCi/g:

Dispose of IDW as determined by HWM, in consultation with the appropriate EA.

6.5.6 Disposal procedure for waste containing high explosives (HE):

There are no Federal or State criteria for establishing hazardous concentrations of HE compounds in soil. However, using the *Designated Level Methodology for Waste Classification and Cleanup Determination* (Marshack, 1989), LLNL Site 300 has established Designated Levels (DLs) for Cyclotetramethylene-Tetranitramine (HMX) and Cyclotrimethylene-Trinitramine (RDX). The DLs are the concentrations above which a soil may result in degradation of underlying ground water quality. The disposal criteria used are based upon a toxicological literature review presented in Reference 3.5.

A. Drilling waste <31.5 ppm RDX and <315.0 ppm HMX:

Dispose of mud, cuttings, and unused core samples on ground surface at well site.

B. Drilling waste >31.5 ppm RDX and/or >315.0 ppm HMX:

Treat or dispose of waste appropriately as determined by HWM and the appropriate EA.

6.5.7 Disposal procedure for waste containing other detectable contaminants or multiple contaminants:

Dispose of IDW as determined by HWM, in consultation with the appropriate EA.

6.6 Site Restoration

6.6.1 As soon as drilling and, if applicable, well installation has been completed, restore the area to predrilling conditions.

6.6.2 Till drill cuttings and unused soil core left at the well site with the native topsoil so that the nutrients and seed bank within the topsoil is introduced to the cuttings.

6.6.3 Leave a minimum of 2 ft of freeboard in the pit after depositing the drilling mud. The pit should be filled as soon as possible to minimize the amount of time the excavation is open.

6.6.4 Allow a sufficient amount of time for the drilling mud to solidify (one to many months), depending on the season and amount of precipitation.

6.6.5 After drilling mud has solidified, cover the hardened mud with the topsoil that was removed prior to excavation. The site should return to predrilling appearance after the vegetation has been re-established.

6.7 Procedure Exceptions

In developing this SOP, every effort was made to ensure compliance with all ARARs, as required in EPA, 1991. But as recognized in EPA, 1991, it is often necessary to use the best professional judgment, in light of site-specific conditions. Any deviations from this procedure must be approved by the Division Leader or designee only after it is determined that such actions are still protective of human health and the environment.

7.0 QUALITY ASSURANCE RECORDS

7.1 Borehole/Well Construction Log

7.2 Document Control Logbook

8.0 ATTACHMENT

Attachment A— Livermore Site and Site 300 ARARs

Attachment A

Potential Federal, State, and Local ARARs Table

Attachment A. Potential Federal, State, and local ARARs.

ARAR	Comments	LLNL actions taken to comply with ARARs
Federal		
1. Clean Air Act (CAA) [42 USCA 7401–7642] [40 CFR 50–69]	National primary and secondary ambient air quality standards (NAAQS) are defined under Section 109 of the CAA and are listed in 40 CFR 50.	Soils do not contain contaminants regulated under NAAQS.
2. Clean Air Act [42 USCA 7412] [40 CFR 61.92]	National Emission Standards for Hazardous Air Pollutants (NESHAPs) are specific to industrial emissions. 40 CFR 61.92 limits emissions of radionuclides to those amounts that would cause any member of the public to receive, in any one year, a maximum effective dose equivalent of 10 millirems per year (mrem/y).	Aeration of tritiated soils does not exceed dose limits.
3. Land Disposal Restrictions (LDRs) RCRA [40 CFR 268]	Any waste placed in land-disposal units must comply with LDRs by either attaining specific performance or technology-based standards.	Aeration of contaminated soils near boring in area of contamination is not considered "placement" under LDR restrictions, and is consistent with final site remedy.
State		
4. Hazardous Waste Control Act (Health and Safety Code, Section 25100– 25395), CCR, Title 22, ch. 30: Minimum Standards for Management of Hazardous and Extremely Hazardous Wastes	HCWA controls hazardous wastes from their point of generation through accumulation, transportation, treatment, storage, and ultimate disposal. All potentially hazardous materials are handled in accordance with standard chain-of-custody procedures. These requirements are, therefore, applicable to all treatment alternatives.	All soil, other than VOC-containing soil, determined to be hazardous waste will be submitted to LLNL's Hazardous Waste Management Division for proper disposal following all applicable regulations. VOC-contaminated soil will be aerated in area of contamination.
Criteria for Identifying Hazardous Wastes [Title 22, ch. 30, 66693–66776]	Tests for identifying hazardous characteristics are set forth in these regulations.	All soil, other than VOC-containing soil, determined to be hazardous waste will be submitted to LLNL's Hazardous Waste Management Division for proper disposal following all applicable regulations. VOC-contaminated soil <10 ppm will be aerated in area of contamination.

Attachment 1. (Continued)

ARAR	Comments	LLNL actions taken to comply with ARARs
Persistent and Bioaccumulative Toxic Substances [Title 22, ch. 30, 66699]	Total Threshold Limit Concentrations (TTLCs) and Soluble Threshold Limit Concentrations (STLCs) have been established for selected toxics to be used in establishing whether waste is hazardous. If a chemical is either listed or tested and found hazardous, then remedial actions must comply with the hazardous waste requirements under Title 22.	All soil, other than VOC-containing soil, determined to be hazardous waste will be submitted to LLNL's Hazardous Waste Management Division for proper disposal following all applicable regulations. VOC-contaminated soil <10 ppm will be aerated in area of contamination.
5. Porter-Cologne Water Quality Control Act [WC13000–13806], as administered by the State Water Resources Control Board (SWRCB) and the Regional Water Quality Control Board (RWQCB) under CCR Title 23, subch. 15, 1050–2836.	Establishes authority for State and Regional Water Boards to determine site-specific discharge requirements and to regulate disposal of waste to land.	Aeration of contaminated soils comply with substantive sections of these regulations due to low volume of contaminants.
6. Fish and Game Regulations on Pollution	Prohibits water pollution with any substance or material deleterious to fish, plant, or bird life.	Aeration of contaminated soils in area of contamination will not result in water pollution deleterious to biota.
7. Air Resources Act (Health and Safety Code, section 3900 et. seq.)	Establishes allowable discharge standards for point sources within each air pollution control district, and establishes ambient air quality standards.	Aeration of contaminated soils comply with substantive sections of these regulations due to low volume of contaminants.
8. Bay Area Air Quality Management District (8-40-112; 8-40-205) San Joaquin County Air Pollution Control District (409.9)	Requires permitting of VOC air discharges (e.g., from an air-stripping unit).	Soil that is removed for sampling purposes is exempt.
9. Central Valley Regional Water Quality Control Board Designated Level Methodology	Provides guidance in establishing acceptable levels of soil contamination which will not impact ground or surface waters.	Methodology used to establish RDX and HMX designated levels.

LLNL Environmental Restoration Division (ERD)
Standard Operating Procedure (SOP)

ERD SOP 1.9: Suction Lysimeter Soil Moisture Sampling—Revision: 5

AUTHOR(S):
E. Walter

APPROVALS:	Date
Jesse Yow Division Leader	8/30/06
Ed Folan Engineering and Operations Group	5-9-06

CONCURRENCE:	Date
Rebecca Goodrich QA Implementation Coordinator	8/3/06

1.0 PURPOSE

The purpose of this SOP is to define suction lysimeter soil moisture sampling procedures that will ensure collection of a representative soil moisture sample from the vadose zone.

2.0 APPLICABILITY

This procedure applies to the collection of soil moisture samples for analysis. Soil moisture samples are generally used as an aid in tracking the migration of contaminated inorganic constituents through the vadose zone to the water table. The only chemical constituent for which suction lysimeters are currently being sampled is tritium at Site 300. Because of the use of pressurized air for sample retrieval, the use of suction lysimeters is not appropriate for the collection of volatile organic compound (VOC) samples. ERD work activities are conducted within the framework of the institutional Integrated Safety Management System (ISMS). The Environmental Management System (EMS) is a component of the ISMS, which is also supported during the planning, performing, and evaluation of the work processes.

3.0 REFERENCES

3.1 deVera, E. R., Simmons, B. P., Stephen, N. D., and Storm, D. L. (n.d.), *Samplers and Sampling Procedures for Hazardous Waste Streams,* U.S. Environmental Protection Agency Report EPA-600/2-80-018.

3.2 Ford, P. J., Tarina, P. J. and Seely, D. E. (1984), *Characterization of Hazardous Waste Sites A Methods Manual, 302. Vol. II of Available Sampling Methods*, 2nd ed., U.S. Environmental Protection Agency, EPA 600/4-84/076.

3.3 Korte, N. and Ealey, D. (1983), *Procedures for Field Chemical Analyses of Water Samples*, U.S. Department of Energy, GJ/TMC-07, Technical Measurements Center, Grand Junction Project Office.

3.4 Korte, N. and Kearl (1985), *Procedures for the Collection and Preservation of Groundwater and Surface Water Samples and for the Installation of Monitoring Wells: Second Edition*, U.S. Department of Energy, GJ/TMC-08, Technical Measurements Center, Grand Junction Projects Office.

3.5 *National Handbook of Recommended Methods for Water-Data Acquisition* (n.d.), U.S. Department of the Interior.

3.6 National Council of the Paper Industry for Air and Stream Improvement, Inc. (1982), *A Guide to Groundwater Sampling,* National Council for the Paper Industry Technical Bulletin No. 362.

3.7 U.S. Environmental Protection Agency (USEPA) (1983), *Methods for Chemical Analysis of Water and Wastes*, EPA-600/4-79-020, Washington, DC.

3.8 USEPA (1985), *Practical Guide for Groundwater Sampling*. EPA/600/2-85/104.

3.9 USEPA (1986), *RCRA Groundwater Monitoring Technical Enforcement Guidance Document,* OSWER-9950.1.

3.10 USEPA (1986), *Test Methods for Evaluation of Solid Waste*, EPA-SW-846, Third Edition, Washington, DC.

3.11 USEPA (1992), *RCRA Groundwater Monitoring: Draft Technical Guidance*, Washington, D.C. (EPA/530-R-93-001).

4.0 DEFINITIONS

See SOP Glossary.

5.0 RESPONSIBILITIES

5.1 Division Leader (DL)

The DL's responsibility is to ensure that all activities performed by ERD at the Livermore Site and Site 300 are performed safely and comply with all pertinent regulations and procedures, and provide the necessary equipment and resources to accomplish the tasks described in this procedure.

5.2 Project Leader (PL)

The PL's responsibility is to ensure that all activities are performed safely and comply with all pertinent regulations and procedures, work is authorized through an Integration Work Sheet (IWS), and there is sufficient funding to initiate the work.

5.3 Engineering and Operations Group Leader (EOGL)

The EOGL's responsibility is to ensure that proper procedures are followed for activities (e.g., construction, activation, facility operation and sampling).

5.4 Site Safety Officer (SSO)

The SSO's responsibility is to ensure that fieldwork is conducted safely and in compliance with applicable IWSs', Site Safety Plans, SOPs, and any other applicable safety related documentation.

5.5 Field Personnel (FP)

The FP are responsible for properly performing lysimeter sampling in compliance with all applicable regulations and procedures including IWS(s) to ensure that the samples and resulting data are representative of the actual conditions.

5.6 Sampling Coordinator (SC)

The SC's responsibilities are to ensure that the field personnel have been properly trained, they comply with all applicable regulations and procedures, and generate all applicable field sheets.

6.0 PROCEDURES

6.1 Preparation

6.1.1 Prior to conducting work, perform the applicable preparation activities described in SOP 4.1, "General Instructions for Field Personnel". Personnel who are new to the LLNL project will receive direct field supervision and on-the-job training (OJT) from a Subject Matter Expert (SME) for at least the first 24 hours of field activity using the ERD Field Investigation Orientation Lesson Plan (course number EP7033-05).

6.1.2 Check the following equipment for proper operation:

A. Air/vacuum pumps.

B. Vacuum and pressure gauges.

C. Gasoline-driven generator to be used with the vacuum pump. Wear gloves at all times when handling a generator, and dispose of gloves immediately after use.

6.1.3 Obtain equipment and supplies as listed in Attachment A, and load into the field sampling vehicle.

6.1.4 Locate lysimeters to be sampled, and choose the most efficient sampling order, e.g., sample from lowest contaminated area to most contaminated area.

6.1.5 Fill out initial information in Document Control Logbook per instructions in SOP 4.2, "Sample Control and Documentation."

6.2. Safety Considerations

6.2.1 The procedures described in the following sections will be conducted in accordance with LLNL IWS 11342 "Routine Groundwater Sampling and Water Level Monitoring" at Site 300.

6.3 Lysimeter Sampling Procedure

6.3.1. Unlock the steel protective casing, and remove any dirt or debris from the gas-line fitting with a clean disposable towel.

6.3.2. Inspect the dedicated sample line for damage, and replace if necessary.

6.3.3. Attach a vacuum gauge (measuring centibars of soil suction) to the male quick-disconnect fitting attached to the lysimeter sanitary seal (Attachment B).

6.3.4. Connect the lysimeter's dedicated sample line to the vacuum port on the pump.

6.3.5. Plug the vacuum pump into the generator, and pull-start the generator (with the breaker switch off).

6.3.6. Open the air-intake valve on the pump, and turn the generator breaker switch on.

6.3.7. Slowly open the valve on the vacuum port in order to create a vacuum of 60 to 70 centibars. (This is generally sufficient to pull moisture from the surrounding soil material.) Watch the vacuum gauge closely so that the valve can be closed at the appropriate vacuum level. A vacuum release valve is attached to the vacuum port to prevent implosion of the lysimeter.

6.3.8. When the required vacuum is reached, close both the influent and effluent valves on the lysimeter. Turn off both the vacuum pump and the generator. The vacuum gauge may then be removed from the fitting on the sanitary seal.

6.3.9. Record all information on the Field Lysimeter Sampling Log (Attachment C), including the evacuation date and the vacuum level.

6.3.10. Do not disturb the suction lysimeter for 48 hours (h) to allow the moisture to be extracted from the soil pores.

6.3.11. After 48 h, attach the vacuum gauge to the male quick-disconnect fitting on the seal. Open the valve, and measure the residual vacuum. Record this value and the sample date on the lysimeter log. Remove the gauge, and open the other valve.

6.3.12. If unforeseen circumstances arise and the vacuum on the suction lysimeter must remain past the 48 h, it is acceptable to proceed with sampling. However, if the lysimeter does not yield an appreciable amount of water for analysis or it is dry and past history indicates that this should not be the case, a vacuum must be re-applied and the suction lysimeter must remain undisturbed for an additional 48 h before another sample can be drawn.

6.3.13. Attach an air line from the pressure side of the pump to the male quick-disconnect fitting.

6.3.14. Turn on the generator and pump, and open the pressure valve on the pump forcing a small amount of air pressure (30 to 40 PSI) into the lysimeter chamber.

6.3.15. Any water in the lysimeter is forced to the surface and is collected from the dedicated sample line into the appropriate container as specified by the SC. Any excess water is collected in a beaker or graduated cylinder so that total discharge volume can be determined. Record the residual vacuum, sample volume, excess volume, date and the technician's initials on the lysimeter field data sheet. Record all pertinent information (such as ID, date, volume, analysis, field and equipment conditions) in the Document Control Logbook.

6.3.16. Label samples per SOP 4.2, "Sample Control and Documentation" and SOP 4.4, "Guide to the Handling, Packaging, and Shipping of Samples."

6.4 Post Operation

6.4.1 Perform post-operation activities described in SOP 4.1, "General Instructions for Field Personnel," including decontamination of equipment according to SOP 4.5 "General Equipment Decontamination."

6.4.2 Conduct a cross-check of sample bottles in possession with those recorded in the logbook before leaving the sampling site and complete the chain-of-custody per SOP 4.2, "Sample Control and Documentation."

6.4.3 Arrange for delivery of samples. Specifics on sample shipment can be found in SOP 4.4, "Guide to the Handling, Packaging, and Shipping of Samples." Deliver or ship samples to the appropriate laboratory as soon as possible after collection.

6.4.4 Deliver all field logbook notes, field forms, and copies or originals of chain-of-custody forms to the Data Management Team.

7.0 QUALITY ASSURANCE RECORDS

7.1 Document Control Logbook

7.2 Chain-of-Custody Forms

7.3 Field Lysimeter Sampling Log

8.0 ATTACHMENTS

Attachment A—Equipment Checklist

Attachment B—Suction Lysimeter Surface Hardware and Schematic

Attachment C—Field Lysimeter Sampling Log

Attachment A

Equipment Checklist

EQUIPMENT CHECKLIST

____ Generator
____ Two-way radio
____ Thomas electric air pump/vacuum pump
____ Vacuum gauges
____ Beaker/graduated cylinder
____ Tool kit
____ Sample labels
____ Sample containers
____ Ice chests and ice
____ Ziploc-type bags
____ Padding for packaging of samples
____ Extra fittings and sample lines
____ Trash bags
____ Document control logbook
____ Vinyl gloves
____ Disposable towels
____ Any additional field supplies per SOP 4.1, “General Instructions for Field Personnel”
____ Extension cord
____ Snake chaps (Spring–Summer)
____ Field Data Sheets
____ Appropriate maps

Attachment B

Suction Lysimeter Surface Hardware and Schematic

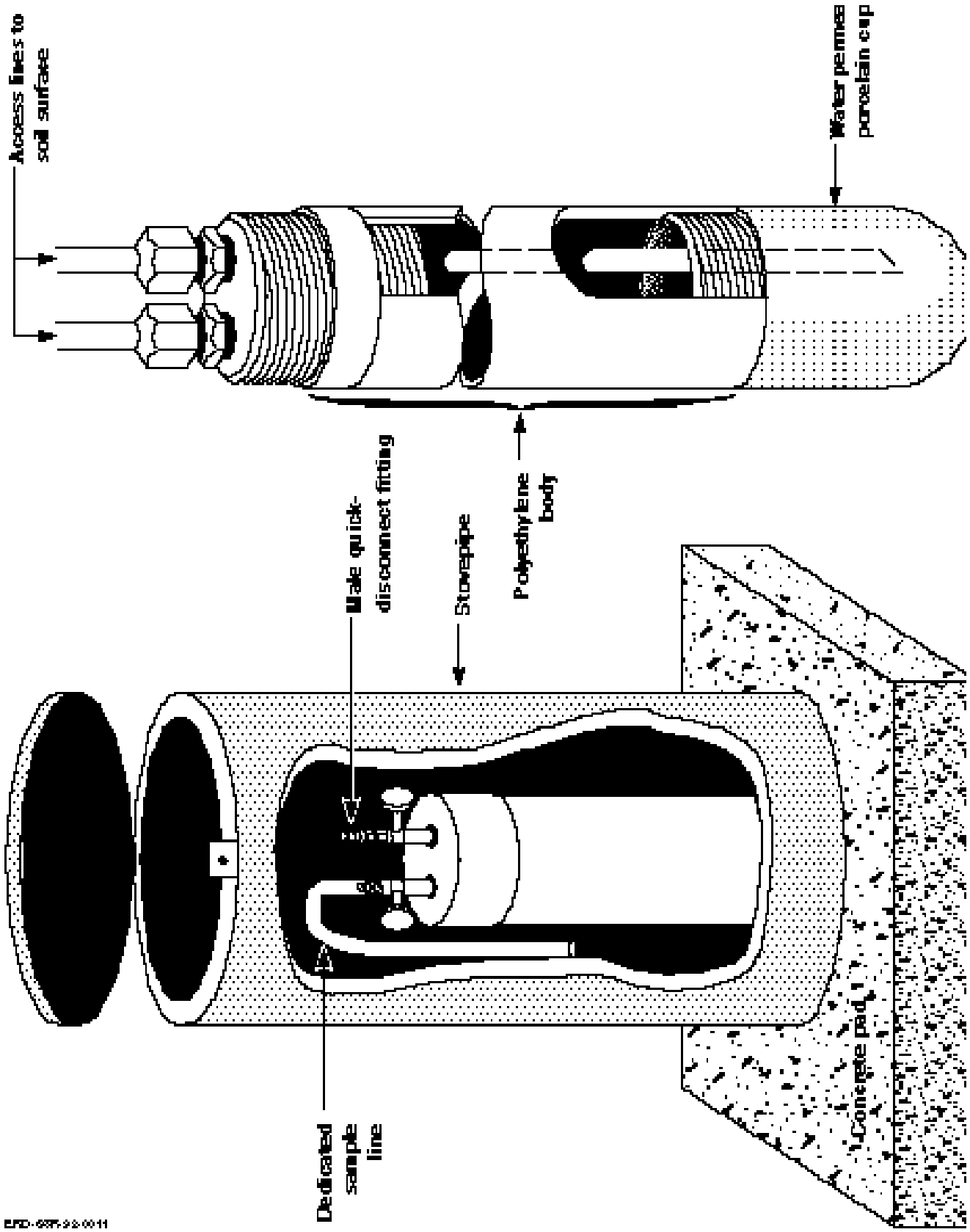
Access lines to soil surface
Water permeable porcelain cup
Male quick-disconnect fitting
Stovepipe
Polyethylene body
Dedicated sample line
Concrete pad
ERD-SOP-1.9-0011

Attachment C

Field Lysimeter Sampling Log

LYSIMETER DATA

LYSIM. NUMBER	DATE EVAC	VAC LVL	SAMPLE DATE	RES. VAC.	SAMPLE VOL.	EXCESS VOL.	INIT.
K1-03A							
05A							
K7-08A							
NC2-02							
03							
04							
NC7-01							
02							
03							
04							
05A							
06							
07							
08							
09							
13							
32A							
32B							
39A							
39B							
42A							
42B							

LLNL Environmental Restoration Division (ERD)
Standard Operating Procedure (SOP)

ERD SOP 1.10: Soil Vapor Surveys—Revision: 5

AUTHOR(S):
S. Gregory and J. Karachewski*

ENVIRONMENTAL RESTORATION DIVISION
CONTROLLED COPY
#
THIS IS A RED STAMP
ERD

APPROVALS:	Date
Jesse Gow **Division Leader**	8/30/06
Hydrogeology & Decision Support Group Leader	8/10/06

CONCURRENCE:	Date
Rebecca Goodrich **QA Implementation Coordinator**	8/10/06

*Weiss Associates

1.0 PURPOSE

This procedure describes collection of representative samples and accurate analytical measurements of soil vapor from discrete subsurface depths.

2.0 APPLICABILITY

This procedure applies to *in situ* subsurface soil vapor sampling for volatile organic compounds (VOCs) present in the vadose zone. These procedures are applicable to soil vapor surveys conducted at the LLNL Livermore Site and Site 300. ERD work activities are conducted within the framework of the institutional Integrated Safety Management System (ISMS). The Environmental Management System (EMS) is a component of the ISMS, which is also supported during the planning, performing, and evaluation of the work processes.

3.0 REFERENCES

3.1 Devitt, D. A., Evans, R. B., Jury, W. A., Stark, T. A., Eklund, B. , Gnolson, A., and van Ee, J. J. (1987), "Soil Gas Sensing For Detection and Mapping of Volatile Organics," *National Water Well Association Publication*, Dublin, Ohio, 270 p.

3.2 Dresen, M. D., Nichols, E. M., Devany, R. O., Rice, D. W. Jr., Yukic, F. A., Howard, G., Cederwall, P., Qualheim, B., Lawson, R. S., and Isherwood, W. F. (1989), *LLNL Ground Water Project Monthly Progress Report*—January 1989, Lawrence Livermore National Laboratory, Livermore, Calif. (UCAR-10160-89-2).

3.3 Lamarre, A., Crow, N., Vonder Haar, S., McIlvride, W., Ferry, R., Pavletich, J., Caufield, R., Anderson, E., and Wade, M. (1989), "Trichloroethylene Contaminant Plume Definition at the Lawrence Livermore National Laboratory Site 300 General Services Area and Adjacent Ranches, Southeast Of Livermore, California," (Abstract) In Trans., American Geophysical Union Annual Meeting Held In San Francisco, 24 October 1989.

3.4 Silka, L. R. (1988), "Simulation of Vapor Transport Through the Unsaturated Zone–Interpretation of Soil-Gas Surveys," *Ground Water Monitoring Review*, pp. 115-123.

3.5 Vonder Haar, S., Pavletich, J., McIlvride, W., and Taffet, M. (1989), *Soil Vapor Survey at the LLNL Site 300 General Services Area, Adjacent Portions of the Connolly and Gallo Ranches, and the Site 300 Landfill Pit 6 Area*, Lawrence Livermore National Laboratory, Livermore, Calif. (UCRL-21183), 47 p. plus 1 appendix.

3.6 Vonder Haar, S., Ferry, R., and Lamarre, A. (1991), *Comparison of Two Soil-Vapor Survey Techniques and Their Relationship to TCE Concentrations in Underlying Ground Water at Lawrence Livermore National Laboratory Site 300*, Lawrence Livermore National Laboratory, Livermore, Calif. (UCRL-AR-107360), 67 p. plus 4 appendices.

4.0 DEFINITIONS

See SOP Glossary.

5.0 RESPONSIBILITIES

5.1 Division Leader (DL)

The DL's responsibility is to ensure that all activities are performed safely by ERD at the Livermore Site and Site 300 are performed safely and comply with all pertinent regulations and procedures, and provide the necessary equipment and resources to accomplish the tasks described in this procedure.

5.2 Project Leader (PL)

The PL's responsibility is to ensure that all activities are performed safely and comply with all pertinent regulations and procedures, work is authorized through an IWS, and there is sufficient funding to initiate the work.

5.3 Hydrogeology & Decision Support Group Leader (HDSGL)

The HDSGL's responsibility is to ensure that proper procedures are followed for activities (e.g., drilling, borehole logging and sampling, well installation and development).

5.4 Site Safety Officer (SSO)

The SSO's responsibility is to ensure that fieldwork is conducted safely and in compliance with applicable IWSs, Site Safety Plans, SOPs, and any other applicable safety related documentation.

5.5 Soil Vapor Survey (SVS) Project Coordinator

The SVS Project Coordinator is responsible for preparing the Sampling Plan, planning the logistics, and scheduling the utility line locators and technician support.

5.6 SVS Technician

The SVS technician is responsible for performing all necessary equipment maintenance, collecting samples according to this procedure and sampling plan, and documenting field-work.

6.0 PROCEDURES

6.1 Discussion

6.1.1 SVSs are used mainly as a screening tool to determine the concentration of volatile organic compounds (VOCs) in soil vapor as a result of volatilization from the soil and/or ground water. The primary SVS method currently used is the passive collection technique utilizing GORE-SORBER® modules.

6.1.2 The GORE-SORBER® passive soil-vapor technique provides a means to collect and detect trace quantities of a broad range of VOCs and semi-volatile organic compounds (SVOCs) near the ground surface (see Attachment A). The GORE-SORBER® module and methodology are described in detail in Attachment B. It is strongly recommended that site activities that disturb the natural equilibrium of vadose zone not be conducted during the time when the modules are in the subsurface. Such activities include: drilling (especially air-rotary), installation/operation of soil vapor extraction systems, construction or excavation, air sparging, etc.

6.2 Safety Considerations

6.2.1 To ensure safety to the workers and the environment, the procedures described in the following sections will be conducted in accordance with LLNL Integration Work Sheet (IWS) 12654 "Drilling in VOC and Mixed Waste-Contaminated Soils at the Livermore Site" and IWS 11578 "Drilling in VOC-Contaminated Soils at the Livermore Site". Drilling activities at Site 300 will be conducted in accordance with IWS 12684 "Site 300 Drilling Activity."

6.3 Office Preparation

6.3.1 Collect the equipment and materials needed to conduct the survey per Attachment C for GORE-SORBER®.

6.3.2 Acquire a map of sample locations from the SVS Project Coordinator. Obtain a logbook from the Document Control Officer per ERD SOP 4.2 "Sample Control and Documentation." The SVS Project Coordinator or designee reviews the existing vapor, soil, and ground water data and plots the locations of the contaminant plume(s), roads, buildings, utilities, etc. on a map to determine the grid pattern and line spacing for the sample points.

The SVS Project Coordinator selects the appropriate compound specific survey and required analyses from standard or custom lists.

6.3.3 Verify with the SVS Project Coordinator that the proposed soil vapor sample locations have been properly cleared by an underground line locator and that an approved "Site 200/300 Plant Engineering – Soil Excavation" permit has been received.

6.3.4 The SVS Project Coordinator will determine if blank and duplicate samples shall be collected at the start of the day, about half way through the day, and at the end of the day. This is in addition to the collection of proper QC samples as required by SOP 4.9: Collection of Field QC Samples.

6.3.5 Read and understand the site safety plan and any applicable Integration Work Sheets (IWSs). Obtain all required safety equipment.

6.3.6 Review all applicable SOPs with field personnel.

6.4 Field Preparation

Document all field and operation activities in the SVS field logbook and Daily Field Report.

Mark proposed sample locations on ground with stakes in undeveloped areas and with spray paint on pavement. Pre drill holes for larger projects to speed module installation.

Ensure proper storage of GORE-SORBER® Modules until deployment in the field. **DO NOT** store them near potential sources of organic vapors including petroleum fuels, fuel exhaust, solvents, paints, adhesives, foam insulating materials, etc.

Gather required tools and sampling supplies

- Slide hammer slam bar, or electric rotary drill to obtain a 1/2-inch to 1-inch diameter and a three foot deep pilot hole.
- Stainless steel insertion rod (supplied by W.L. Gore & Associates). Obtain extra rods for large projects.
- Corks with attached screw eyes (supplied by W.L. Gore & Associates).
- String cord to allow installation of module to desired depth (supplied by W.L. Gore & Associates).
- Chain of Custody and Installation/Retrieval Log forms (supplied by W.L. Gore & Associates).

6.5 Passive GORE-SORBER® SVS Operation

6.5.1 Module Installation

- Drive/drill a 1/2- to 1-inch diameter pilot hole to a depth of three feet below grade.
- Wearing surgical gloves, remove the GORE-SORBER® Module from the numbered container and re-seal the jar. Verify that the module ID number matches the ID number on the container.
- Follow GORE Procedure (Attachment B).
- When working in pavement, an “eye” screw can be screwed into the top of the cork to facilitate removal.
- DI water can be sprayed on a dry soil surface before the tile probe is used to help with installation.

Note: Modules can be hung above ground to sample ambient background air for QA concerns. Modules can also be hung in vadose zone wells to sample vapor in the well-bore.

6.5.2 Module Retrieval

The SVS Project Coordinator determines the module exposure period, which is usually 10 to 21 days. (Note: 21 days is preferred for TCE, DCE, PCE, and related VOCs)

- Refer to Typical Installation Diagram for Gore Sorber® (Attachment A).
- Holes can be grouted as needed, especially in pavement areas.

6.5.3 Documentation and Shipping

- Document field activities and provide original documentation/forms to the DMT.
- Complete "GORE-SORBER® Screening Survey Installation and Retrieval Log" form (Attachment D).
- Complete "GORE-SORBER® Screening Survey Chain of Custody " form (Attachment E).
- Obtain "University of California – Ship It" document from Technical Release Request (TRR) or designated representative.
- Submit samples to LLNL Shipping Department (Building 411 – Room 1608) for delivery using an overnight courier.

6.6 Post Operation

6.6.1 Decontaminate and store equipment properly per SOP 4.5, "General Equipment Decontamination".

6.6.2 Review logbooks and field forms for completeness and accuracy per SOP 4.2, "Sample Control and Documentation".

7.0 QUALITY ASSURANCE RECORDS

7.1 Final Analytical Data (either in μg/sorbant or $ppm_{v/v}$).
7.2 Field Logbooks
7.3 Daily Field Report
7.4 GORE-SORBER® Screening Survey Installation and Retrieval Log
7.5 Chain-of-Custody forms

8.0 ATTACHMENTS

Attachment A—Schematic of a Typical Installation Diagram for Gore Sorber®

Attachment B—Passive GORE-SORBER® Methodology for Module Storage, Installation, and Retrieval Including Figures

Attachment C—Equipment Checklist

Attachment D— GORE-SORBER® Screening Survey Installation and Retrieval Log

Attachment E— GORE-SORBER® Screening Survey Chain of Custody

Attachment A

Schematic of a Typical Gore Sorber® Installation

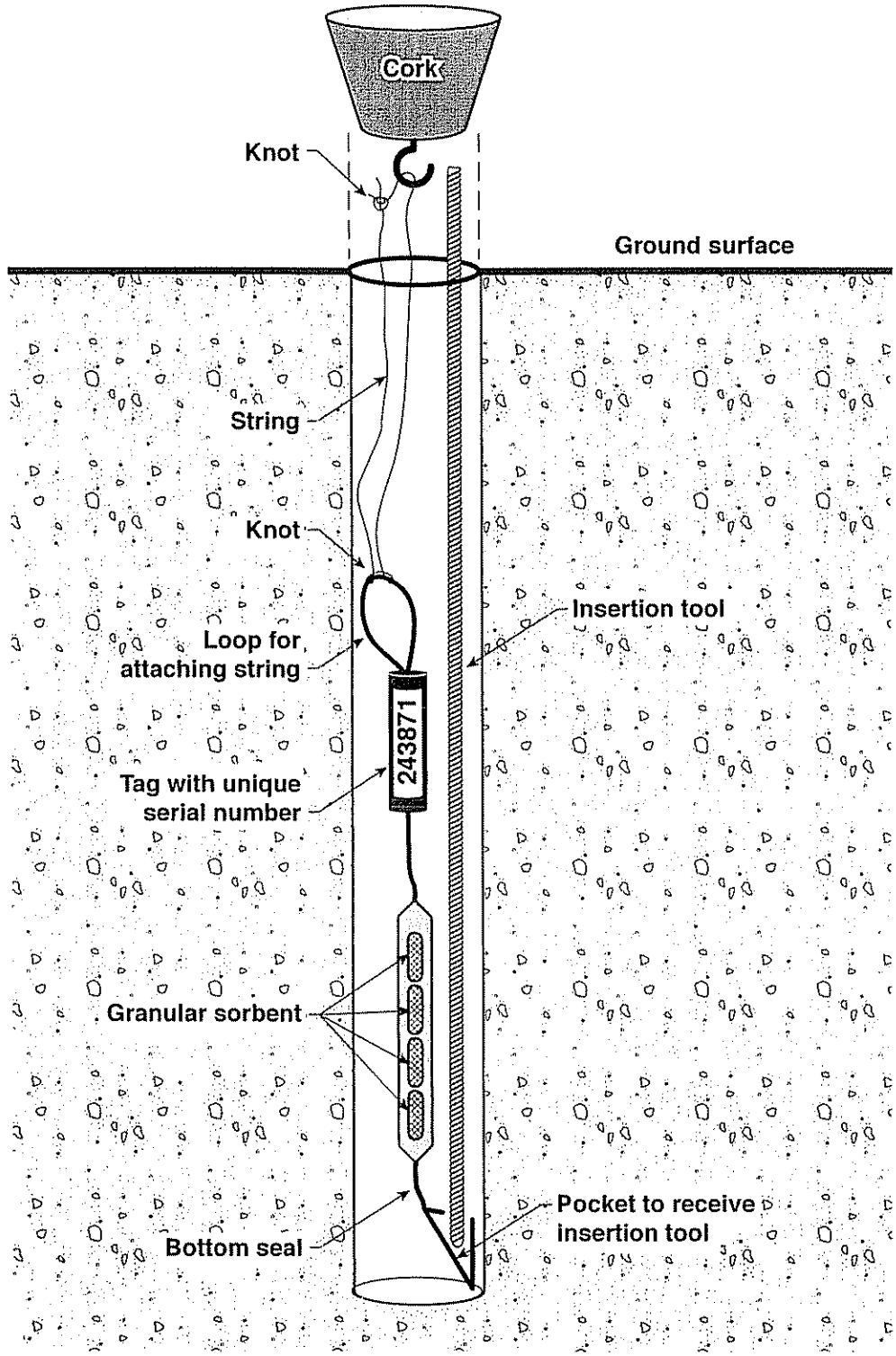

ERD-S3R-06-0049

Attachment A. Schematic of a typical Gore-Sorber® installation.

Attachment B

Passive GORE-SORBER® Methodology for Module Storage, Installation, and Retrieval Including Figures

IMPORTANT -- READ THIS FIRST

GORE-SORBER® Screening Survey
Module Storage, Installation, and Retrieval Information

NOTE: If you have any questions regarding installation and retrieval of your modules, please call Ray Fenstermacher, Jay Hodny or Diane Cooper (410) 392-7600

GENERAL

We strongly recommend that site activities which disturb the natural equilibrium of soil gas migration not be conducted during the time when the modules are in the subsurface. Such activities include, but are not limited to, installation/operation of soil vapor extraction systems, drilling (especially air-rotary), excavation on the site or in the near vicinity, air sparging, etc.

STORAGE

GORE-SORBER® Modules are specially cleaned and stored after manufacturing. They must remain sealed in their vials in the shipping boxes until deployment. **DO NOT** store them near potential sources of organic vapors, including petroleum fuels, fuel exhaust, solvents, or in areas of new construction or remodeling where paints, adhesives, foam insulating materials, etc. may be present.

REQUIRED TOOLS/SUPPLIES

GORE-SORBER Modules can be installed at any depth. Usually they require only a narrow pilot hole (approximately 1/2-inch to 3/4-inch in diameter) typically drilled or driven to a depth of 2 to 3 feet using hand tools (depending on project objectives, installation depth may vary at your site).

The following items are provided by GORE:

- Shipping boxes containing individually numbered passive soil gas collectors (Modules), including trip blanks;
- Stainless steel insertion rod, in threaded sections (for placement of modules in pre-drilled/driven pilot holes);
- Corks with screw eyes attached;
- String (cord) to allow the module to be installed to the recommended depth; and
- Chain of Custody and Installation/Retrieval Log

Additional tools (to be supplied by the customer) required for installation may include:

- Equipment to lay out and mark sample locations (scaled map, measuring tapes, pin flags, spray paint);
- Disposable gloves and equipment decontamination supplies
- Slide hammer/tile probe (slam bar) or electric rotary hammer drill (AC power outlet or portable generator and extension cords required) with carbide-tipped bits or augers (1/2 to 1-inch diameter up to 36 inches long) - information on where these items can be purchased is provided below as a courtesy and does not represent any endorsement of these products or suppliers:

Item	Supplier	Phone No.
* Slide Hammer/Tile Probes	Forestry Supplies	(800) 647-5368
* Carbide Drill Bits (36" long)	KV Associates, Inc.	(508) 539-3002
* Rotary Hammer Drill	SKILL-BOSCH Power Tools	(800) 334-5730

* Art's Manufacturing Supply (dba AMS) has all these items (800) 635-7330

GORE Creative Technologies Worldwide
W. L. Gore & Associates, Inc
100 Chesapeake Blvd., P.O. Box 10
Elkton, MD 21922-0010
Phone: 410/392-7600
Fax: 410/506-4780

GORE-TEX and GORE-SORBER are registered trademarks of W. L. Gore & Associates, Inc.
GORE SORBER and PETREX are service marks of W. L. Gore & Associates, Inc.

MODULE INSTALLATION

- Always obtain utility clearance before digging or probing.
- **We do not recommend installation of modules within 15 feet of monitoring wells, utility trenches or other conduits which may act as a preferential pathway for soil vapor migration.**
- Drive/drill narrow pilot hole at desired pre-marked location.
- Wearing clean surgical gloves, remove module from numbered container and re-seal the jar (this numbered container should correspond to the numbered module ID tag - please verify this).
- Measure and cut a section of cord that is suitable for your installation.
- Tie one end of the cord to the loop in the module, and tie the other end of the cord to the screw-eye in the appropriate size cork.
- Place insertion rod into the pre-cut pocket at the base of the module and lower it into the hole. If you encounter resistance remove the module and ream the hole and re-insert the module.
- Once deployed to the desired depth, press the insertion rod against the side of the hole and twist slightly to release the module. Remove the rod and push any excess cord into the pilot hole and plug it with the cork.
- Indicate the module number, date and time of installation and any pertinent comments on the installation/retrieval log. Write the module serial number on the site map adjacent to the appropriate map location.
- Clean the tile probe or drill bit and the insertion rod prior to use at the next location. Replace the surgical gloves as necessary before handling any modules.
- Following module installation, the modules selected as **trip blanks** should be kept in the sample box provided and stored as described above in "STORAGE" until sample retrieval.

MODULE RETRIEVAL

- Following the module exposure period (usually 10 - 14 days) identify and check each module location in the field using the site map.
- Remove the cork with a penknife or cork screw. Grasp the cord and pull the module from the ground; **verify the module ID number**. Cut off and discard the cork and cord. Place the entire module in its labeled container and tightly secure the lid.
- Replace the sample container in the box. Where possible, please attempt to keep modules in numbered sequence to expedite sample check-in and processing.
- Complete the module retrieval date/time on the installation/retrieval log.
- **Do not** use Styrofoam "peanuts" as packing material. Bubble packing is acceptable. Water ice can be added if desired, but cooling in general is not necessary. If shipping with ice, please take precautions to keep boxes dry (perhaps shipping in a cooler)
- Return the samples with insertion rod and paperwork (preferrably by overnight courier) to:

Screening Modules Laboratory
W.L. Gore & Associates, Inc.
100 Chesapeake Blvd.
Elkton, MD 21921
Phone: (410) 392-7600

Attn: NOTIFY LAB IMMEDIATELY UPON DELIVERY!!

IMPORTANT: **Samples should not be shipped for weekend or holiday delivery at GORE.**

W.L. Gore & Associates, Inc. recommends either of the following methods for tying string to our GORE-SORBER® Modules for field installation:

The Bowline Knot

Begin by forming an overhand loop in the standing part of the line. Then take the free end up through the eye, around the standing part and back where it came from. Pull to tighten. This knot will not slip if tied correctly.

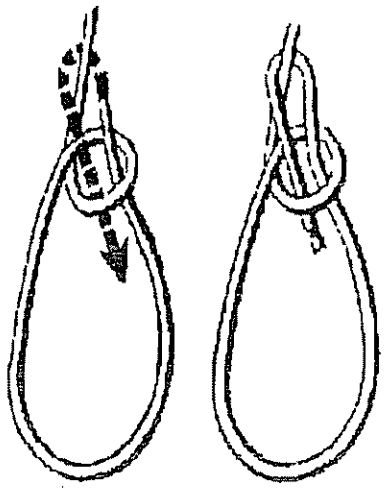

Doubled-up line:

If the module is to be installed to a depth of 3 feet, then cut a section of string that is twice that depth....in this case 6 feet. Bring the cut ends of the string together and run one of these through the loop in the module. Run one of the cut ends through the eye screw/cork (provided by GORE), and tie a knot that will not slip.

GORE-SORBER® Modules is a registered trademark of W L. Gore & Associates, Inc

GORE Creative Technologies Worldwide
W. L. Gore & Associates, Inc
100 Chesapeake Blvd., P.O. Box 10
Elkton, MD 21922-0010
Phone: 410/392-7600
Fax: 410/506-4780

Accuracy Counts

GORE-TEX and GORE-SORBER are registered trademarks of W. L. Gore & Associates, Inc
GORE SORBER and PETREX are service marks of W. L. Gore & Associates, Inc

DESCRIPTION OF SERVICE FOR SOIL GAS APPLICATIONS

Screening Survey Applications

GORE-SORBER® Screening Surveys employing GORE-SORBER® Modules (patented passive soil vapor sampling devices) have been used successfully at many sites for determining subsurface areas impacted by VOCs and SVOCs. Organic compounds commonly detected include fluorinated and chlorinated solvents, straight- and branched chain aliphatics, aromatics, and polycyclic aromatic hydrocarbons (PAHs). Many of these compounds are associated with a wide range of petroleum products, including gasoline, mineral spirits, heating oils, creosotes, and coal tars. GORE-SORBER Screening Surveys have also been used successfully to screen for nitroaromatic explosives.

Common applications include detection of compounds to: 1) trace soil and ground water plumes in porous and fractured media, 2) monitor progress of subsurface in-situ remedial actions, 3) to provide baseline data for real estate transfer assessments, and 4) to reduce groundwater monitoring costs. Prudent use of this technology can optimize and reduce soil and groundwater sampling efforts resulting in significant cost savings over the life of site assessment and remedial action programs.

Description Of GORE-SORBER Screening Modules

A typical GORE-SORBER Screening Module consists of several separate GORE-SORBER® passive sorbent collection devices (sorbers). A typical sorber is 15 to 25 millimeters (mm) long, with a 3 mm inside diameter (ID), and contains 40 milligrams (mg) of a suitable granular adsorbent material depending on the specific compounds to be detected. Typically, polymeric and carbonaceous resins are used for their affinity for a broad range of VOCs and SVOCs. The sorbers are sheathed in the bottom of a one (1) foot length of vapor-permeable insertion and retrieval cord which is fashioned with a loop. This construction is termed a GORE-SORBER module. Both the retrieval cord and sorbent container are constructed solely of inert, hydrophobic, microporous GORE-TEX® expanded polytetrafluoroethylene (ePTFE, similar to Teflon® brand PTFE). The loop is used as a means of tying the module to a string for installation and retrieval. Attachment 1 shows a typical screening module.

A unique feature of ePTFE membranes are that they are hydrophobic and exclude liquid water, yet they do not retard vapor transfer, thus allowing VOC and SVOC vapors to freely penetrate the module and collect on the adsorbent material. This ability to protect the sorbent media from contact with ground and soil pore water without retarding soil vapor diffusion facilitates the application of GORE's soil vapor screening methods in very low permeability and poorly drained soils.

Quality Assurance (QA) Measures

As standard practice, all modules are individually numbered and tracked throughout the entire manufacturing, field deployment, and analytical process. Completed modules are subjected to a final cleaning process and then sealed into a clean glass vial with a Teflon liner. All modules are transported to and from the customer's site in sealed glass vials and boxes supplied by GORE. Five to ten percent additional trip blanks will accompany the modules to and from the site. Associated manufacturing blanks and trip blanks are always tested with each project as controls. Full details of GORE's QA measures are documented in our Quality Assurance Manual.

Screening Survey Installation and Retrieval Procedures

Installation of the modules is typically performed by the customer. Although GORE-SORBER modules can be installed to any depth, a slam bar or electric rotary hammer-drill is typically used to auger a 3/4 to 1-inch diameter pilot hole for the deployment of the modules to an average depth of two (2) to three (3) feet below grade.

After the pilot hole is completed, modules are tied to a section of cord and inserted into the completed boreholes, using the stainless steel insertion rod supplied by GORE. The cord is typically fastened to a cork, which is tamped flush with the ground surface to assist in retrieval of the module, and to seal the annulus of the boring. Additional modules that are designated as trip blanks should be noted on the installation/retrieval log and left (unopened) in the shipping box for the duration of the field exposure.

Module retrieval requires that field personnel locate the module, remove the cork, grasp the cord and manually pull the module from each location. Corks and cord are separated from the module and discarded. The exposed modules are resealed in their respective designated shipping vials and placed in the supplied shipping box. Boxes with field-exposed modules and trip blanks are returned along with the Chain-of-Custody (COC) form to GORE's laboratory in Elkton, MD usually via overnight courier.

Screening Module Exposure Time

GORE's suggested module exposure time is 10 to 14 days.

Analytical Procedures

On receipt of the modules at the GORE laboratory, each box is opened, the samples are logged, and the COC is inspected. Samples are then transferred to a temporary holding facility with a positive pressure zero-air supply until analysis.

Analytical instrumentation consists of gas chromatographs and mass selective detectors, as well as automated thermal desorption units. Sample preparation simply involves cutting the tip off the bottom of the sample module and transferring an exposed sorbent container (sorber) to a thermal desorption tube for analysis. Sorbers remain clean and protected from dirt, soil, and groundwater by the insertion/retrieval cord, and require no further sample preparation. The replicate samples remain in the zero-air container until discarded. Laboratory QC is described below:

Level 2 Screening Method Quality Assurance:

This is our standard analytical screening method, which is essentially a modified EPA method 8260A/8270B. Before each run sequence, two instrument blanks, a sorber containing 5µg BFB (Bromofluorobenzene), and a method blank are analyzed. The BFB mass spectra must meet the criteria set forth in Statement of Work (SOW) for Organic Analysis Multi-Media Multi-Concentration (SOW OLM 010.0 and revisions) before samples can be analyzed. A BFB-containing sorber is also analyzed after every 30 samples and/or trip blanks, as is a method blank. Standards containing our target compounds at three calibration levels of 5, 20, and 50µg are analyzed at the beginning of each run. The %RSD criterion for all target compounds is less than 35% RSD. If this criterion is not met for any target compound, the analyst has the option of generating second- or third-order standard curves, as appropriate. A second-source reference standard, at a level of 10µg per target compound, is analyzed after every ten samples and/or trip blanks, and at the end of the run sequence. No surrogates are added. Positive identification of target compounds is determined by the presence of the target ion, at least two secondary ions, retention time versus reference standard, and the analyst's judgment. All analytical data are reported as mass of analyte, in micrograms (µg) per sample.

Laboratory data deliverables packages can be provided at the customers request, and may include all analytical results for samples, standards and blanks, and mass spectra comparisons with standards for all detects.

Interpretation of Screening Survey Data

In general, the detection of VOCs and SVOCs in field-exposed modules indicates that potential sources (i.e. soil adsorbed-, dissolved- and separate-phase organics) of the detected compound(s) may exist in proximity to the module location. The module will adsorb migrating gases present in the adjacent media (soil or water). The processes that govern the movement of gases in the subsurface are complex, involving interactions between the soil, soil moisture, pore gasses, ground water, and the volatile contaminant. Chemical and microbiological processes can further influence the presence of soil gases, by reacting with or metabolizing these compounds.

Vapor pressure, water solubility, molecular weight, and the Henry's Law partitioning coefficient, are all important chemical parameters to consider when interpreting soil vapor data. The Henry's Law coefficient reflects a compound's behavior when partitioned into air and water, which aids in understanding an organic chemical's likely state in the subsurface. An understanding of the site geology (geologic structure, geochemistry), hyrogeolology and operational history are also important when interpreting the distribution of soil gases.

Contour Maps of Soil Vapor Analytes

Graphic presentation of the data extracted from GORE-SORBER Modules is normally presented by overlaying the contamination patterns detected during analysis onto CAD maps supplied by the customer. Either minimum surface curvature or kriging models (GEOSOFT® Mapping Software) are employed. Standard "B-sized" (11" x 17") color contour plots are included with each project, however "E-size" (24" x 36") plots are available, if requested. The site plan base map(s) provided by the customer must include a scaled drawing with relevant site features, and an overlay containing the sample locations for the survey.

Tentatively Identified Compounds (TICs)

Some of the modules may contain non-target analytes (compounds not on GORE's target list). GORE can provide tentative identification of prominent non-target compound peaks (TICs). These compounds can include non-target soil vapor analytes, and contaminants introduced during sample transport and installation/retrieval activities.

Reporting of Results

The results of the GORE-SORBER Screening Survey will be summarized in a brief report, which will include the chain of custody, analytical data summary table, sample chromatograms, and color contour maps. A laboratory analytical data deliverables package incorporating results of samples, standards and blanks, and mass spectra compared to standards for all detects can be provided as an option.

GORE-SORBER Screening Survey is a registered Service mark of W. L. Gore & Associates, Inc.
GORE-SORBER is a registered trademark of W. L. Gore & Associates, Inc.
GORE-TEX is a registered trademark of W. L. Gore & Associates, Inc
Teflon is a registered trademark of E. I. duPont de Nemours & Company, Inc.
GEOSOFT is a registered trademark of GEOSOFT, Inc.

GORE-SORBER® Screening Surveys
Analytical Options

COMPOUND SPECIFIC SURVEYS

All options include soil gas collectors, analysis, three color contour maps and final report in duplicate

A1 Gore Standard VOCs/SVOCs

Analysis via TD/GC/MS with results quantified for the following analytes:

Methyl t-butyl ether	1,1,1-Trichloroethane	Toluene	m,p-Xylene	Undecane
trans-1,2-Dichloroethene	Benzene	Octane	o-Xylene	Naphthalene
1,1-Dichloroethane	Carbon tetrachloride	Tetrachloroethene	1,3,5-Trimethylbenzene	Tridecane
cis-1,2-Dichloroethene	1,2-Dichloroethane	Chlorobenzene	1,2,4-Trimethylbenzene	2-Methyl naphthalene
Chloroform	Trichloroethene	Ethylbenzene	1,4-Dichlorobenzene	Pentadecane

A2 Fuel Hydrocarbons

Analysis via TD/GC/MS with results quantified for the following analytes:

Methyl t-butyl ether	Ethylbenzene	Octane	Pentadecane	Naphthalene
Benzene	m,p-Xylene	Undecane	1,3,5-Trimethylbenzene	2-Methylnaphthalene
Toluene	o-Xylene	Tridecane	1,2,4-Trimethylbenzene	

A3 Selection of ANY EIGHT (8) compounds from Gore Standard VOCs/SVOCs list (A1)

Analysis via TD/GC/MS with results quantified for any eight compounds selected from the A1 list (see above).

A4 Gore Standard VOCs/SVOCs (A1) plus Additional PAHs

Analysis via TD/GC/MS with results quantified for the following analytes:

Methyl t-butyl ether	Trichloroethene	1,2,4-Trimethylbenzene	Acenaphthylene
trans-1,2-Dichloroethene	Toluene	1,4-Dichlorobenzene	Acenaphthene
1,1-Dichloroethane	Octane	Undecane	Fluorene
cis-1,2-Dichloroethene	Tetrachloroethene	Naphthalene	Phenanthrene
Chloroform	Chlorobenzene	Tridecane	Anthracene
1,1,1-Trichloroethane	Ethylbenzene	2-Methyl naphthalene	Fluoranthene
Benzene	m,p-Xylene	Pentadecane	Pyrene
Carbon tetrachloride	o-Xylene		
1,2-Dichloroethane	1,3,5-Trimethylbenzene		

A6 Gore Standard VOCs/SVOCs (A1) plus Explosives

Analysis via TD/GC/MS with results quantified for the following analytes:

Methyl t-butyl ether	Trichloroethene	1,2,4-Trimethylbenzene	3-Nitrotoluene
trans-1,2-Dichloroethene	Toluene	1,4-Dichlorobenzene	4-Nitrotoluene
1,1-Dichloroethane	Octane	Undecane	1,3-Dinitrobenzene
cis-1,2-Dichloroethene	Tetrachloroethene	Naphthalene	2,6-Dinitrotoluene
Chloroform	Chlorobenzene	Tridecane	2,4-Dinitrotoluene
1,1,1-Trichloroethane	Ethylbenzene	2-Methyl naphthalene	1,3,5-Trinitrobenzene
Benzene	m,p-Xylene	Pentadecane	2,4,6-Trinitrotoluene
Carbon tetrachloride	o-Xylene	Nitrobenzene	4-Amino-2,6-dinitrotoluene
1,2-Dichloroethane	1,3,5-Trimethylbenzene	2-Nitrotoluene	2-Amino-4,6-dinitrotoluene

A7 CUSTOM Target List

Analysis via TD/GC/MS with results quantified for a target list of compounds as defined by the customer.

A10 Gore Chlorinated VOCs

Analysis via TD/GC/MS with results quantified for the following analytes:

1,1-Dichloroethene	Chloroform	Trichloroethene	1,1,2-Trichloroethane	1,2-Dichlorobenzene
trans-1,2-Dichloroethene	1,1,1-Trichloroethane	Tetrachloroethene	1,1,1,2-Tetrachloroethane	1,3-Dichlorobenzene
1,1-Dichloroethane	Carbon tetrachloride	Chlorobenzene	1,1,2,2-Tetrachloroethane	1,4-Dichlorobenzene
cis-1,2-Dichloroethene	1,2-Dichloroethane			

- addition of vinyl chloride to the above options is possible for an additional fee

NON-COMPOUND SPECIFIC SURVEYS

A9a Gore Total Petroleum Hydrocarbons (TPH)

Analysis via TD/GC/MS with non-compound specific results. Suitable for sites impacted with petroleum hydrocarbons where compound specific results are not required. Similar to a conventional "TPH" analysis for soil or ground water, but with some significant differences from conventional analysis. Compound specification can be added post-survey without further sampling or analysis for an additional fee.

A9b Gore Gasoline & Diesel Range Petroleum Hydrocarbons (GRPH/DRPH)

Analysis via TD/GC/MS similar to above option, but with results presented for gasoline and diesel range hydrocarbons separately. Compound specific results can be added post-survey without further sampling or analysis for an additional fee.

Miscellaneous Add-on Options

Expedited Turnaround Time ..... By Quotation (25% to 50%)

Normal turnaround time for DATA on sample sets less than 100 is approximately two weeks following receipt of samples at the laboratory. Expedited turnaround of sample data can be reviewed on a project by project basis. Samples are generally analyzed in the order in which received. Expedited charges will only be assessed if the required data delivery date cannot be met without adjustments to the project run sequence.

QA Deliverables ..... 8% surcharge

Laboratory data deliverables packages include BFB tune data, initial calibration data, sample, trip blank, field blank, method blank and instrument blank chromatograms

Library Search/TICs (Only available in addition to Standard Analysis) $5/Compound/Module

Selection Criteria

for

Passive Soil Gas Technology

as recommended by
W. L. Gore & Associates, Inc.

Collector Installation to Recommended Depths

Soil gas collectors should be designed for installation and retrieval at depths greater than 2 feet without additional casing of the pilot hole.

NJDEP[1] and NGWA[2] guidelines clearly state that the recommended depth for any soil gas should be 2 to 3 feet below ground surface. Significant loss of sensitivity will occur when sampling for soil gas at shallow depths. This loss of sensitivity is a function of higher outgassing rates near the soil surface, increased microbial activity, and greater impact on the shallow soil environment from precipitation, temperature, and other atmospheric parameters. Under paved or impermeable surfaces, the potential for concentrating soil gas vapor and horizontal migration of soil gases increases the need for adhering to the guidelines for installation depths.

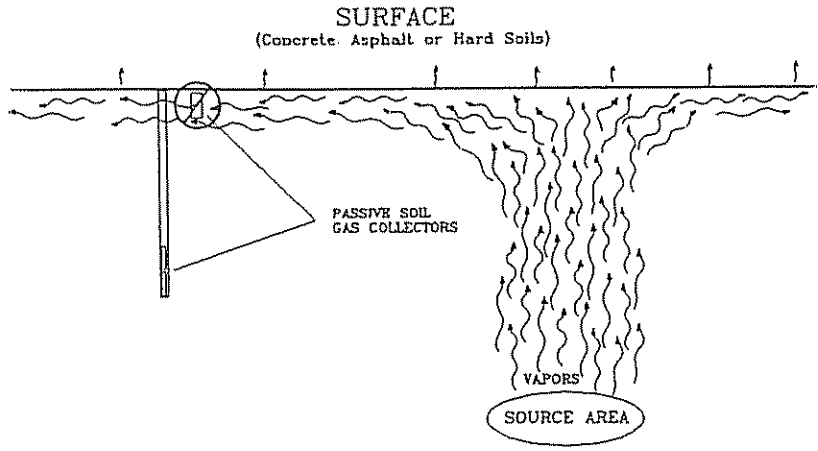

Unimpeded Vapor Migration to the Sorbents

The combination of liquid water condensing inside the collector and the natural tendency for closed-end containers to impede the migration of gases has a significant impact on overall sensitivity.

Allowing soil gases (organics as well as water vapor) to migrate freely or "flux" past the sorbents is important. Closed-end collectors, such as glass vials or tubes, impede the natural migration of vapors to the sorbent. Additionally, glass vials promote condensation on the inside of the collector when installed in the subsurface. This condensed water acts as a "sorbent" by "scrubbing" organic gases back into the dissolved phase making them less available for adsorption on the solid sorbent.

Protection of Sorbents from Soil and Liquid Water

Collector design must employ materials of construction that are chemically inert, and must ensure that the sorbents are protected from direct contact with liquid water or soil particles.

The collector materials must be chemically inert and rugged enough to withstand handling in the field, insertion and retrieval from the subsurface, exposure to the subsurface, and shipping. Direct contact of the sorbent with liquid water or soil particles destroys the integrity of a soil gas sample.

Sorbent Type

Selection of a single sorbent system that optimizes sensitivity to target compounds, hydrophobicity, and minimization of competition for sorption sites by different target compounds is the responsibility of the passive soil gas provider.

Research has been completed that focused on measuring each of these parameters for a wide variety of sorbents. Clearly, the use of activated carbon as a sorbent is unacceptable due to the high uptake of water vapor - some types adsorb up to 70% of their own weight in water vapor.

- **The result is decreased sensitivity as less sorption sites are available for organic soil gases.**

FIGURE 3: Water Sorption Data for Selected Sorbents

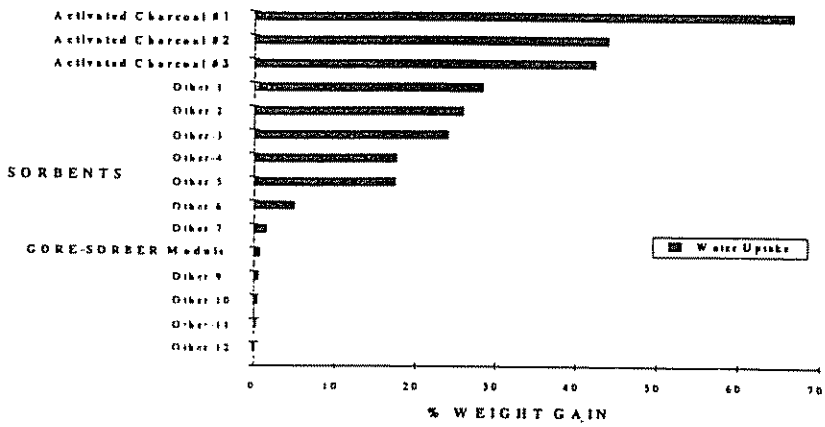

Sorbent Packaging

The use of collectors with poorly packaged sorbents introduces variability that impacts results adversely and cannot be measured.

The packaging of sorbents for use in the subsurface must ensure that no sorbent is lost during field use or shipping (every collector must have an identical amount of sorbent). This is a critical consideration due to the relative nature of passive soil gas results. The primary value of the results is the relative distribution of adsorbed compounds across the area of interest.

Sorbent Amount

The impact of having too little sorbent in a passive soil gas collector minimizes overall sensitivity and increases the chance of sorbent saturation at high soil gas concentrations.

Analytical Method

When specifying the analytical method, it is important to consider the overall objective of the soil gas survey and the expectations for applying the results.

The selection of an analytical method is an important criteria as this can have a significant impact on compound identification, QA/QC, data quality, data integrity, and cost. The facility analyzing the soil gas samples must follow a relevant QA/QC plan, have experience in soil gas analysis, and have supporting credentials and approvals for soil gas analyses.

[1]Field Sampling Procedures Manual, ed J R. Schoenleber and P S. Morton, New Jersey Department of Environmental Protection and Energy, 364pp., 1992

[2]Devitt, Dale A., Evans, Roy B., Jury, William A., and Starks, Thomas H., Soil Gas Sensing for Detection and Mapping of Volatile Organics, National Groundwater Association, Dublin, OH

Why Passive Soil Gas?

The primary objective of employing a passive soil gas technology is similar to all environmental screening level methods. The objective is to reduce the overall cost of an investigation or long-term monitoring program, while increasing the sampling density relative to conventional methods.

Passive soil gas technology was developed and has evolved due to the limitations of other screening techniques, particularly active soil gas. For sites with impact from VOCs and permeable soils, active soil gas methods have been proven effective.

However, active soil gas methods are not applicable on sites with low permeability or poorly-drained soils. This is primarily due to the lack of available soil gases for detection in the short sampling intervals used. The time-integrated, sorbent based approach of passive sampling overcomes these limitations and has been validated on these type of sites.

For investigations where SVOCs or PAHs are the target compounds, passive soil gas technology can be applied successfully. (Research shows that compounds up to and including pyrene can be detected successfully in the vapor phase.) Active soil gas systems are normally limited to VOC investigations.

Passive soil gas systems have also been successfully applied in delineating deeper ground water plumes (up to 100 ft. with appropriate conditions). Due to their limited sensitivity, active methods are normally only applied for shallow soil or ground water investigations.

Finally, it is possible to apply some passive collectors in the saturated zone or directly in monitoring wells to help reduce the cost of long term monitoring programs. The flexibility of passive systems is the result of research & development aimed at addressing the needs of environmental professionals and filling the gaps left by conventional soil gas methods.

Developing and producing an effective passive soil gas survey requires an experienced multi-disciplinary team. Understanding the limitation as well as the strengths of passive soil technologies leads to appropriate and successful applications and can avoid misinterpretation and a misunderstanding of the results.

GORE
Creative Technologies Worldwide

W. L. Gore & Associates, Inc.
100 Chesapeake Boulevard • P. O. Box 10 • Elkton, MD 21922-0010
Phone: 410/392-7600 • Fax: 410/506-4780

W. L. GORE & ASSOCIATES, INC.

100 CHESAPEAKE BLVD., P.O. BOX 10 • ELKTON, MARYLAND 21922-0010 • PHONE: 410/392-7600
FAX: 410/506-4780

Creative Technologies Worldwide

GORE-SORBER® SCREENING SURVEY CAD MAP INSTRUCTIONS

Thank you for your recent purchase of a GORE-SORBER Screening Survey. It is our goal to make certain that you are happy with our service for this project, so please do not hesitate to contact us with any questions at (410)392-7600.

- **Currently, we ask that the CAD drawing be generated in AutoCAD® Release 14 or earlier. If you are using another CAD program, please export and save the file in DXF format from your CAD system.**
- **The CAD file can be mailed to the address above, attention Jay Hodny or Ray Fenstermacher, or sent by e-mail to jhodny@wlgore.com or rfenster@wlgore.com.**
- To help insure that we deliver results on time, please comply with our specifications for the supply of a CAD map of your site to Gore:

  Upon installation of the GORE-SORBER® Screening Modules, **a CAD map showing the module locations identified with the module serial number** should be generated and forwarded to Gore (in advance of the return shipment of exposed modules).

  The site drawing should include:

  - A minimum number of layers with no additional hidden or frozen layers; all colored white.
  - Locational entities - such as buildings, streets, property lines, etc...; all colored white.
  - **The module locations clearly marked and labeled with the module serial number.**
  - **A graphical scale.** 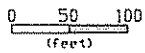

  - Be drawn in decimal ground units of the survey (i.e., feet as opposed to plot inches or architectural units); checked with the graphical scale. For example, if the graphical scale above is measured in AutoCAD, the distance will read 100, if drawn in the correct ground units (feet).
  - Exploded blocks.
  - Hard copy to be sent with diskette.
  - Include any special font or other files used to generate the drawing.

GORE-SORBER Screening Module is a registered trademark of W L. Gore & Associates, Inc
GORE-SORBER Screening Survey is a registered Service mark of W. L. Gore & Associates, Inc
AutoCAD is a registered trademark of Autodesk, Inc

ASIA • AUSTRALIA • EUROPE • NORTH AMERICA
GORE-SORBER and PETREX are registered service marks of W. L. Gore & Associates, Inc
GORE-TEX and GORE-SORBER are registered trademarks of W. L. Gore & Associates, Inc.

Attachment C

Equipment Checklist

EQUIPMENT CHECKLIST

General Materials

____Broom and dust pan
____Container for H_2O
____Ear plugs
____Extension cord
____First aid kit
____Flashlight
____Garbage bags
____Geologist's hammer
____Work gloves and sampling gloves
____Handiwipes
____Logbook
____Maps (site and sample location)
____Mixing bucket
____Notebook and clipboard
____Pens
____Personal protective equipment
____Pin flags or wooden stakes
____Pliers and wire snips
____Poly rope
____Quick-plug cement
____Ribbon flagging
____Engineer's scale and calculator
____Safety glasses
____Scissors
____Spray paint
____Tool box
____Trowel
____Utility bucket

Attachment D

Example GORE-SORBER® Sreening Survey

Installation and Retrieval Log

GORE-SORBER® Screening Survey Installation and Retrieval Log

Page 1 of 1

SITE NAME & LOCATION

LLNL

TFC-HS

LINE #	MODULE #	INSTALLATION DATE/TIME	RETRIEVAL DATE/TIME	EVIDENCE OF LIQUID HYDROCARBONS (LPH) or HYDROCARBON ODOR *(Check as appropriate)*			MODULE IN WATER *(check one)*		COMMENTS
				LPH	ODOR	NONE	YES	NO	
1 46	493391								
2. 47	493392								
3. 48	493393								
4. 49	493394								
5. 50	493395								
6. 51	493396								
7. 52	493397								
8. 53	493398								
9. 54	493399								
10. 55	493400								
11 56	493401								
12. 57	493402								
13. 58	493403								
14. 59	493404								
15. 60	493405								
16.	493406								
17									
18.									
19.									
20.									
21.									
22.									
23.									
24.									
25.									
26.									
27.									
28.									
29.									
30.									
31									
32.									
33.									
34.									
35.									
36.									
37.									
38.									
39.									
40									
41.									
42.									

GORE-SORBER ® Screening Survey is a registered service mark of W. L. Gore & Associates, Inc

Attachment E

Example GORE-SORBER® Screening Survey

Chain of Custody

GORE-SORBER® Screening Survey Chain of Custody

For W L. Gore & Associates use only
Production Order # 12757430

W. L. Gore & Associates, Inc., Survey Products Group
100 Chesapeake Boulevard • Elkton, Maryland 21921 • Tel. (410) 392-7600 • Fax (410) 506-4780

Instructions: Customer must complete ALL shaded cells

Customer Name: LAWRENCE LIVERMORE	Site Name: VARIOUS SITES
Address: UNIVERSITY OF CALIF	Site Address: LLNL
PO BOX 5110	SITE 3
LIVERMORE CA 94551	Project Manager: JOHN KARACHEWSKI
Phone: (925) 424 5063	Customer Project No :
FAX:	Customer P.O. #: B560319 Quote #:

Serial # of Modules Shipped				# of Modules for Installation 14 # of Trip Blanks 2		
# 493391	- # 493406	#	- #	Total Modules Shipped: 16 Pieces		
#	- #	#	- #	Total Modules Received: Pieces		
#	- #	#	- #	Total Modules Installed: Pieces		
#	- #	#	- #	Serial # of Trip Blanks (*Client Decides*)		#
#	- #	#	- #	#	#	#
#	- #	#	- #	#	#	#
#	- #	#	- #	#	#	#
#	- #	#	- #	#	#	#
#	- #	#	- #	#	#	#
#	- #	#	- #	#	#	#
#	- #	#	- #	#	#	#
Prepared By: Marguerite Wright				#	#	#
Verified By: Madlene Hollowday				#	#	#

Installation Performed By:	Installation Method(s) (*circle those that apply*):
Name (*please print*):	Slide Hammer Hammer Drill Auger
Company/Affiliation:	Other:
Installation Start Date and Time: / / :	AM PM
Installation Complete Date and Time: / / :	AM PM
Retrieval Performed By:	Total Modules Retrieved: Pieces
Name (*please print*):	Total Modules Lost in Field: Pieces
Company/Affiliation: 1	Total Unused Modules Returned: Pieces
Retrieval Start Date and Time: / / :	AM PM
Retrieval Complete Date and Time: / / :	AM PM

Relinquished By Marguerite Wright	Date	Time	Received By:	Date	Time
Affiliation: W.L. Gore & Associates, Inc.	6-6-06	11:30	Affiliation:		
Relinquished By	Date	Time	Received By:	Date	Time
Affiliation:			Affiliation:		
Relinquished By	Date	Time	Received By:	Date	Time
Affiliation			Affiliation: W.L. Gore & Associates, Inc.		

GORE-SORBER ® Screening Survey is a registered service mark of W L. Gore & Associates, Inc

LLNL Environmental Restoration Division (ERD)
Standard Operating Procedure (SOP)

ERD SOP 1.11: Soil Surface Flux Monitoring of Gaseous Emission —Revision: 2

AUTHOR(S):
S. Martins

APPROVALS: **Date**

Jesse Yow — 8/30/06
Division Leader

5-9-06
Engineering and Operations Group Leader

CONCURRENCE: **Date**

Rebecca Goodrich — 8/4/06
QA Implementation Coordinator

1.0 PURPOSE

This procedure describes the use of emission isolation flux chambers. Emission isolation flux chamber measurements are used to quantify the rate of loss of contaminants, such as volatile organic compounds (VOCs), from soil and ground water to the atmosphere.

2.0 APPLICABILITY

Emission isolation flux chamber data are used to plan remediation of contaminated sites and to monitor the effectiveness of remediation efforts. Emission rates calculated from these data may be used together with exposure models to estimate human health effects. ERD work activities are conducted within the framework of the institutional Integrated Safety Management System (ISMS). The Environmental Management System (EMS) is a component of the ISMS, which is also supported during the planning, performing, and evaluation of the work processes.

3.0 REFERENCES

3.1 Kienbusch, M. (1986), *Measurement of Gaseous Emissions Rates from Land Surfaces Using an Emission Isolation Flux Chamber*, User's Guide, EPA Users Guide, Contract No. 68-02-03389-WA18 (EPA/600/8-86/008).

3.2 Eklund, B. (1983), "Practical Guidance for Flux Chamber Measurements of Fugitive Volatile Organic Emission Rates," J. Air Waste Management Assoc., 42:1583-1591.

3.3 U.S. EPA (1989), *Risk Assessment Guidance for Superfund, Vol. I: Human Health Evaluation Manual, Part A, Interim Final*, Office of Emergency and Remedial Response, U.S. Environmental Protection Agency, Washington, D.C. (EPA/540/1-89/002).

3.4 Air Toxics LTD (1998), *Air Toxic Guide to Air Sampling and Analysis, Third Edition*, Air Toxics LTD, Flosum, CA.

4.0 DEFINITIONS

See SOP Glossary.

5.0 RESPONSIBILITIES

5.1 Division Leader(DL)

The DL's responsibility is to ensure that all activities performed by ERD at the Livermore Site and Site 300 are performed safely and comply with all pertinent regulations and procedures, and provide the necessary equipment and resources to accomplish the tasks described in this procedure.

5.2 Project Leader (PL)

The PL's responsibility is to ensure that all activities are performed safely and comply with all pertinent regulations and procedures, work is authorized through an Integration Work Sheet (IWS), institution requirements are followed, and there is sufficient funding to initiate the work.

5.3 Engineering and Operations Group Leader (EOGL)

The EOGL's responsibility is to ensure that proper procedures are followed for activities (e.g., construction, activation, facility operation and sampling).

5.4 Site Safety Officer (SSO)

The SSO's responsibility is to ensure that fieldwork is conducted safely and in compliance with applicable IWSs, Site Safety Plans, SOPs, and any other applicable safety related documentation.

5.5 Activity Leader (AL)

The AL's responsibilities are to write the sampling plan, oversee the field team, deliver all data to the DMT, review the data collected, and prepare any final reports.

5.6 Field Team

The field team is responsible for assembling and testing supplies and equipment prior to work in the field. The field team is responsible for field record-keeping and for collecting all samples according to the sampling plan, applicable SOPs, and IWSs. The field team may make changes to the sampling plan in the field if required by logistics or terrain when authorized by the AL.

5.7 Data Management Team (DMT)

The DMT's responsibilities are to receive and process data according to applicable procedures and assist in developing sampling plans and sampling location IDs.

6.0 PROCEDURE

6.1 The Sampling Plan

6.1.1 The sampling plan shall contain a site map with sampling areas and locations clearly marked. Each location will be assigned an area designation and location number that will be used on Chain-of-Custody (CoC) forms to identify samples taken at that location.

6.1.2 The number of samples and sampling locations will be selected based on sampling objectives, previous site characterization, ERD Data Quality Objectives (DQOs), and the sampling methodologies recommended in Reference 3.1. Field blanks and equipment blanks will be taken at times and locations specified by the sampling plan in order to meet or exceed these DQOs.

6.1.3 Modifications to the sampling plan are permitted in the field during sampling operations if past history, data anomalies or logistical problems make this necessary. These decisions are made by the person designated by the AL.

6.2 Safety Considerations

Work activities described by this SOP shall be conducted in accordance with IWS 11534 "Treatability Testing and Related Activities" at the Livermore Site and IWS 11341 "Ground Water and Soil Vapor Treatment Facility Operations" at Site 300.

6.3 Office Preparation

6.3.1 The day before flux measurements are made, the internal batteries in the flux chamber controller box, the data logger unit, and the laptop computer must be charged to ensure that enough power is available to perform the flux measurements and record all relevant data.

6.3.2 Prior to departure for the field site, the following supplies must be assembled:

A. Log Book.

B. Appropriate field forms such as Soil Surface Flux Log Sheets (Attachment C) and CoC Forms.

C. Flux chamber controller box with charged internal battery.

D. Flux chamber.

E. Cylinder of compressed zero-air or columns of activated carbon and desiccant for ambient air treatment.

F. Air-pressure regulator or ambient air pump.

G. Data logger(s) equipped with ambient air temperature sensor. If data logger requires programming, be sure to set the time (Pacific Standard Time) and date, and download sampling program before departing to the field.

H. Clean tubing and connections for the analyte-free air supply.

I. Laptop computer with charged internal battery and a sufficient number of charged external batteries to last over the sampling period.

6.4 Field Preparations

6.4.1 Position the flux chamber on the substrate at the sample location. The rim of the flux chamber should be worked into the surface 2–3 cm. to minimize ambient air intrusion.

6.4.2 Secure the zero-air cylinder to a stake or other upright structure with a strap. Connect the air-pressure regulator to the cylinder and to the "Sweep In" port of chamber controller box using 1/4-in. flexible tubing with a quick-disconnect fitting.

6.4.3 Place the chamber controller on a level surface and adjust the Magnahelic to read 1.0 inches H_2O (the indicator will be centered and vertical).

6.4.4 Connect the "Sweep Out" port of the chamber controller box to the central port on the flux chamber using 1/4-in. tubing with a quick-disconnect fitting. Using 1/4-in. tubing, connect the "Return" port on the controller to the lateral port of the flux chamber with no internal connections. Connect the "Mag" (Magnahelic) port on the controller to a lateral port of the flux chamber with no internal protrusions. Consult Attachment B for proper Flux Chamber connections.

6.4.5 Connect the 4-pin electrical plug from the chamber to the "Fan" port of chamber controller. Connect the "Sensor Out" port on the controller box to the data logger.

6.5 Operations

6.5.1 Startup procedures

A. Place the controller box switches labeled "Fan" and "Pump" in the "On" position. Turn on the zero-air cylinder and adjust the controller box "Sweep Air" rotometer to a setting that will give a flow of about 3.2 L/minute. Adjust the "Return Air" rotometer to a setting that will also give a flow of about 3.2 L/minute. Fine tune this setting, as required, so that the net

pressure drop between the atmosphere and the chamber is zero (Magnahelic reading of 0.5).

B. Maintain these conditions for at least 30 minutes, allowing the chamber to come to equilibrium with VOCs diffusing from the soil.

6.5.2 Sampling procedures

A. Attach the sampling device to a port on top of the flux chamber that is not connected to any internal tube within the chamber. Enter the sample number and the serial number of the sampling device (Summa canister or sorbent cartridge) on the data logging form. Consult relevant manufacture's instructions and manuals for the proper use of each device (e.g., Air Toxics, 3.4).

B. Log sampling conditions (e.g., chamber temperature and sample device condition, such as the vacuum of a Summa Canister) and the start time on the data logging form. Begin sampling by filling the Summa canister or passing known volume of air through sorbent trap. Because any type of sampling device will withdraw air from the chamber, it is necessary to compensate for this by reducing the flow rate of the "Return Air" rotometer on the controller box by the sampling flow rate. The sample flow rate plus the "Return Air" flow rate cannot exceed the "Sweep Air" flow rate. To do so would cause ambient air to be pulled into the chamber, thus increasing the effective Sweep Rate and running the risk of introducing non-soil analytes into the chamber. Log the "Sweep Air" and "Return Air" flow rates on the data logging form.

C. After a sample has been taken, log the stop time, final flow rates, sample volume or Summa canister vacuum and chamber temperature on the data logging form.

D. Enter the sample number and other requisite information on the CoC form. Label the sampling device (Summa canister or sorbent cartridge) with the sample number, data and time.

6.5.3 Equipment Blanks

A. One equipment blank is usually taken at the beginning of the day and at the conclusion of sampling for each flux chamber.

B. Place the flux chamber on a contaminate-free stainless steel surface. Teflon has a tendency to absorb then release VOCs to which it is exposed. Therefore, Teflon sheets should not be used for this purpose, unless the user can guarantee that the Teflon is not off-gassing VOCs. The stainless steel sheets may be baked-out from time to time to remove any residues.

C. Set up the equipment as described in Sections 6.2 and 6.3.1. Collect sample as described in Section 6.3.2.

6.5.4 Trip Blanks

A. Select unused sampling device(s) and designate it/them as a trip blank(s) as described in the sampling plan (at least one per day).

B. Attach a sample identification number to the trip blank as described in the sampling plan, and enter this information on the CoC.

C. Send the trip blank to the contract analytical laboratory with other samples taken that day.

6.5.5 Collocated Samples

Collocated samples will be collected at the frequency indicated by the sampling plan and usually depends on the sampling media. For canisters, 10% are usually collected as collocated samples. For sorbent cartridges, replicate samples at each location are usually collected.

6.6 Post Operation

6.6.1 Handle and ship all samples according to SOP 4.4, "Guide to Handling, Packaging, and Shipping of Samples." Summa canisters do not need to be placed in coolers and have no preservation requirement. However, Summa canisters should be shipped to the analytical laboratory for analysis within 24 hours.

6.6.2 If a data logger was used to record chamber and ambient temperature and chamber differential pressure, download these data to a computer and save to a file so that they will be available for use in the flux calculations.

6.7 Data Analysis

6.7.1 When analytical results are available, the concentrations of each analyte should be converted into $mg \cdot m^{-3}$. If the analytical laboratory reports the concentration of each analyte as ppb(v/v) or ppm (v/v), convert the concentration to $mg \cdot m^{-3}$ using the following equations:

C = ppb * (analyte's molecular weight in grams)/24.4 or,

$C = (ppm * 10^3) * (analyte's molecular weight in grams)/24.4.$

Where 24.4 L/mole is the number of liters per mole of air (L/mole) at 2°C.

The flux rate, F, $(mg \cdot m^{-2} \cdot min^{-1})$ may then be calculated for each analyte by using the following equation:

$F = SR*(C / SV) /A$

where

SR = Sweep rate $(m^3 \cdot min^{-1})$,

C = Total $mg \cdot m^{-3}$ of analyte, and

A = Basal area of the flux chamber.

6.7.2 Compare the equipment and/or trip blank sample concentrations to the concentrations of the same chemicals detected in the samples. In accordance with Reference 3.3, soil flux measurements from individual analyses with a VOC concentration less than five times the maximum VOC concentration detected in

any equipment and/or trip blank sample are treated as nondetections. However, all sampling should be conducted to minimize any detection in blank samples.

6.8 Clean Up

6.8.1 If the results of the post-sampling equipment blank reveal analyte residual in the chamber or support equipment, the following procedure should be used to decontaminate the equipment.

A. Disassemble the chamber and wash all interior surfaces with 0.1% Triton X-100 in de-ionized water. Rinse or wipe all parts three times with solvent-free distilled water. Air-dry all parts in a clean environment and reassemble the unit.

B. Replace all air-line tubing as needed to prevent leakage or to eliminate contamination.

7.0 QA RECORDS

7.1 Chain-of-Custody Forms

7.2 Logbooks

7.3 Sampling and Analysis Plans

7.4 Soil Surface Flux Log Sheet

8.0 ATTACHMENTS

Attachment A—Schematic of Flux Chamber

Attachment B—Soil Surface Flux Chamber Connections

Attachment C—Soil Surface Flux Log Sheet

Attachment A

Schematic of Flux Chamber

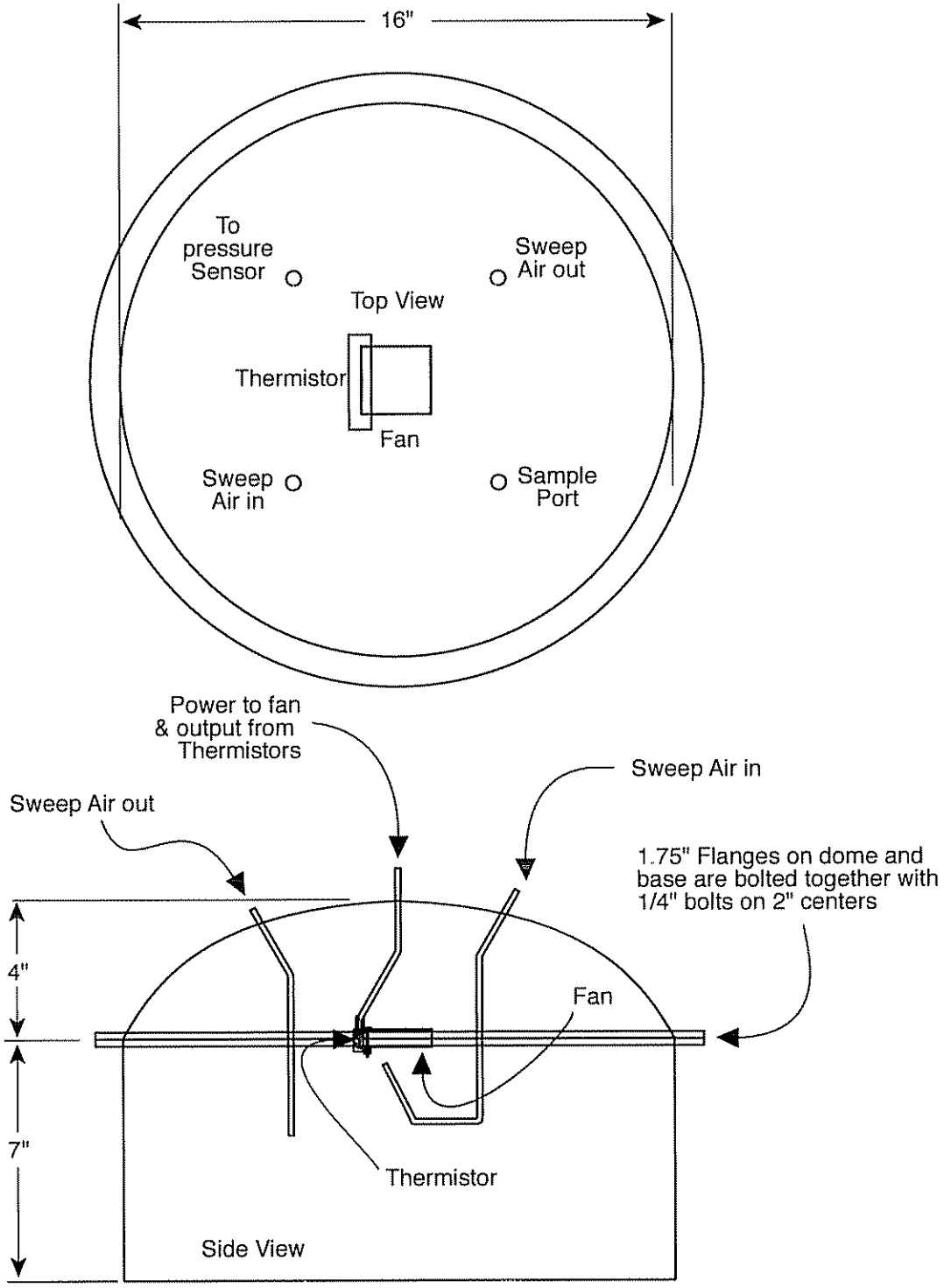

ERD-LSR-06-0012

Attachment A. Schematic of flux chamber.

Attachment B

Soil Surface Flux Chamber Connections

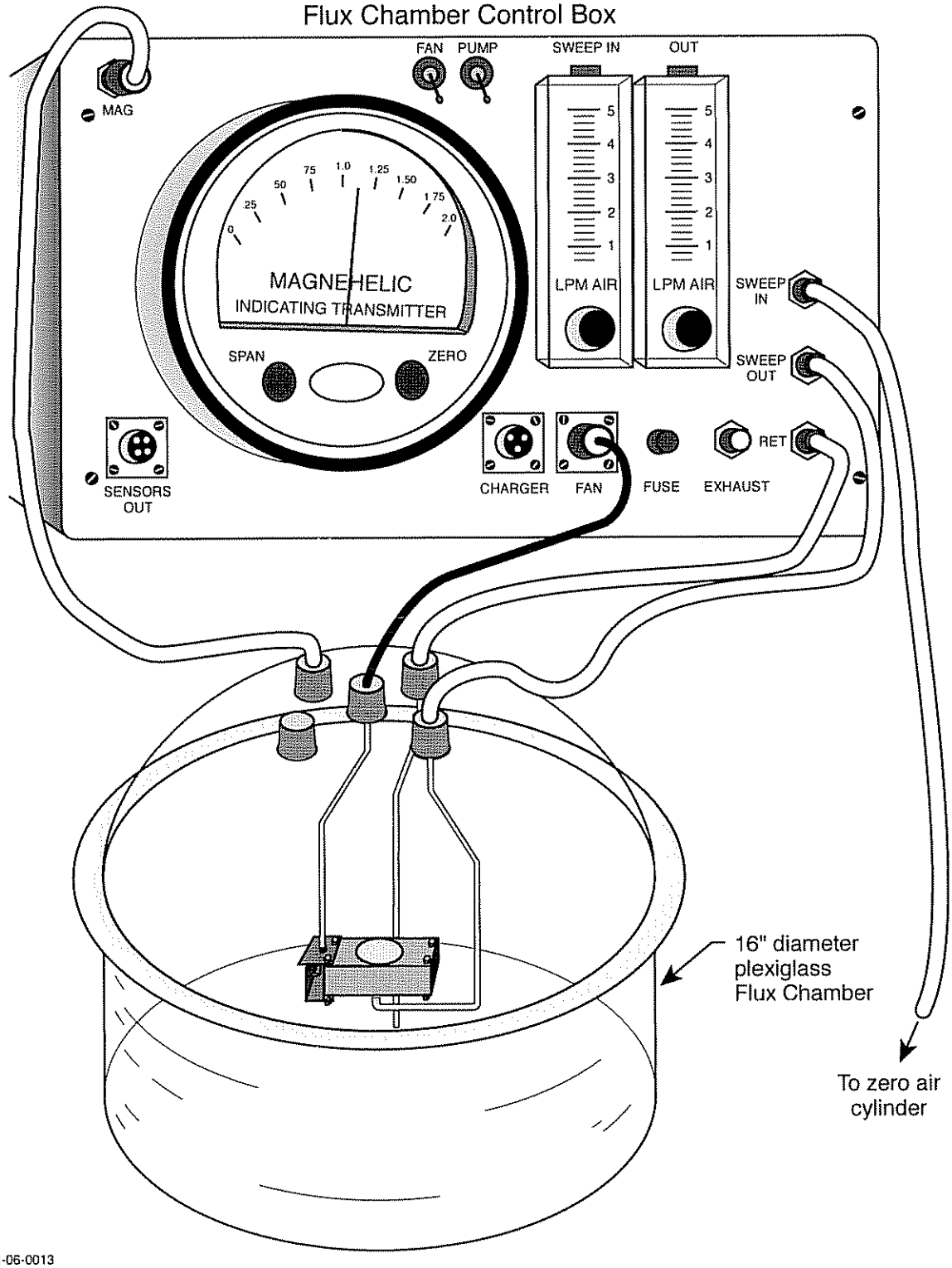

Attachment B. Soil surface flux chamber connections.

Attachment C

Soil Surface Flux Log Sheet

Soil Surface Flux Log Sheet

Soil Surface Flux Log Sheet #_____

Site Number:_____ Date:_____ Chamber:_

Purge Start:_____ Sweep In:_____ Sweep Out:_____ Air Temp:___
Sample Start:___ Sweep In:_____ Sweep Out:_____ Ch. Temp:_____
#_____ Stop:___ Sample Volume:___ Tube/Canister ID:_____
Notes:_____Initials:_____
Sample Start:___ Sweep In:_____ Sweep Out:_____ Ch. Temp:_____
#_____ Stop:___ Sample Volume:___ Tube/Canister ID:_____
Notes:_____Initials:_____
Sample Start:___ Sweep In:_____ Sweep Out:_____ Ch. Temp:_____
#_____ Stop:___ Sample Volume:___ Tube/Canister ID:_____
Notes:_____Initials:_____

Site Number:_____ Date:_____ Chamber:_

Purge Start:_____ Sweep In:_____ Sweep Out:_____ Air Temp:___
Sample Start:___ Sweep In:_____ Sweep Out:_____ Ch. Temp:_____
#_____ Stop:___ Sample Volume:___ Tube/Canister ID:_____
Notes:_____Initials:_____
Sample Start:___ Sweep In:_____ Sweep Out:_____ Ch. Temp:_____
#_____ Stop:___ Sample Volume:___ Tube/Canister ID:_____
Notes:_____Initials:_____
Sample Start:___ Sweep In:_____ Sweep Out:_____ Ch. Temp:_____
#_____ Stop:___ Sample Volume:___ Tube/Canister ID:_____
Notes:_____Initials:_____

Site Number:_____ Date:_____ Chamber:_

Purge Start:_____ Sweep In:_____ Sweep Out:_____ Air Temp:___
Sample Start:___ Sweep In:_____ Sweep Out:_____ Ch. Temp:_____
#_____ Stop:___ Sample Volume:___ Tube/Canister ID:_____
Notes:_____Initials:_____
Sample Start:___ Sweep In:_____ Sweep Out:_____ Ch. Temp:_____
#_____ Stop:___ Sample Volume:___ Tube/Canister ID:_____
Notes:_____Initials:_____
Sample Start:___ Sweep In:_____ Sweep Out:_____ Ch. Temp:_____
#_____ Stop:___ Sample Volume:___ Tube/Canister ID:_____
Notes:_____Initials:_____

LLNL Environmental Restoration Department (ERD)
Standard Operating Procedure (SOP)

ERD SOP 1.12: Surface Soil Sampling—Revision: 3

AUTHOR(S):
S. Gregory

APPROVALS: **Date**

Jesse Yow — 4/9/09
Department Manager

Ed Folsom — 4-8-09
Engineering & Operations Division Leader

CONCURRENCE: **Date**

Rebecca Goodrich — 4/9/09
QA Implementation Coordinator

Type of Procedure (per ES&H Manual, Document 3.4)

☒ **Informational Use** ☐ **General Use** ☐ **Continuous Use**

1.0 PURPOSE

The purpose of this SOP is to describe the collection of representative surface soil samples for analysis of chemical, radiological, or physical parameters.

2.0 APPLICABILITY

This procedure is applicable to the development of surface soil sampling plans and the collection of surface soil samples independent of drilling operations, although the techniques described herein are also valid within that context. SOP 1.2, "Borehole Sampling of Unconsolidated Sediments and Rock," describes soil sampling during drilling in detail. Depending on the purpose of the sampling activity, modifications to these procedures can be made on a case-by-case basis and should be documented in a sampling plan. ERD work activities are conducted within the framework of the institutional Integrated Safety Management System (ISMS). The

Environmental Management System (EMS) is a component of the ISMS, which is also supported during the planning, performing, and evaluation of the work processes.

3.0 REFERENCES

3.1 LLNL Environment, Safety and Health Manual.

3.3 Site 300 Site Safety Plan (SSP).

3.4 Livermore Site Safety Plan (SSP).

3.5 U.S. Environmental Protection Agency (1987), *A Compendium of Superfund Field Operations Methods*, EPA/540/P-87/001.

3.6 Webster-Scholten, C. P., Ed. (1994), *Final Site-Wide Remedial Investigation Report, Lawrence Livermore National Laboratory*, Livermore, CA. (UCRL-AR-108131).

4.0 DEFINITIONS

See SOP Glossary.

5.0 RESPONSIBILITIES

5.1 Department Manager

The Department Leader's responsibility is to ensure that all activities performed by ERD at the Livermore Site and Site 300 are performed safely and comply with all pertinent regulations and procedures, and provide the necessary equipment and resources to accomplish the tasks described in this procedure.

5.2 Project Leader (PL)

The PL's responsibility is to ensure that all activities are performed safely and comply with all pertinent regulations and procedures, work is authorized through an Integration Work Sheet (IWS), and there is sufficient funding to initiate the work.

5.3 Engineering and Operations Division Leader (EODL)

The EODL's responsibility is to ensure that proper procedures are followed for activities (e.g., construction, facility operation and sampling).

5.4 Site Safety Officer (SSO)

The SSO's responsibility is to ensure that fieldwork is conducted safely and in compliance with applicable IWSs, Site Safety Plans, SOPs, and any other applicable safety related documentation.

5.5 Task Leader (TL)

The TL or designee is responsible for preparing a surface soil sampling plan per the requirements of this SOP, reviewing the plan with all applicable parties to ensure all roles, responsibilities, and procedures are clear, and providing the plan to DMT for archiving.

5.6 Field Personnel (FP)

The FP's responsibilities are to perform the surface soil sampling activities in accordance with approved SOPs and sampling plans. FP are responsible for packaging, handling, and shipping surface soil samples per SOP 4.2, "Sample Control and Documentation," SOP 4.3, "Sample Containers and Preservation," and SOP 4.4, "Guide to the Handling, Packaging, and Shipping of Samples." The FP are also responsible for obtaining permission to travel offroad, if sampling locations necessitates travelling more than 25 ft off pavement. Refer to SOP 4.1, "General Instruction for Field Personnel."

5.7 Data Management Team (DMT)

The DMT's responsibility is to decode the blind QC sample identification names on the analytical results, and distributing the data to appropriate personnel. DMT is responsible for archiving surface soil sampling plans and approving sample location names.

6.0 PROCEDURE

6.1 Sampling Plan Preparation

The sampling plan is prepared by the TL or designee.

6.1.1 Determine sample locations, including QC samples, and consult with DMT for approved location sample names. Include a map when possible.

6.1.2 Determine sample analyses, DMT analyses codes, container and volume requirements, and analytical laboratory. Consult with the QC Chemist for special analytical needs.

6.1.3 Provide sampling plan to DMT, QC Chemist, and FP for review. Ensure that appropriate sample IDs have been obtained from DMT.

6.2 Field Preparation

6.2.1 Review SOP 4.1, "General Instructions for Field Personnel," and perform applicable preparation activities (i.e., arranging access to sampling areas through building coordinators or Facility Point of Contacts (FPOCs), control point operators, security, or other appropriate personnel) including calibrating and decontaminating field equipment.

6.2.2 Inventory all field equipment listed in the Equipment Checklist (Attachment A) and load into field vehicle.

6.2.3 Initiate obtaining a dig permit at least 30 days prior to sampling event so all underground utilities can be located. Locate and mark all tentative sampling locations on the ground and on a site map. Marking paint can be used to mark the location, but no stakes should be driven into the ground unless a dig permit has already been issued. A copy of the map should be given to the utility locator personnel. After the dig permit has been issued, and all sampling locations have been given the "okay" by the utility locators, a stake can be driven into the location with the proposed sample ID attached to or written onto the stake. All locations identified as not suitable due to underlying utilities should be removed from the sampling plan unless the utility locator has given permission to move the location a certain distance and in a certain direction from the originally proposed location. Work must be initiated within 10 days from the issuance of the dig permit or all locations will have to be reviewed again by the utility locators. The dig permit must be kept at the site during the entire sampling event.

6.2.4 Determine the best sampling order. Sample from the potentially least contaminated area to the potentially most contaminated area whenever possible. If site historical data is unavailable, sample from the areas furthest from site operations, considered background, to areas closest to operations. Ensure that permission for offroad travel has been granted, if applicable, as described above (SOP 4.1, "General Instruction for Field Personnel").

6.3 Surface Soil Sampling Procedure

6.3.1 Insure the dig permit has been obtained and present at the sampling locations during the entire sampling event.

6.3.2 Using a clean trowel, clear an area of vegetation large enough to supply the quantity of soil that will be needed for all analytical requirements. Usually a one ft^2 area is sufficient. Avoid removing the topsoil when scraping off the vegetation.

6.3.3 If samples are to be analyzed for volatile chemical constituents, such as those using analytical methods EPA 8021 or 8260, a sampling device which limits the exposure of the matrix to air should be used if at all possible. The following procedure should be followed:

A. Using a soil sampling device, such as a slide hammer with cup and cap assembly, insert a clean liner into the cup, and drive the cup into the soil within the cleaned area. The cup is driven at a 45° angle to ensure the sampler does not obtain any soil from depths greater that six inches. The cup needs to be driven until it is certain that there is no air space remaining inside the cup assembly. The liner may be composed of either stainless steel or brass depending on the analysis being performed.

B. Retrieve the cup from the ground and remove the liner filled with surface soil being careful not to let any of the soil fall out of the liner. Quickly inspect each end of the liner to ensure the soil extends to the end of the liner. Then place a square of Teflon tape over the end of the tube followed by a plastic end cap. Repeat this for the other end of the tube and secure caps to the liner using duct tape to prevent the caps from falling off during shipment.

C. Label the soil tube with the same identifier used to stake the location. Put sample in an air-tight bag, and place in an ice chest with loose ice to maintain samples at 4°C. Loose ice should be replaced with double bagged ice or blue ice prior to shipment or courier pick-up (SOP 4.4).

D. If it is not possible to use a slide hammer sampling device, samples may be collected by either directly driving a brass tube into the soil by hand or with a hammer, or by tightly packing soil into a glass jar. This should be performed quickly to prevent the loss of VOCs. Label and place on ice as described above.

E. For collection of QC samples, the soil core should be collected adjacent to the original sample and packaged in exactly the same manner for shipment to the analytical laboratory. Refer to SOP 4.9, "Collection of Field QC Samples" for sample ID instructions.

6.3.4 Samples being analyzed for non-volatile chemical constituents or physical characteristics may be collected without concern about the exposure to air. The following procedure should be followed:

A. Using the trowel, chop and stir up the soil within the cleared area down to about 6 inches. It should be thoroughly mixed up to ensure that a representative composite sample of the top 6 inches is obtained.

B. Fill the appropriate number of containers as determined by the analytical method or the sampling plan. A Teflon™ -lined lid or cap should be used to seal the container. If these are not available, Teflon* sheeting may be placed over the top of the container prior to sealing with a conventional cap. The cap should be taped in place to prevent it from coming off during shipment.

C. Label the container as described above. Place the sample in an air-tight bag and in an ice chest as described above to maintain samples at 4°C (SOP 4.4).

D. For collection of QC samples, insure that enough soil is composited in the area to fill the additional QC containers. As described above, the samples should be packaged in the same manner as the routine samples. Refer to SOP 4.9, "Collection of Field QC Samples" for sample ID instructions.

6.3.5 In some situations it may be necessary to composite soil samples from several locations into a single sample for analysis. The following procedure should then be followed:

A. Obtain a pre-cleaned compositing container large enough to hold soil from each of the locations to be composited, along with a pre-cleaned graduated beaker to measure the volume of soil collected from each location.

B. Using the same procedure described above (6.3.4), collect approximately the same volume of soil from each location to be composited and place into compositing container. The volume of soil collected from each location should be such that the final volume is only slightly larger than the final volume needed for the appropriate analyses. For example, if 500 mls of soil are needed for the final sample for analysis, and there are five locations to composite, collect just a little more than 100 mls from each location.

C. Thoroughly mix the soil in the container either by capping the container and vigorously shaking it, or stir the contents using a trowel until sufficiently mixed.

D. Once thoroughly mixed, transfer soil into the appropriate number of containers as determined by the analytical method or the sampling plan and follow steps B through D above.

E. Any soil left over after sample container(s) have been filled should be transferred to a waste container for appropriate disposal.

F. No equipment decontamination is necessary between sample collections when samples are being composited into a single sample. However, all equipment and compositing container do need thorough decontamination (SOP 4.5, "General Equipment Decontamination") prior to collection of the next composite samples.

6.3.6 Record all pertinent information in the document control logbook including sample ID, location description, the number and types of samples collected (SOP 4.2).

6.3.7 Verify that the sampling location and ID has been marked on a topographic site map as accurately as possible. The locations coordinates can either be determined through surveying, a ground positioning system (GPS), or estimated by utilizing the Hot Maps application within the Gemini web tools.

6.3.8 Decontaminate all sampling equipment (SOP 4.5, "General Equipment Decontamination") prior to moving to the next sampling location. Equipment used in background locations and those locations not containing organic contaminants can be decontaminated just by thoroughly rinsing with deionized water and drying with a clean cloth.

6.4 Post Operation

6.4.1 Perform post operation activities described in SOP 4.1.

7.0 QA RECORDS

7.1 Document Control Logbook

7.2 Chain-of-Custody Forms

8.0 ATTACHMENTS

Attachment A—Equipment Checklist

Attachment A

Equipment Checklist

Equipment Checklist

_____ Air-tight plastic bags
_____ Alconox (detergent)
_____ Appropriate documents (e.g., Sampling Plan, SOPs, QAPP, Site Safety Plan)
_____ Backpack
_____ Brushes
_____ Compositing container
_____ De-ionized water
_____ Disposable towels
_____ Fluorescent marker tape
_____ Gloves (leather, vinyl, and/or Nytrile)
_____ Graduated beaker
_____ Ice chest and ice
_____ Logbook
_____ Maps
_____ Permanent ink markers
_____ Portable 2-way radio
_____ Sample containers
_____ Shovel
_____ Sledge hammer
_____ Stakes
_____ Trash bags
_____ Trowel
_____ Split spoon sampler and slide hammer
_____ Snake chaps
_____ FID or PID or other appropriate monitoring devices
_____ Appropriate attire (e.g., coveralls, hat, etc.)
_____ Drinking water

LLNL Environmental Restoration Division (ERD)
Standard Operating Procedure (SOP)

ERD SOP 1.13: Operation of the AMS TR7000 Well Management System —Revision: 0

AUTHOR(S):
R. Goodrich

APPROVALS:	Date
Jesse Lyon Division Leader	8/30/06
Hydrogeology & Decision Support Group Leader	8/10/06

CONCURRENCE:	Date
Rebecca Goodrich QA Implementation Coordinator	8/10/06

1.0 PURPOSE

The purpose of this procedure is to provide general operating instructions for the Art's Manufacturing & Supply (AMS) TR7000 Well Management System used to perform work activities such as baseline sampling and hydraulic testing.

2.0 APPLICABILITY

ERD work activities are conducted within the framework of the institutional Integrated Safety Management System (ISMS). The Environmental Management System (EMS) is a component of the ISMS, which is also supported during the planning, performing, and evaluation of the work processes. This procedure is applicable to the safe and consistent operation of the AMS TR7000 Well Management System when performing baseline sampling and hydraulic testing applications.

3.0 REFERENCES

3.1 Art's Manufacturing & Supply (AMS) Well Management System Owner's Manual

4.0 DEFINITIONS

Not applicable.

5.0 RESPONSIBILITIES

5.1 Division Leader (DL)

The DL's responsibility is to ensure that all activities performed by ERD at the Livermore Site and Site 300 are performed safely and comply with all pertinent regulations and procedures, and provide the necessary equipment and resources to accomplish the tasks described in this procedure.

5.2 Project Leader (PL)

The PL's responsibility is to ensure that all activities are performed safely and comply with all pertinent regulations and procedures, work is authorized through an IWS, and there is sufficient funding to initiate the work.

5.3 Hydrogeology & Decision Support Group Leader (HDSGL)

The HDSGL's responsibility is to ensure that work activities are performed safely, consistently, and adequately when using described equipment according to procedures specified.

5.4 Site Safety Officer (SSO)

The SSO's responsibility is to ensure that fieldwork is conducted safely and in compliance with applicable IWSs, Site Safety Plans, SOPs, and any other applicable safety related documentation.

5.5 Field Personnel

The field personnel's responsibility is to operate equipment safely and in a manner consistent with operating instructions provided when conducting work activities such as baseline sampling and hydraulic testing.

5.6 Date Management Team (DMT)

The DMT is responsible for the disposition of the original documents received as a result of performing work activities described by this SOP.

6.0 PROCEDURES

The AMS TR7000 Well Management System is used to perform work activities such as baseline sampling and hydraulic testing. The AMS TR7000 Well Management System consists of a sampling trailer that is used to support a hydraulically operated boom. The boom is safely

positioned over a ground water monitoring well and used to lower a purging devise such as an electric submersible pump into the well to conduct sampling and pumping activities.

6.1 Preparation

6.1.1 Prior to conducting work, perform the applicable preparation activities described in SOP 4.1, "General Instructions for Field Personnel". Personnel who are new to the LLNL project will receive direct field supervision and on-the-job training (OJT) from a Subject Matter Expert (SME) for at least the first 24 hours of field activity using the ERD Field Investigation Orientation Lesson Plan (course number EP7033-05).

6.2 Safety Considerations

6.2.1 The AMS TR7000 Well Management System consists of moving parts, some which are exposed and pose a safety concern to operators who are unfamiliar with the system. It is necessary that the operator be aware of the potential dangers associated with operating the equipment and constantly be on guard to prevent any unnecessary accidents. General operating instructions are provided in this procedure and a list of precautionary measures that should be reviewed prior to operating the equipment and adhered to during equipment operation.

6.2.2 Work is to be performed in accordance with the LLNL Site Safety Plans, the Quality Assurance Project Plan (QAPP), applicable ERD SOPs, and ERD Integration Work Sheets (IWS). Work activities described by this SOP shall be performed in accordance with IWS 12545 "Operation of the AMS TR7000 Well Management System" and IWS 11577 "Compliance Driven Ground Water Sampling and Water Level Measurements" at the Livermore Site. The AMS TR7000 Well Management System is typically not used at Site 300 due to the uneven topography.

6.3 Prior to Operating the AMS TR7000 Well Management System

Review this SOP thoroughly, paying special attention to the potential hazards associated with operating the AMS TR7000 Well Management Sampling System. The instructions provided are general instructions and are not meant to be inclusive. Emphasis on operating the equipment safely is the main focus of the SOP. If further information is needed prior to operating the equipment, please refer to the operator's manual or call the manufacturer. The Operator's Manual is retained on the AMS Sampling System at all times.

6.3.1 Precautionary Measures to Prevent Damage to Equipment

- Do not allow the AMS TR7000 Well Management System to operate unattended.
- When extending the boom, unwind enough hose so that the hose will not be stretched as the boom is being extended. Stretching the hose could result in damage to the hose, internal wiring or separation of the hose from its fitting.

- Leave two wraps of hose or cable on the spools when nearing the end of a hose or cable to prevent damage to the spool or loss of hose/cable and any connected apparatus.
- To prevent damage to any moveable parts, make sure the parts are not anchored or attached to other components before activating the system.

6.4 Control Panel

6.4.1 The control panel is divided into three sections. A high voltage area that contains mostly circuit breakers and the main switch to turn the hot pressure washer on and off is located on the left side of the Control Panel. To the right of the high voltage section is the submersible pump converter. On the left most end is the low voltage portion of the control panel. The low voltage end of the panel is where the majority of the controls for the TR7000 are located. A brief description of each of the components follows:

- **Main Circuit Breaker**: must be in the on position for any of the circuity to be energized. When starting the generator, the main circuit breaker needs to be in the **OFF** position.
- **Hydraulic Pump Breaker**: protects the hydraulic pump circuit from over current. It must be turned on to activate any components that require hydraulic power to operate.
- **Grundfos Converter Breaker**: protects the submersible pump converter from too much current and must also be turned on if the submersible pump is to be used.
- **Pressure Washer Breaker:** protects the hot water pressure washer from electrical damage if an over current condition occurs. It must be turned on for any of the decontamination functions to operate.
- **Decon System Breaker:** protects the solenoid valve that allows pressurized water to the decon box on the boom.
- **Convenience Outlet Breaker:** must be turned on to use the convenience outlets located at the rear of the AMS TR7000.
- **Pressure Washer Control**: turns the pressure washer pump and burner on.
- **Grundfos Converter Box:** controls the output of the submersible pump.
- **Decon On/Off:** open and close the primary switch that allows water to the Decon box mounted on the boom of the AMS TR7000. A secondary switch in the Pendant must also be closed for the decon box to be pressurized with fluid.
- **Hydraulic Pump On/Off:** push buttons turn the hydraulic pump on and off which is indicated by illumination of a red (off) or green (on) button.
- **Transfer Pump On/Off:** push buttons turn a hydraulic driven transfer pump on (indicated by an illuminated green light) and off (indicated by an

illuminated red light) which moves water in the Decon Tray to the Gray Water holding tank.

- **Emergency Stop:** considered to be the most important control on the entire AMS TR7000 Well Management System. PUSH THE EMERGENCY STOP BUTTON IN to shut down if an emergency should occur.
- **Hour Meter:** records the amount of hours that the TR7000 has been used.
- **12-V Switch:** turns on the power supply to the low voltage side of the control panel. It must be turned on for any of the TR7000 systems to work.
- **Oil Temperature Gauge**: monitors the oil temperature. If the temperature exceeds 150 degrees, the AMS TR7000 Well Management System should be shut down.
- **Pendant Receptacle:** is where the Pendant is plugged into the control panel. The Pendant on/off switch should be turned **OFF** before inserting the Pendant into the Control Panel.
- **Bypass:** is used when starting the hydraulic pump. The Bypass should be turned on when starting the hydraulic pump to prevent overloading of the electric motor that activates the pump.
- **Circuit Breaker**: a set of low-voltage circuit breakers that protects the low voltage components of the control panel. They are labeled to indicate which circuits they protect.
- **Pendant:** controls all the functions of the boom. All of the functions are appropriately labeled. The Pendant plugs into the Pendant Receptacle.

6.5 Operating the AMS TR7000 Well Management System

Follow the AMS TR7000 Well Management System Order of Operation (Attachment A) when operating the system.

A. Positioning the Trailer: The AMS Sampling System Trailer should be positioned so that the end of the boom can be located directly over the monitoring well or body of fluid to be sampled. It is recommended for most applications, that the trailer be positioned so that the monitor well is located on the driver's side of the towing vehicle. The mast should be even with the monitor well and the side of the trailer should be approximately five feet from the wellhead. Before raising the boom, ensure that the boom is not at an angle of less than 45 degrees or more than 70 degrees off of the horizontal. Once the trailer has been safely positioned, set the emergency brake and engage any holding or safety devices before operating the boom system.

Begin Operation

B. Starting the Generator: Start the generator according to the manufacturer's instructions included in the AMS TR7000 Well Management System Manual. Once the generator is started, the main power switch needs to be turned "On" or

the main power button needs to be pressed. After the "On" button has been pressed, the voltmeter on the control panel should read 120V or 140V. If the reading is low, check to ensure that the motor is throttled to operate at the correct revolutions per minute.

C. **The Main Circuit Breaker** located on the main control panel should be moved to the "On" position. Make sure all circuit breakers are also in the "On" position. The main control panel is located in one of the tool compartments on the driver's side.

D. **Turn the Hydraulic Pump on** and allow it to run for a few minutes to warm-up.

E. **Plug the Pendant into the Pendant Receptacle** and turn on the 12-Volt power on. Turn the Pendant power on and using the Pendant, position the boom over the wellhead. Lower the submersible pump into the well to the desired depth. Turn Bypass off, then turn hydraulic pump off.

F. **Connect Discharge Hose** to the cam-lock fitting on the discharge located on the end of the hose spool. Direct the discharge hose to a suitable container for purging the well being sampled. Start Redi-Flow, adjust flow rate. Purge the well according to the converter instructions provided in the owner's manual. Back-off Redi-Flow to stop pump.

Ending Operation

G. **Following sample collection or hydraulic testing**; turn hydraulic pump on, then turn Bypass switch on, retrieve pump from well and properly wind the hose back onto the spool to prevent damage to the hose ensuring there is enough spool capacity for the hose. Use the Levelwind to help guide the hose onto the spool.

H. **Use the Decon System** to rinse the hose as it is wound back onto the spool. To activate the system, make sure that the Pressure Washer and all decon switches are turned on. When using decon capabilities of the AMS TR7000 it is necessary to transfer the gray water into the gray water storage tank. This is easily accomplished by turning the transfer pump "On."

Power Down

I. **Once the hose is wound back onto its spool,** return the boom to transport position using the pendant. Park pump in holder. Turn all of the 12-V components and power off. Turn the hydraulic pump and any remaining components off. Disconnect the Pendant and store it to prevent damage during transport.

J. **Turn the generator off** and empty the gray water tank into a proper receptacle by opening the valve located on the driver's side of the trailer.

6.6 Maintenance of the AMS Sampling System

6.6.1 The AMS Sampling System requires minimal maintenance. The following activities should be performed daily prior to using the equipment:

- Check the condition of all sheaves and replace if necessary.
- Check condition of hoses and replace as necessary.
- Check condition of all pins and set screws; replace or tighten if necessary.
- Check hydraulic oil level and fill with Conoco hydraulic oil no. 46 when needed. To check oil level, remove the cap on the hydraulic tank. The oil level should be within ½ inch from the opening**.**

6.6.2 The following activities should be performed monthly prior to operation:

- Grease the fittings that are located on the top and bottom of the boom frame.
- Grease the fittings that are located on the level wind sheave bracket assembly.
- Perform any daily service as outlined above.

Maintenance of any of the components supplied by outside manufacturers such as the generator or pressure washer should be serviced according to the manufacturer's recommendations. The manufacture's maintenance recommendations are included in the AMS TR7000 Well Management System Owner's Manual.

6.7 Post Operation

6.7.1 Perform post-work activities described in SOP 4.1, Section 6.4.

6.7.2 Return the site to its original condition using best reasonable efforts.

6.7.3 Deliver all original documentation to the DMT.

7.0 QUALITY ASSURANCE RECORDS

7.1 Document Control Logbooks

7.2 Ground Water Sampling Data Sheets

8.0 ATTACHMENTS

Attachment A—AMS TR7000 Order of Operation Checklist

Attachment A

AMS TR7000 Order of Operation Checklist

TR 7000
Order of Operation

BEGIN OPERATION:

(1) MAIN BREAKER IN OFF POSITION
(2) PLUG IN PENDANT CONTROL BOX
(3) POWER UP GENERATOR
(4) TURN ON MAIN POWER BREAKER
(5) TURN ON HYDRAULIC PUMP
(6) TURN BYPASS SWITCH TO ON
(7) TURN PENDANT ON
(8) LOWER PUMP TO SPECIFIED DEPTH
(9) TURN BYPASS OFF
(10) TURN HYDRAULIC PUMP OFF
(11) START REDI-FLOW, ADJUST FLOW RATE

ENDING OPERATION:

(1) BACK OFF REDI-FLOW TO STOP PUMP
(2) TURN HYDRAULIC PUMP ON
(3) TURN BYPASS SWITCH TO ON
(4) (OPTIONAL) TURN ON DECON SWITCH
(5) (OPTIONAL) TURN ON DECON SWITCH (*)
(6) RETRIEVE PUMP FROM WELL
(7) PARK PUMP IN HOLDER
(8) TURN OFF DECON SWITCH (*)

POWER DOWN:

(1) TURN BYPASS OFF
(2) TURN HYDRAULIC OFF
(3) TURN PENDANT OFF
(4) TURN GENERATOR OFF
(*)= SWITCH ON PENDANT CONTROL BOX

LLNL Environmental Restoration Division (ERD)
Standard Operating Procedure (SOP)

ERD SOP 1.14: Final Well Development/Specific Capacity Tests at LLNL Livermore Site and Site 300—Revision: 2

AUTHOR(S):
J. Karachewski*

APPROVALS:	Date
Jesse Yow Division Leader	8/30/06
Hydrogeology & Decision Support Group Leader	8/15/06
CONCURRENCE:	**Date**
Rebecca Goodrich QA Implementation Coordinator	8/15/06

*Weiss Associates

1.0 PURPOSE

The purpose of this SOP is to document field activities for final well development and specific capacity tests. Final well development and specific capacity tests are performed after the drill rig has completed its initial development. The AMS-TR7000 is used at the Livermore Site to conduct well development following SOP 1.13: Operation of the AMS TR7000 Well Management System. At Site 300, well development is performed after a pump has been installed in a newly completed well. Well development involves overpumping and intermittent pumping of the well in order to clear residual drilling mud and remaining fines (silt and clay) from the sand pack and well. During the well development process data is obtained for estimating the specific capacity, maximum flow rate, and optimum flow rate for subsequent hydraulic testing. This final well development takes place prior to hydraulic testing and collection of the baseline ground water samples. Baseline samples are collected for an expanded list of analyses following procedures specified in SOP 2.1: Pre-sample Purging of Wells.

2.0 APPLICABILITY

The purpose of final well development and specific capacity tests is to obtain representative samples of turbid-free ground water, collect accurate water-level data, and determine maximum and optimum flow rates. These factors will ensure:

1. Selection of a purging device appropriate for the hydraulic characteristics of a well.
2. The purging device is not damaged by fine-grained sediments during subsequent sampling or hydraulic testing.

ERD work activities are conducted within the framework of the institutional Integrated Safety Management System (ISMS). The Environmental Management System (EMS) is a component of the ISMS, which is also supported during the planning, performing, and evaluation of the work processes.

3.0 REFERENCES

3.1 Gass, Tyler E., "Monitor Well Development," *Water Well J.*, January 1986, pp. 52–55.

3.2 Barcelona, M. J., Gibb, J. P., Helfrich, J. A., and Garske, E. E., *Practical Guide to Ground Water Sampling*, U.S. Government Printing Office, EPA 600/2-85-104, 1985.

3.3 Driscoll, F. G., Groundwater and Wells, Second Edition, Johnson Division, St. Paul, MN, 1089 pp, 1986.

4.0 DEFINITIONS

See SOP Glossary.

5.0 RESPONSIBILITIES

5.1 Division Leader (DL)

The DL's responsibility is to ensure that all activities performed by ERD at the Livermore Site and Site 300 are performed safely, comply with all pertinent regulations and procedures, and provide the necessary equipment and resources to accomplish the tasks described in this procedure.

5.2 Project Leader (PL)

The PL's responsibility is to ensure that all activities are performed safely and comply with all pertinent regulations and procedures, work is authorized through an IWS, and there is sufficient funding to initiate the work.

5.3 Hydrogeology & Decision Support Group Leader (HDSGL)

The HDSGL's responsibility is to ensure that proper procedures are followed for activities (e.g., drilling, borehole logging and sampling, well installation and development).

5.4 Hydrogeologist (HG)

The HG is responsible for determining borehole locations and well design, hydrostratigraphic unit (HSU) analysis, and planning/evaluation of hydraulic tests.

5.5 Site Safety Officer (SSO)

The SSO is responsible for ensuring the safety of ERD's ongoing operations, fieldwork, and facilities and that the work being performed is covered by an authorized IWS.

5.6 Field Personnel (FP)

The FP's responsibilities are to properly develop wells to obtain the maximum yield and the highest quality ground water samples in compliance with all established operational and safety procedures, and to inform the HDSGL when the procedures are inappropriate. Field personnel are also responsible for (1) communicating the performance of development activities to the Hydrogeologist (HG) and recommending modifications of field methods to improve well yield, and (2) notifying the sampling coordinator that final well development is completed.

5.7 Data Management Team (DMT)

Once well development is complete, DMT will add the well to the Routine Ground Water Sampling Schedule for baseline sampling. The DMT is responsible for the disposition of the original documents received as a result of performing work activities described by this SOP.

6.0 PROCEDURES

6.1 Preparation

6.1.1. Prior to conducting work, perform the applicable preparation activities described in SOP 4.1, "General Instructions for Field Personnel." Personnel who are new to the LLNL project will receive direct field supervision and on-the-job training (OJT) from a Subject Matter Expert (SME) for at least the first 24 hours of field activity using the ERD Field Investigation Orientation Lesson Plan (course number EP7033-05).

6.1.2 The FP should check with the HG to obtain information on well design and estimated flow rate in order to determine the appropriate number of portable tanks or collection drums. The FP coordinates the use of portable tanks and associated equipment and reviews the equipment checklist (Attachment A) to obtain necessary supplies.

6.1.2 The FP reviews the ground water sampling requirements with the HG before the final well development is complete.

6.2 Safety Considerations

6.2.1 The procedures described in the following sections will be conducted in accordance with LLNL IWS 12545 "Operation of the AMS TR7000 Well Management System," IWS 11577 "Compliance Driven Ground Water Sampling

and Water Level Measurements," and IWS 11343 "IWS-621 ERD-0004 Routine Ground Water Sampling and Water Level Monitoring."

6.3 Procedures

6.3.1 Wells with Electric Submersible Pumps

A. Connect a discharge line from pump to flow meter.

B. Check to make sure the extension cord's on/off switch box is "off." Plug extension cord with Ground-Fault Interrupter (GFI) from generator into well control box.

C. Obtain the depth-to-water (DTW) measurement. Record corresponding time.

D. Turn on generator, followed by the pump. Record time (t) on the well development field sheet (Attachment B) and baseline sampling data sheet (Attachment C).

E. Measure flow rate (Q) with a 5-gal bucket by reading the flow meter totalizer and determining the time it takes for 10 gallons to flow into the portable tank or collection drum(s).

F. Note color, odor, amount, and type of sediment (e.g., clay, silt, sand) in the water. Note changes in these parameters as pumping proceeds.

G. Obtain Q and DTW measurements every 5–10 min for the first 30 min.

H. After 30 min record DTW. Determine "specific capacity" = $Q/\Delta s$ at $t = 30$, where Q = flow rate and Δs = (DTW at $t = 30$) minus (DTW at $t = 0$).

I. Shut off pump, note and record time, and allow the water level to recover. Periodically, record DTW and times as recovery is occurring. The frequency of measurements will depend on the rate of water level recovery in the well. For wells with flow rates greater than 1 gpm, measure the depth to water every couple of minutes for the first 15 minutes and then every 10 minutes thereafter until the water level recovers to approximately 90% of the original reading. For wells with flow rates less than 1 gpm, measure the depth to water every five minutes for the first half hour and then every two hours.

J. Estimate optimum Q for a subsequent 1-hr drawdown test, i.e., the Q that will maximize drawdown, but not daylight a pressure transducer after 60 minutes of continuous pumping.

Note: It is more desirable to pump at a lower Q and obtain a steady-state pumping level in 45–60 min, than to have the water level continue to draw down after 45–60 min. The former procedure produces a better data curve when the drawdown test data points are plotted.

K. Pump well intermittently for at least 2 hr. Maximize drawdown but do not daylight pump intake.

Example:

Pump on—30 min

Pump off—5 min

Pump on—15 min

Pump off—5 min, etc.

The suggested periods for a high yielding well (high flow rates) are listed in the above example. For low-yielding wells, shorten the pumping period from 30 to 10 minutes, allow water levels to recover, and attempt to remove at least 3 casing volumes of water. If the well is pumped dry, allow the water levels to recover overnight before repeating these steps. The purpose is to surge the well and over pump it to remove fine sediment and stabilize the well's sand pack.

Note: Always record the time and DTW when the pump is turned on or off.

L. Final development is complete when:

1. Water is clear and free of sediment.

2. For a high-yielding well, calculate Δs for three or more flow rates. In contrast, for a low-yielding well calculate Δs for two flow rates, if possible.

M. Collect ground water sample per SOP 2.6, "Sampling for Volatile Organic Compounds." When sampling low-yielding monitor wells, follow procedures outlined in SOP 2.7, "Pre-sample Purging and Sampling of Low-Yielding Monitor Wells."

6.3.2 Wells with Bladder Pumps

A. Connect bladder pump air line to the Well Wizard controller pump supply line. Connect Well Wizard air compressor supply line to Well Wizard controller air pressure inlet. All necessary hoses are stored in Well Wizard controller case.

B. Place discharge line in portable tank or collection drum(s).

C. Record DTW and time.

D. Start the Well Wizard's air compressor and pump. Record time (t).

E. Measure and record flow rate (Q) with a 5-gal bucket.

F. Note the color, odor, type, and amount of sediment in water. Record any changes in these parameters as pumping proceeds.

G. Record Q and DTW measurements as often as practical.

H. At t = 30 (30 min. after "pump on") record DTW. Determine "specific capacity" (see Section 6.3.1, Step H).

Note: Because flow is not constant, specific capacity is not as accurate but can be useful.

I. Pump well intermittently for at least 2 hr until water is clear. Continue recording Q and DTW.

Note: Because most wells with bladder pumps have a sustainable yield <1 gpm, a slug test may be necessary to determine hydraulic properties (see SOP 3.3 Hydraulic Testing [Slug/Bail]).

J. Collect ground water samples per SOP 2.6 or SOP 2.7 when sampling a low-yielding monitor well.

6.3.3 Important Information Recorded After Final Well Development

- Specific capacity.
- Total pumping time (i.e., excluding recovery periods).
- Total gallons pumped.
- Optimum sustainable Q for drawdown tests.
- Maximum Q.
- Water clarity, odor, flow rate, etc.

Important: When final well development is completed, inform the Sampling Coordinator and provide them with an optimum Q for sampling.

6.4 Post Operation

6.4.1 Perform post operation activities as described in SOP 4.1, "General Instructions for Field Personnel."

6.4.2 Decontaminate all equipment per SOP 4.5, "General Equipment Decontamination."

6.4.3 Prior to disposal, store containers of water produced during development in a secure area until water is treated.

6.4.4 After review, give the original Ground Water Sampling Data sheets to the DMT. The final well development data is being electronically stored by the HDSG.

7.0 QUALITY ASSURANCE RECORDS

7.1 Final Well Development Field Sheet

7.2 LLNL Ground Water Sampling Data Sheet

8.0 ATTACHMENTS

Attachment A—Equipment Checklist

Attachment B—Final Well Development Field Sheet

Attachment C—LLNL Baseline Sampling Data Sheet

Attachment A

Equipment Checklist

Equipment Checklist

All wells:

____ Water-level probe/engineer's tape graduated in hundreths of a ft
____ 5-gal bucket
____ Watch with stopwatch capabilities
____ Calculator, clipboard, pencil
____ Well development forms

Wells with electric submersible pumps:

____ 230-volt generator
____ Black extension cord with GFI and on/off switch box. Note: different generators require extension cords—make sure the cord and generator are compatible
____ Pump control box (must match voltage and horsepower of pump)
____ PVC fittings (elbows, unions, etc.)
____ Hoses
____ Tool box (with wrenches, hose fittings, Teflon tape)

Wells with bladder (Well Wizard) pumps:

____ Well Wizard control box with air compressor

Attachment B

Final Well Development Field Sheet

Environmental Restoration Division

FINAL WELL DEVELOPMENT FIELD SHEET

Site	☐ Livermore Site ☐ Site 300	Page of	By: Billy Clark
Well ID		Location/Area	
Date			
Development Method(s): Multiple pumping/over pumping events with variable rate.			
Screened Interval (ft bgs):		Well Diameter (in):	
Depth to Water Before Development (ft bmp):		Sounded Depth (ft bmp):	
Development Equipment (AMS, Pump, Bail):		Pump Intake Depth (ft bmp):	

Clock Time	Depth to Water (ft)	Gallons Pumped	Flow Rate (gpm)	Comments (method, pump on/off, water clarity, odor, sounded depth)

Well Development Summary						
Total Number of Pumping Events and Rates:						
Specific Capacity (Q/Δh) for each Event:						
Total Pumping Time (min):		Total Volume Extracted (gals):				
Total Volume of Water Injected (gals):						
Estimated Sustainable Yield (gpm):						
Qualitative Description of Well Yield (Poor <1 gpm, Fair 1-5 gpm, Good 5-15 gpm, High >15 gpm):						

bgs - below ground surface
bmp - below measurement point

Attachment B. Final Well Development Field Sheet.

Attachment C

LLNL Baseline Sampling Data Sheet

LLNL Baseline Sampling Data **2001**

Monitor Well: _____ Well ID: _____

Date: _____ Extraction Well: _____

CoC #: _____

Purging Device: *AMS/ ES / RF / BP / PB / OTHER

Dedicated / Portable

Casing Diameter/gal./ft

2"	3.5"	4.5"	5"	6"	8"
.163	5	.826	1.02	1.47	2.61

Depth of Casing: _____ P.O.M = _____

Depth to Water: _____ S.I: _____ Casing Volume (gal.): _____

Water Column (ft) _____ Intake: _____ Initial Flow Rate (gpm): _____

Time Pump On: _____ Measured by: graduated cylinder /flow meter/other

Time Pump Off: _____ Treatment Facility: _____

Min.	Time	GPM	Gal.	Volumes	pH	Temp C	SC	OG	Depth to Water
	Well Sustains: gpm								

Meter	Serial #	Calibrated
pH	_____	yes/no
S.C.	_____	yes/no
H_2O	_____	yes/no
Other	_____	

Project: Livermore Site - LGIV

Analytical Lab (1)

Analytical Lab (2)

Samplers Initials/Employer:

Sample ID: _____ Time: _____

QC Sample ID: _____ Time: _____

Requested Analyses

VOCs, Metals, Etc.

- O E602/ __ x 40 ml VOAs/0 preservatives (pres.)
- O E624/ __ x 40 mL VOAs/0 pres.
- O GENMIN/2 x 1 L, plastic
- O NPDESMETALS/1 x 1 L plastic
- O E218.4B/1 x 500 ml, plastic
- O Other: _____

Rad

- O E906/ 4 x 40 ml glass/0 pres.
- O E900/2 x 1 L plastic
- O E903+904/2 x 1 L plastic
- O E913.0/ __ x 250 ml glass
- O AS:UISO/ __ x 1 L plastic
- O Other: _____

*EP = EasyPump, ES = electric submersible, RF = RediFlo, BP = bladder pump, PB = Poly bailer

Attachment C. LLNL Baseline Sampling Data Sheet.

LLNL Environmental Restoration Division (ERD)
Standard Operating Procedure (SOP)

ERD SOP 1.15: Well Site Core Handling—Revision: 2

AUTHOR(S):
J. Karachewski*, R. Davis*

ENVIRONMENTAL RESTORATION DIVISION
CONTROLLED COPY
28
THIS IS A RED STAMP
ERD

APPROVALS: **Date**

Jesse Karachewski 8/30/06
Division Leader

Fred Huff 4/12/06
Hydrogeology & Decision Support Group Leader

CONCURRENCE: **Date**

Rebecca Goodrich 8/3/06
QA Implementation Coordinator

*Weiss Associates

1.0 PURPOSE

The purpose of this SOP procedure is to describe a method for collecting, handling, labeling, and storing cores of sediment or rock obtained during drilling activities.

2.0 APPLICABILITY

This SOP applies to all Lawrence Livermore National Laboratory (LLNL) and contractor personnel assigned to handle core obtained during drilling of boreholes in support of the Environmental Restoration Division (ERD) projects. ERD work activities are conducted within the framework of the institutional Integrated Safety Management System (ISMS). The Environmental Management System (EMS) is a component of the ISMS, which is also supported during the planning, performing, and evaluation of the work processes.

3.0 REFERENCES

3.1 Dibley, V. (1999), *Quality Assurance Project Plan LLNL Ground Water Project* (UCRL-AR-103160 Rev. 2).

4.0 DEFINITIONS

See SOP Glossary.

5.0 RESPONSIBILITIES

5.1 Division Leader (DL)

The DL is responsible for ensuring that all activities performed by ERD at the Livermore Site and Site 300 are performed safely and comply with all pertinent regulations and procedures. The DL is also responsible for providing the resources and necessary equipment required to accomplish the tasks described in this procedure.

5.2 Project Leader (PL)

The PL's responsibility is to ensure that all activities are performed safely and comply with all pertinent regulations and procedures, work is authorized through an IWS, institution requirements of the Findings and Determination are followed, and there is sufficient funding to initiate the work.

5.3 Hydrogeology & Decision Support Group Leader (HDSGL)

The HDSGL's responsiblility is to ensure that proper procedures are implemented for field activities (e.g., drilling, borehole logging and sampling, well installation and development) and to oversee the disposal of investigation-derived wastes.

5.4 Hydrogeologist (HG)

The HG is responsible for determining borehole locations and well design, hydrostratigraphic unit (HSU) analysis, and planning/evaluation of hydraulic tests.

5.5 Site Safety Officer (SSO)

The SSO's responsibility is to ensure that fieldwork is conducted safely and in compliance with applicable IWSs, Site Safety Plans, SOPs, and any other applicable safety related documentation.

5.6 Drilling Coordinator (DC)

The DC provides the interface between the DGS, HG, and the field personnel and is responsible for coordinating the drilling activities with the DG. The DC provides core boxes to the DG that are of the appropriate size and construction for the core that is to be generated.

5.7 Drilling Geologist Supervisor (DGS)

The DGS coordinates the geologist schedules and related activities, equipment needs, and the progress of daily activities. The DGS ensures that the Drilling Geologist (DG) uses the appropriate procedures for handling, describing, and boxing core samples.

5.8 Drilling Geologist (DG)

The DG is responsible for overseeing drilling activities and for conducting borehole logging per established operational and safety procedures and to inform the DC and HG of any nonconformances. The DG observes core collection, prepares detailed descriptions of any soil or rock recovered, and places the recovered material into an appropriately labeled core box according to the instructions provided by this SOP.

5.9 Core Librarian (CL)

The CL is responsible for ensuring that the core boxes are stored and maintained properly at the storage facility. The CL also updates the database to include new material.

6.0 PROCEDURES

6.1 Safety Considerations

To ensure safety to the workers and the environment, the procedures described in the following sections will be conducted in accordance with LLNL Integration Work Sheet (IWS) 12614 "Core Library Activity and Use".

6.2 General

The HG determines the borehole location, drilling procedures, total depth, sample intervals, and prepares or reviews the Drilling Plan and Sampling Plan prior to the start of field activities. The Drilling Plan and Sampling Plan may be prepared for each borehole or a single plan may be prepared for a group of similar boreholes.

The DG must be present at the drill rig while coring is in progress. The DG observes all handling of the core by the drill crew, prepares a lithology log, documents sampling and analysis information, and oversees well site activities. As specified by the Drilling Plan and Sampling Plan, the DG collects core samples at specific intervals for purposes of chemical analyses and/or physical testing, and makes lithologic core descriptions, as well as estimates of hydrogeologic properties.

6.3 Supplies

Attachment A shows the boxes (top and bottom) and dividers required at the well site for proper core handling. The DG should keep track of supplies and field forms and replenish them as necessary according to the Drilling Geologist Equipment Checklist in SOP 1.1: "Field Borehole Logging".

6.4 Core Transfer

After each core run, the drill crew retrieves the core barrel or split-barrel sampling tube from the borehole. The core barrel or split-barrel sampling tube is disassembled so the core can be examined.

6.4.1 The DG must observe the core as it is being removed from the core tube or split inner barrel. The core should be extruded in continuous motion from the core barrel or split-inner barrel into a polyvinyl chloride (PVC) tray, unless otherwise instructed per Drilling Work Plan and/or Sampling Plan or the HG.

6.4.2 The DG is responsible for ensuring that the core remains in the correct stratigraphic position.

6.5 Core Handling

The DG should measure the length of core recovered in the PVC tray prior to further transport or handling. Next, the DG should collect the samples specified in the Drilling Plan and/or Sampling Plan. The DG then transfers the core from the PVC tray to core boxes. Care must be taken to maintain the proper stratigraphic position of the core pieces. If the core is larger in diameter than the core box, then the core may be split along the vertical axis and placed in the core box. The uppermost piece of core is put at the top left corner of the core box, and the rest of the core box sections are filled from left to right with core, working downhole, as in reading across a page of text (Attachment A).

6.6 Core Measurement and Labeling

Core measurements are made to the nearest 0.1 ft. Depths should be verified with the driller. Conventionally, all core and/or sample loss is assumed from the end of the run. If the DG determines that the next run contains material dropped from the preceding run, it may be credited to the preceding run and the amount of recovery and the Rock Quality Designation (RQD) properties must be adjusted as required.

6.6.1 Core runs

The DG is responsible for writing the following information on the side dividers inside of each core box:

- At the start of each run, indicate the depth on the divider.
- Indicate at least two depths for each divider.
- Indicate depth intervals where samples were collected for analysis.
- At the end of each run, indicate the depth.

6.6.2 Spacers

The DG is responsible for marking the dividers and identifying intervals with little or no core recovery or intervals of core removed for chemical analyses and/or physical testing. In addition, the use of spacers, such as plastic end caps, is recommended to physically mark the missing core intervals.

If the ends of the core sample are angled, the depth is measured from approximately the middle of the angled extension. The sample depth interval is also recorded on a spacer placed in the core box and on the divider at the appropriate location.

Note: A black permanent marker should be used for writing on core boxes and dividers.

6.7 Final Preparation of Core Box

Final preparation includes filling the core box and checking the labels.

6.7.1 Core from one or more core runs may be placed in a box. Ensure that the start and stop depths of each core run, intervals of no recovery, and sample depths are recorded on the inside dividers.

6.7.2 Label information is written on both ends of the core box with a black permanent marker. The label records the borehole designation and the depths of the upper and lower core ends in the box. If waxed cardboard boxes are used, this information is added directly to the end of the box lid. In addition, ensure that the borehole ID is written inside the box lid and on the box.

6.7.3 As core boxes are filled and labeled, stack them in a convenient area at the drill site.

6.7.4 When the borehole is finished, a marker block is placed at the end of the last run that is marked with the drill hole designation, the total depth of the hole, and the letters "TD".

6.7.5 The DG is responsible for moving the core to the designated storage facility and covering the material to protect it from the elements.

6.8 Drilling and Sampling Plan

The Drilling and/or Sampling Plan specifies the intervals from which core is to be collected. This document also lists any special requirements for sample collection, preservation, or analysis.

6.9 Other Duties

Other well site duties may be assigned to the DG, depending on the needs of the HG. These may include collecting additional samples or core tests, photographing the core, completing additional forms or daily communication with project personnel. These duties, if assigned, will be described in the Drilling Plan and Sampling Plan. These procedures are described in the drilling and sampling SOPs.

6.10 On-the-Job-Training (OJT)

Newly hired personnel will receive On the Job Training (OJT) under the supervision of a qualified LLNL technical supervisor or his/her designee. The period spent in OJT shall include core labeling, handling, and storage procedures as well as requirements for preparing lithologic logs and other LLNL documentation and forms.

6.11 Communication

The DG is responsible for communicating with the driller's helper to ensure the core remains in the correct stratigraphic position.

7.0 QUALITY ASSURANCE RECORDS

7.1 Logbooks

7.2 Field forms

7.3 CoCs

8.0 ATTACHMENTS

Attachment A—Storing Core and Labeling a Core Box

Attachment A

Storing Core and Labeling a Core Box

METHOD OF STORING CORE IN CORE BOX

INSIDE OF CORE BOX TOP

(print inside box top)

Project #_____

Borehole #_____

Depths _____to_____

(record run depth inside box) ---------->

Top ------> *(fill across)*	------>	------>	*(mark depth of each spot where core run ends)*	*(mark depth of each spot where core run begins)*	----->
------>	*(mark depth of each spot where samples taken)* ------>	------>	------>	------>	------>
------>	------>	------>	------>	------>	------>
------>	------>	*(mark depth of each spot where samples taken)* ------>	------>	------>	------>
------>	------>	------>	------>	------>	**Bottom** *(end here)*

<---*(record run depth inside box)*

INSIDE OF CORE BOX BOTTOM

Attachment A. Storing Core and Labeling a Core Box.

11-05/ERD:rtd

LLNL Environmental Restoration Division (ERD)
Standard Operating Procedure (SOP)

ERD SOP 1.16: Four Wheel All Terrain Vehicle (ATV) Operation —Revision: 1

AUTHOR(S):
R. Bainer

APPROVALS: Date

Jesse Yow — 6/30/06
Division Leader

CONCURRENCE: Date

Rebecca Goodrich — 5/22/06
QA Implementation Coordinator

1.0 PURPOSE

As a general guide this SOP will cover the basics of safety, startup, and operation of the HONDA FOURTRAX 400 four wheel drive all terrain vehicle (ATV). The ATV can be used for a variety of applications including hauling light equipment and off-road water-level measurements, but is primarily used as a support vehicle for seismic data acquisition, which includes transporting seismic equipment and personnel to and from the field and during field operations.

2.0 APPLICABILITY

The ATV is uniquely appropriate for transporting off-road use and maneuvering light equipment used in the acquisition of seismic data. The ATV must be transported from site to site on a trailer or truck and cannot be operated on public roads. At the site, the ATV can be used to transport equipment and personnel to, from, and during assigned work. All site speed limits and offroad restrictions apply. ERD work activities are conducted within the framework of the institutional Integrated Safety Management System (ISMS). The Environmental Management System (EMS) is a component of the ISMS, which is also supported during the planning, performing, and evaluation of the work processes.

3.0 REFERENCES

3.1 HONDA, Owners Manual (1996), TRX 400 FW FOURTRAX Foreman 400.

3.2 Special Vehicle Institute of America (1991), "Tips and Practice Guide for the ATV Rider," ATV Safety Institute.

3.3 Business Services Department, Fleet Management Group (1996), *Honda ATV*, Letter from Sal Ruiz to Robert Bainer, Environmental Restoration Division, Lawrence Livermore National Laboratory, Livermore, Calif., dated July 26, 1996.

4.0 DEFINITIONS

4.1 Equipment

- ATV – HONDA FOURTRAX 400
- Elasic Wave Generator – EWG
- Helmet - LLNL supplied motorcycle helmet.
- Tool kit - emergency maintenance tools located in rear compartment of ATV.

5.0 RESPONSIBILITIES

5.1 Custodian

The ERD custodian, Robert Bainer, is responsible for on-the-job (OJT) training, operation, maintenance, and proper storage of the ATV.

5.2 Division Leader (DL)

The Division Leader's responsibility is to ensure that all activities performed by ERD at the Livermore Site and Site 300 are performed safely and comply with all pertinent regulations and procedures, and provide the necessary equipment and resources to accomplish the tasks described in this procedure.

5.3 Project Leader (PL)

The Project Leader's responsibility is to ensure that all activities are performed safely and comply with all pertinent regulations and procedures, work is authorized through an IWS, and there is sufficient funding to initiate the work.

5.3 ATV Operator

The ATV operator's responsibilities are to complete the required OJT and be approved by the custodian to operate the ATV.

6.0 PROCEDURES

6.1 General

Protective gear (hard hat, safety glasses, hearing protection, and safety shoes) must be worn when operating with the EWG. Prior to conducting work, perform the applicable preparation activities described in SOP 4.1, "General Instructions for Field Personnel". Personnel who are new to the LLNL project will receive direct field supervision and on-the-job training (OJT) from a Subject Matter Expert (SME) for at least the first 24 hours of field activity using the ERD Field Investigation Orientation Lesson Plan (course number EP7033-05).

6.2 Office Preparation

A. Review the HONDA owner's manual, tips, and practice guide.

B. Locate protective gear (helmet, safety glasses, hard hat, hearing protection, and safety shoes).

C. Obtain ignition key from custodian.

6.3 Safety Considerations

6.3.1 Serious injury can result from improper use of ATVs, but with preparation and practice, you can safely develop and expand your riding skills. ATVs handle differently from other vehicles, such as motorcycles and cars. A collision or rollover can occur quickly. Proper instruction and practice are important.

6.3.2 The procedures described in the following sections will be conducted in accordance with LLNL Integration Work Sheet (IWS) 12021 "Seismic Reflection Survey" when the ATV is used as a support vehicle for seismic data acquisition activities.

6.4 Pre Ride Inspection

A. Set PARKING BRAKE. The parking brake is engaged by pulling the left hand grip and pushing the lever marked Parking Brake.

B. Check that the transmission is in NEUTRAL.

C. Brakes. The left hand grip and the right foot pedal are the rear wheel brakes. The right hand grip is the front wheel brake. Check operation. Make sure there is no brake fluid leakage.

D. Fuel. Fill the fuel tank with unleaded gas when necessary. Check for leaks.

E. Tires and wheels. Check condition and pressure.

F. Controls. Check for proper function.

G. Lights and switches. Check for proper function.

H. Drive shaft and chassis. Check for damage or leaking fluids.

I. Steering. Check that the wheels turn properly as you turn the handlebars.

J. Cargo. Check that all cargo is properly secured.

K. Headlight and headlight dimmer switches. Check for proper function.

L. Engine stop switch has three positions. When the switch is in the Run position, the engine will operate. When the switch is in either OFF position, the engine will not operate.

M. Engine oil level. Check the oil level and add oil if required. Check for leaks.

N. Throttle. Check for smooth opening and closing in all steering positions.

O. Nuts, bolts, and fasteners. Check the wheels to see that the axle nuts are tightened. Check the security of all other nuts, bolts, and fasteners.

P. Underbody and exhaust system. Check for, and remove, any dirt, vegetation, or other debris that could be a fire hazard or interfere with the proper operation of the vehicle.

Q. Air cleaner housing drain tube. Check for deposits in the drain tube. If necessary, clean the tube and check the air cleaner housing.

R. Check tool kit.

6.5 Field Procedures

6.5.1 Starting the Engine

A. Lock the parking brake and make sure the transmission is in neutral. Note: starter will not operate unless the transmission is in neutral.

B. Turn the fuel valve and the ignition switch ON.

C. Turn the engine stop switch to RUN.

D. Move the choke level all the way to the ON position. Keep the throttle fully closed.

E. Press the starter button. After starting motor turn off choke.

6.5.2 Shifting Gears

A. To prevent injury, always keep your feet on the footrests while riding.

B. Be sure that the engine is sufficiently warmed up before you begin riding.

C. With the transmission in neutral, release the parking brake, but continue squeezing the front brake lever.

D. With the throttle released, raised the gearshift pedal one full stroke to shift into SL (super low) gear.

E. Release the rear brake lever and increase engine speed by gradually opening the throttle.

F. When speed increases, release the throttle and shift to first gear by raising the gearshift pedal one full stroke.

G. Repeat this sequence to progressively shift to second, third, and fourth (top) gear.

H. To downshift, reverse this sequence. Remember to release the throttle each time you shift to the next lower gear.

6.5.3 Riding in Reverse

A. First, bring the vehicle to a complete stop and make sure the transmission is in neutral.

B. While pushing the reverse selector knob (located on the left handlebar) in, squeeze the left brake lever, then depress the gearshift pedal.

C. Release the left brake lever.

D. Open the throttle gradually and ride slowly. Do not open the throttle suddenly or make abrupt turns.

E. To stop, release the throttle and gradually apply both the front and rear brakes. Do not abruptly apply the rear brake by itself.

F. To shift from reverse to neutral, raise the gearshift pedal one stroke.

6.5.4 Transporting Equipment

Note: Never transport additional personnel on the ATV.

A. The EWG and other trailer-mounted light equipment may be hauled by the ATV at a work site.

B. Attach trailer hitch to ball jack and secure.

C. Ensure that equipment does not exceed the recommended weight towage capacity as described in owner's manual.

D. Follow all posted traffic rules and wear the helmet.

E. When off road, take extreme care to avoid uneven terrain, and operate at a safe speed.

6.6 Field Post Operation

A. Lock the parking brake and make sure the transmission is in neutral.

B. Turn the fuel valve and the ignition switch off.

C. Turn the engine stop switch to OFF.

D. Turn all auxiliary switches off.

E. Check for damages and leaks.

6.7 Office Post Operation

A. Return protective gear to proper storage.

B. Return ATV to designated storage area.

C. Return ignition key to custodian, and report any damages or malfunctions that may have occurred during use.

7.0 QUALITY ASSURANCE RECORDS

7.1 Documentation of completed OJT.

8.0 ATTACHMENTS

8.1 Attachment A—Correspondence Letter - Business Services Department, Fleet Management Group

Attachment A

Correspondence Letter—LLNL Business Services Department

Interdepartmental letterhead

Mail Station L- 695

Ext: 2-7482

BUSINESS SERVICES DEPARTMENT
Fleet Management Group

July 26, 1996

To : Bob Bainer

From: Sal Ruiz

Subject : Honda ATV

Attached are copies of the Honda dealer documents I signed when the ATV was delivered on July 9, 1996. These documents are required by the dealer, however, we do not have to take any action on the DMV registration or the Application for Original Registration. Included in the package is a form titled "ATV Rider Training Certificate". This form covers the ATV safety and training requirements. You may want to keep all of these forms on file at your office.

I covered the safety recommendations/requirements with Richard Stanley at the time of delivery. I would recommend that you review the safety information on the document and ensure that all operators are aware of the information. Specifically, please note and observe the warning "Never drive an ATV on a public road, even a dirt or gravel one". Also, all of the on-site traffic rules, i.e. speed limits, directional signs etc., apply to the ATV and should be observed by the operators of the ATV.

Fleet Management will be responsible for scheduling and performing the maintenance on the unit. We would ask your cooperation in ensuring that the unit is brought in to the garage upon receiving a planned maintenance notice.

Please call me at 2-7482 with any questions.

LLNL Environmental Restoration Division (ERD)
Standard Operating Procedure (SOP)

ERD SOP 1.17: Treatment Facility Vapor Sampling and Analysis —Revision: 3

AUTHOR(S):
S. Gregory

ENVIRONMENTAL RESTORATION DIVISION
CONTROLLED COPY
#
THIS IS A RED STAMP
ERD

APPROVALS: **Date**

Jesse Yow 8/30/06
Division Leader

5-18-06
Engineering & Operations Group Leader

CONCURRENCE: **Date**

Rebecca Goodrich 8/3/06
QA Implementation Coordinator

1.0 PURPOSE

This standard operating procedure (SOP) describes the sampling procedures that will ensure the collection of representative samples and accurate analytical measurements of volatile organic compound (VOC) concentrations in vapor before and after treatment.

2.0 APPLICABILITY

This procedure is applicable to the sampling of vapor at Environmental Restoration Division (ERD) treatment facilities. ERD work activities are conducted within the framework of the institutional Integrated Safety Management System (ISMS). The Environmental Management System (EMS) is a component of the ISMS, which is also supported during the planning, performing, and evaluation of the work processes.

3.0 REFERENCES

3.1 Thermo Environmental Instruments Inc. MODEL TVA-1000 (Instruction Manual).

3.2 Foxborough Model OVA 128 Century Organic Analyzer (Instruction Manual).

3.3 ERD Standard Operating Procedure 4.8, "Calibration/Verification and Maintenance of Measuring and Test Equipment (M&TE)."

4.0 DEFINITIONS

See SOP Glossary.

5.0 RESPONSIBILITIES

5.1 Division Leader (DL)

The DL's responsibility is to ensure that all activities performed by ERD at the Livermore Site and Site 300 are performed safely and comply with all pertinent regulations and procedures, and provide the necessary equipment and resources to accomplish the tasks described in this procedure.

5.2 Project Leader (PL)

The PL's responsibility is to ensure that all activities are performed safely and comply with all pertinent regulations and procedures, work is authorized through an Integration Work Sheet (IWS), and there is sufficient funding to initiate the work.

5.3 Engineering and Operations Group Leader (EOGL)

The EOGL's responsibility is to ensure that proper procedures are followed for activities (e.g., construction, activation, facility operation and sampling).

5.4 Site Safety Officer (SSO)

The SSO's responsibility is to ensure that fieldwork is cnducted safely and in compliance with applicable IWSs, Site Safety Plans, SOPs, and any other applicable safety related documentation

5.5 Treatment Facility Compliance Manager (TFCM)

The TFCM prepares treatment facility sampling plans and reviews facility data for compliance with Substantive Requirements and other applicable permits for Site 300. The TFCM is responsible for shutting down the ERD Site 300 treatment facilities due to non-compliance. At the Livermore Site the aforementioned responsibilities are performed by hydrogeologists and engineers.

5.6 Treatment Facility Technician (TFT)

The TFT is responsible for properly collecting samples and field measurements per the ERD SOPs, IWS(s), and facility sampling plan.

5.7 Data Management Team (DMT)

The DMT is responsible for the disposition of the original documents received as a result of performing work activities described by this SOP.

6.0 PROCEDURE

Concentrations of VOCs in vapor may be determined in the field as described in Section 6.3 or the vapors can be collected and sent to an analytical laboratory for analysis as described in Section 6.4. There are two prescribed analyses available to detect VOCs in vapor. TO15-DI is available through an outside Contracted Analytical Laboratory (CAL) and should be used for self-monitoring sampling and reporting purposes. Samples that are not being collected and analyzed for self-monitoring and reporting purposes may be analyzed at an onsite lab using a modified TO14 analysis. Samples should be collected and analyzed as designated by the facility startup plan and/or sampling plan.

6.1 Preparation

6.1.1 Prior to commencement of field activities, perform preparation activities per SOP 4.1 "General Instructions for Field Personnel" including participation in the ERD Field Investigation Orientation Lesson Plan (course number EP7033-015). Direct field supervision and on-the-job-training (OJT) will be provided using ERD's Treatment Facility Operations Lesson Plan (course number EP7033-016). Successful completion of the OJT will be required prior to performing treatment facility vapor monitoring and sampling independently. When applicable and recommended by the ERD management, an employee may be granted an exception from training by completing the Exception from Training (LL6499) form. ERD management must approve the form and forward to the EPD Training Department for final authorization. The employee will be given course credit once the process is completed.

6.2 Safety Considerations

6.2.1 Work is to be performed in accordance with the LLNL Site Safety Plans, the Quality Assurance Project Plan (QAPP), applicable ERD SOPs, facility sampling plans, and ERD Integration Work Sheets (IWS). Work activities described by this SOP shall be performed in accordance with IWS 11534 "Treatability Testing and Related Activities" at the Livermore Site and IWS 11341 "Ground Water and Soil Vapor Treatment Facility Operations at Site 300."

6.3 Field Measurements

6.3.1 Documentation

Field measurements of VOC concentrations in vapor shall be recorded in the Controlled Facility Log Book, as well as on the facility field data sheet if being used. SOP 4.2, "Sample Control and Documentation" describes the information that is required to be documented in the Log Book.

6.3.2 Measuring and Testing Equipment (M&TE)

- A Toxic Vapor Analyzer/Flame Ionization Detector (TVA/FID), or an equivalent instrument, such as the Organic Vapor Analyzer/Flame Ionization Detector (OVA/FID) may be used. For the remainder of this SOP, the term TVA will be utilized.

- Select a critical piece of M&TE listed on the ERD M&TE list (see SOP 4.8, "Calibration/Verification and Maintenance of Measuring and Test Equipment [M&TE]").
- Before using the TVA, ensure that it complies and is being maintained in accordance with the critical M&TE requirements described in SOP 4.8.
- Consult the instrument manual for operating instructions.

6.3.3 VOC Measurements under Vacuum Conditions

When measuring VOC concentrations from a location that is under vacuum, a vacuum pump should be utilized. A single clean piece of transparent tubing is used to connect the pump to the sample port. A second tubing assembly incorporating standard tee fittings is used to connect the vacuum pump to the TVA, allowing excess vapor flow to be routed through the exhaust line. After the vacuum pump has been activated and stable VOC concentrations have been achieved, the value may be recorded. Consult the M&TE manual for measurement instructions.

Notes: It is always recommended to use a tee-style assembly with transparent tubing. when using the vacuum pump along with the TVA. Transparent tubing should be used to maintain proper flow through the meter, and to protect the TVA from drawing excess moisture into the instrument.

Excess moisture can douse the flame and possibly damage the instrument. The transparent tubing allows the user to see if water is being drawn into the tubing.

When possible, sample ports from the lowest expected concentration to the highest expected concentration.

6.3.4 VOC Measurements Under Positive Pressures and Ambient Conditions

When measuring VOC concentrations from a sample location under positive pressure conditions, it is not necessary to use the vacuum pump to deliver the sample to the TVA. Simply connect the tee-style tubing assembly to the sample port and to the TVA. If there is insufficient pressure, the TVA may be connected directly to the sample port with a single piece of transparent tubing, or the sample tip of the TVA may be inserted directly into the sample port. When measuring VOC concentrations from a sample location under ambient pressure conditions, the need for using a vacuum pump depends on the ability of the internal TVA pump to draw the sample. If flow is insufficient to keep the internal flame ignited, a vacuum pump may be necessary.

Notes: When collecting measurements by inserting the sample tip of the TVA directly into the sample port, ensure that the tip is inserted completely, to prevent ambient air from being drawn into the TVA.

When possible, sample ports from the lowest expected concentration to the highest expected concentration.

6.4 Analytical Laboratory Measurements

Vapor samples are collected following the steps below and sent to an analytical laboratory for measurement.

6.4.1 When collecting samples from a location that is under a vacuum; a vacuum pump is utilized along with the tubing assemblies described above. After allowing time for all lines to purge (see 6.3.3), attach the Tedlar® bag (or equivalent) to the effluent side of the vacuum pump and fill the Tedlar bag with the sample vapor. Do not over fill the bag as this can induce leakage. Be sure to fully tighten valves on bag to ensure sample is maintained.

6.4.2 To calculate the length of time for purging three tubing volumes, first measure the length of tubing, determine the volume in liters per minute that are being drawn, and then consult Attachment A for the appropriate time.

Note: When possible, sample ports from the lowest expected concentration to the highest expected concentration.

6.4.3 Tedlar® bags should be sent to the CAL and analyzed as soon as possible due to short hold times. The samples should be transported in a cooler without ice and exposure to sunlight should be avoided. Inspect Tedlar bag samples prior to shipment for leakage. Any samples suspected of leaking should be discarded and the location re-sampled. Follow ERD SOP 4.2 for proper sample control and documentation and SOP 4.4, "Guide to the Handling, Packaging, and Shipping of Samples" for shipping and handling procedures.

7.0 QA RECORDS

7.1 Facility Logbooks
7.2 M&TE Calibration and Maintenance Log Books
7.3 Analytical Results
7.4 CoCs (Chain of Custodies)
7.5 Self-Monitoring Report

8.0 ATTACHMENTS

Attachment A—Purge Time Calculation for Tubing

Attachment A

Purge Time Calculation for Tubing

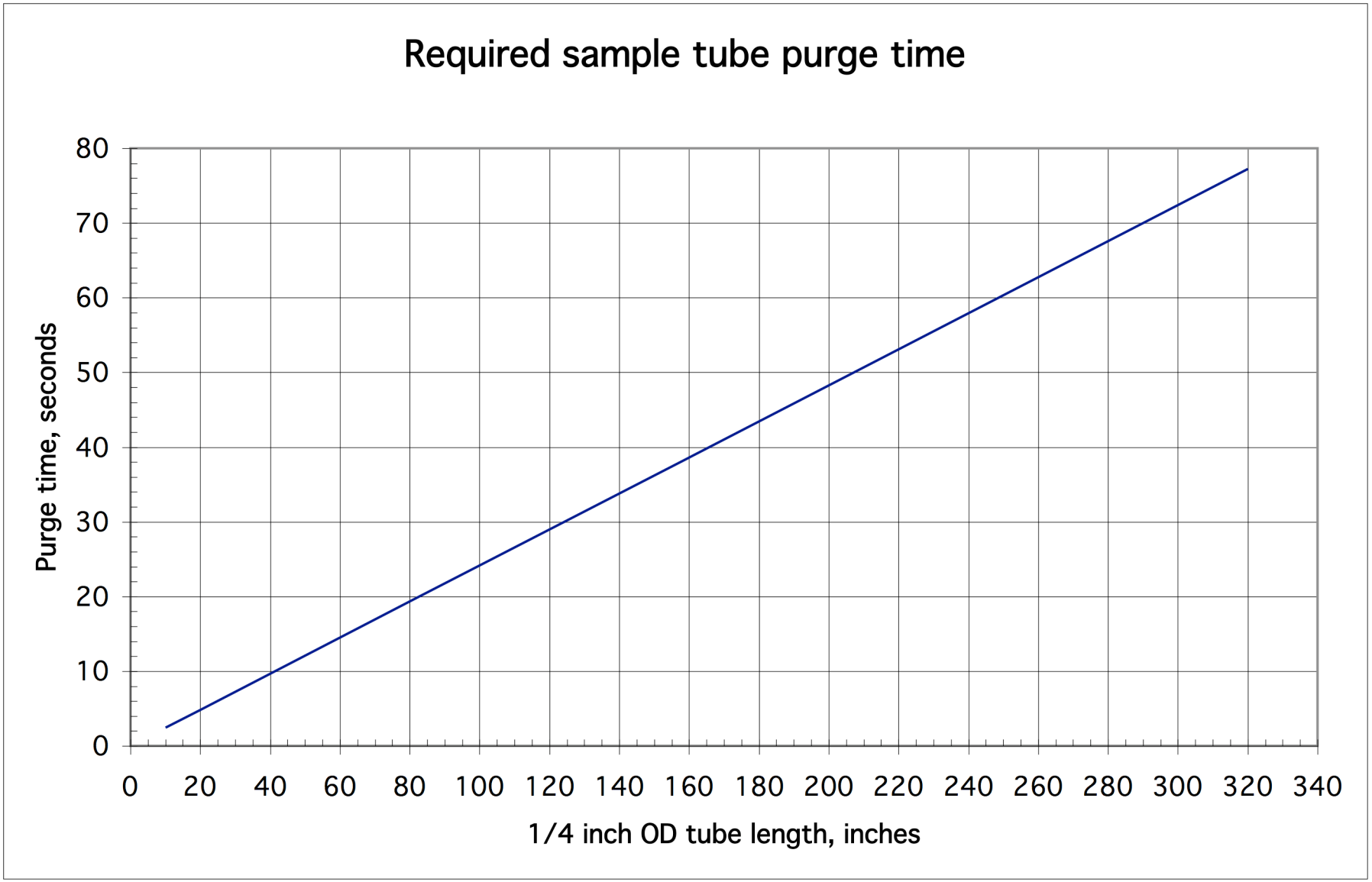

Attachment A. Purge time calculation for tubing.

LLNL Environmental Restoration Division (ERD)
Standard Operating Procedure (SOP)

ERD SOP 1.18: Deployment, Retrieval, Sampling, and Maintenance of Instrumented Membrane Technology (IMT) Borehole-Liner Systems —Revision: 2

AUTHOR(S):
S. Martins

ENVIRONMENTAL RESTORATION DIVISION
CONTROLLED COPY
#
THIS IS A RED STAMP
ERD

APPROVALS: **Date**

Jesse Yow 8/30/06
Division Leader

5-18-06
Engineering & Operations Group Leader

CONCURRENCE: **Date**

Rebecca Goodrich 8/4/06
QA Implementation Coordinator

1.0 PURPOSE

This document describes the procedures used to deploy, retrieve, sample and maintain Instrumented Membrane Technology (IMT) borehole liner systems. These systems are used to keep uncased boreholes from collapsing, to deploy a variety of sensors that monitor sub-surface conditions and to sample the vadose zone and/or the water table.

2.0 APPLICABILITY

These systems are used to deploy sensors or sampling devices in soils where these devices are to be retrieved or renewed on a continuing bases, or where the system design is too complex to be deployed economically with other more permanent methods. ERD work activities are conducted within the framework of the institutional Integrated Safety Management System (ISMS). The Environmental Management System (EMS) is a component of the ISMS, which is also supported during the planning, performing, and evaluation of the work processes.

3.0 REFERENCES

3.1 Martins, S. A. (1992), *A Method for Collecting Soil Vapor from the VADOSE Zone with an Instrumented Membrane System*, Lawrence Livermore National Laboratory, Livermore, Calif. (UCRL-ID-109765).

3.2 Martins, S. A., G. L. McQueen, R. E. Martinelli and M. C. Jovanovich (1992), *Factors Affecting Trichloroethylene (TCE) Recovery from SEAMIST Pads*, Lawrence Livermore National Laboratory, Livermore, Calif. (UCRL-JR-110604abs).

3.3 Mallon, B. S. A. Martins, W. Lowry, and C. Cremer (1992), *SEAMIST™ Soil Sampling for Tritiated Water: First Years' Results*, Lawrence Livermore National Laboratory, Livermore , Calif. (UCRL-JR-109015).

4.0 DEFINITIONS

See SOP Glossary.

5.0 RESPONSIBILITIES

5.1 Division Leader (DL)

The DL's responsibility is to ensure that all activities performed by ERD at the Livermore Site and Site 300 are performed safely and comply with all pertinent regulations and procedures, and provide the necessary equipment and resources to accomplish the tasks described in this procedure.

5.2 Project Leader (PL)

The PL's responsibility is to ensure that all activities are performed safely and comply with all pertinent regulations and procedures, work is authorized through an IWS, institution requirements of the Findings and Determination are followed, and there is sufficient funding to initiate the work.

5.3 Engineering and Operations Group Leader (EOGL)

The EOGL's responsibility is to ensure that proper procedures are followed for activities (e.g., construction, activation, facility operation and sampling).

5.4 Site Safety Officer (SSO)

The SSO's responsibility is to ensure the safety of ERD's ongoing operations and facilities and of any work performed.

5.5 Activity Leader (AL)

The AL's responsibilities are to write the sampling plan, oversee the field team, deliver all data to the Data Management Team (DMT), review the data collected, and prepare any final reports.

5.6 Field Team

The field team is responsible for assembling and testing supplies and equipment prior to work in the field. The field team is responsible for field recordkeeping and for collecting all samples according to the sampling plan and this SOP. The field team may make changes to the sampling plan in the field if required by logistics or terrain when authorized by the AL.

5.7 Technical Release Representative (TRR)

The TRR is responsible for the acquisition and administration of blanket contract releases for the procurement of goods and services. The TRR has the authority to obligate LLNL for payment of goods and services, delegated by the LLNL Business Manager through the Procurement Department.

5.8 Data Management Team (DMT)

The DMT's responsibilities are to receive and process data according to applicable procedures and assist in developing sampling plans and sampling location IDs. The DMT is responsible for the disposition of the original documents received as a result of performing work activities described by this SOP.

6.0 PROCEDURES

There are five distinct activities associated with the use of IMT borehole liners. These activities are performed at different times in the life cycle of each installation. The first involves site selection, borehole construction, and membrane specification and procurement. An instrumentation and/or sampling plan must be devised prior to deployment so that all necessary equipment and supplies may be ordered. When the borehole is ready and each membrane has been instrumented, the IMT borehole liner is deployed. Attachment A illustrates a typical deployment. Once in place, data acquisition and/or sampling from the IMT membranes may begin. The last activity is the retrieval of an IMT membrane. Membranes are retrieved to collect samples, change the membranes instrumentation or to terminate the use of the IMT system at that location.

6.1 Preparation

Prior to conducting work, perform the applicable preparation activities described in SOP 4.1, "General Instructions for Field Personnel". Personnel who are new to the LLNL project will receive direct field supervision and on-the-job training (OJT) from a Subject Matter Expert (SME) for at least the first 24 hours using the ERD Field Investigation Orientation Lesson Plan (course number EP7033-05). Office preparations will vary with the IMT activity that is to be performed. The user should be aware that not all of the preparations listed below would be performed at any one time.

6.1.1 Prior to borehole construction, the AL should contact the TRR to arrange for IMT membrane procurement and/or construction. If the final specifications for membrane procurement depend on the geological characteristics of the borehole,

a blank IMT membrane should be available prior to drilling so that the borehole can be kept open while waiting for the fully instrumented liner.

6.1.2 The AL should arrange for drilling and select the IMT borehole site.

6.1.3 If a new IMT membrane is to be acquired, use data from the borehole construction to finalize the procurement specification for the IMT membrane. Give these specifications to the TRR so that the order can be completed.

6.1.3.1 Order all requisite sensors, data loggers and sampling supplies that will be needed for deployment far enough in advance so that they will be available when needed.

6.1.3.2 All data logger programs to be used with these installations should be written and tested in the office or laboratory prior to field installation. Write a plan that lists all of the sensors to be used with the IMT membrane and describes their placement. This plan should also include the rate at which data are to be acquired from each sensor. If the data logger is to control some aspect of the IMT facility, these functions should be listed.

6.1.3.3 When data are to be acquired electronically from IMT installations, appropriate transducers must be selected. If the manufacturer supplies suitable calibration data with these transducers, these calibration values may be used to represent these electronic signals as appropriate engineering units. In other cases, each transducer must be calibrated to derive these calibration values before installation in the field. Once the calibration factors have been established, the user can choose to incorporate them into the data logger program or to apply them during post processing. The choice of when to convert the electronic signals to engineering units can effect the resolution of these data.

6.2 Safety Considerations

The procedures described in the following sections will be conducted in accordance with LLNL Integration Work Sheet (IWS) 12654 “Drilling in VOC and Mixed Waste-Contaminated Soils at the Livermore Site” and IWS 11578 “Drilling in VOC-contaminated soils at the Livermore Site.” Drilling activities at Site 300 should be conducted in accordance with IWS 12684 “Site 300 Drilling Activity.”

6.3 IMT Membrane Deployment

6.3.1 If the target borehole for this installation is new, acquire a four or five foot length PVC pipe with a slightly larger outer diameter (OD) than the borehole. This pipe acts as a header and an attachment point for the IMT membrane wellhead. It should be driven into the borehole with about 6 to 12 inches extending above the surface. Seal the annulus of the borehole around the header pipe with grout.

If you are changing the IMT membrane in an old borehole, remove the old liner as described in the membrane retrieval procedure. A successful installation requires an empty, uncased borehole.

6.3.2 There are two types of IMT deployment canisters. The first is the old SEAMIST type that is deployed vertically over the borehole (Attachment A). The second type is the FLUTe type that is deployed horizontally. Select the one appropriate for the site. Most new applications will require the FLUTe canister.

6.3.3 Each membrane is provided with a tether-rope that is attached to the distal end of the membrane. Connect this tether to the rope found in the deployment canister with a shackle or with tie-wraps. With one person feeding the membrane into the canister, turn the canister handle in a clockwise direction and feed the rope, then the membrane into the canister. When all of the membrane is in the canister, lock the IMT wellhead onto the canister. The FLUTe system uses cam-lock fittings for this purpose while the SEAMIST system uses a friction fit.

6.3.4 Maneuver the deployment canister into the vicinity of the borehole and insert the IMT wellhead into the header-pipe. Level the deployment canister to reduce the strain on the components. Install a pressure gauge and pressure relief valve in the wellhead. Insert a compressed air hose into the well head quick-disconnect. Pressures up to 5 psi may be used with the FLUTe system, but the older SEAMIST system should be limited to about 3 psi. Most of the pressure relief valves on IMT installations at LLNL are set at less than 2 psi.

6.3.5 Apply air pressure to the deployment canister through the wellhead. This will inflate the membrane and force it down the borehole as the membrane is unwound from deployment canister spindle. Be sure to restrain the deployment canister handle so that the system's momentum will not force more tether and/or membrane down the borehole than can be installed at any given time.

When no more tether or membrane moves down the borehole and the canister pressure does not drop for several minutes, one can assume that the deployment is complete. Exceptions to these indicators include a mechanical snag in the tether rope or membrane that prevents further deployment or very tight soil formations that prevent the air below the membrane from escaping into the soils. Both types of deployment canisters have windows through which the operator can view the deployment. One way to remove uncertainty about the completion of deployment is to place a mark on the tether rope that is visible from the deployment canister window at a place were the deployment in known to be complete. When this mark comes into view, one knows that the deployment is finished. The viewing window can also be used to diagnose other problems such as tangled tether or snagged membrane.

6.3.6 Disconnect the deployment canister from the wellhead and connect the membrane's tether to the wellhead cap with a shackle or with tie-wraps. Disconnect the deployment canister rope from the membrane-tether and close the wellhead by installing the cap. Pressurize the wellhead with compressed air and check for leaks. Repair any leaks that are found.

6.3.7 Disconnect the deployment compressor line from the wellhead and attach the air supply line that will be used to maintain membrane pressure. Pressure regulators used on LLNL IMT systems are set between 0.5 psi and 1.6 psi and will open at their set point if over pressure occurs. Monitor membrane pressure for a day or two to ensure that there are no leaks in the membrane for which the maintenance air supply cannot compensate. Air escaping the pressure relief valve is a good indication that the membrane is tight and does not leak excessively.

6.4 IMT Membrane Retrieval

6.4.1 Depressurize the IMT membrane by holding the pressure relief valve open and/or removing the air hose from its fitting.

6.4.2 When the pressure has been released in the membrane, remove the wellhead cap. Maneuver the deployment canister into the vicinity of the borehole. Connect the tether-rope of the membrane to the rope found in the deployment canister with a shackle or with tie-wraps.

6.4.3 Remove the wellhead cap from the tether and insert the deployment canister fitting into the wellhead. Level the deployment canister to reduce the strain on the components. Turn the canister handle in a clockwise direction so that the tether-rope and then the membrane will be wound up inside the canister.

6.4.4 When all of the membrane is in the canister, remove the wellhead from the header pipe.

6.4.5 The membrane may be removed from the deployment canister by disconnecting the wellhead from the canister and pulling the membrane out of the canister by hand. When the membrane is removed in this way, the inside of the membrane will be exposed to the air, protecting the side of the membrane exposed to the soil from contact with personnel or the environment.

If the deployment canister is pressurized through the port on the wellhead, the membrane will be everted with the soil side out. One would chose this method if one wishes to retrieve or install sorbent-pads, or if instruments connected to the outside of the membrane are to be repaired, replaced or removed.

6.5 Electronic Data Acquisition

6.5.1 All data loggers have a limited amount of data storage. On most data loggers, data are logged into a circular buffer where the oldest data are overwritten by the newest. To avoid the loss of data, provide a method (such as modem or radio) to automatically retrieve data at regular intervals, or set up a schedule to visit the data logger and down load data manually.

6.5.2 After data have been down loaded from the data logger, process these data so that they can be archived in ways that others can understand. This usually means that data recorded as millivolts (mV) or counts should be converted to the appropriate engineering units.

6.5.3 If these values are to be incorporated into the Data Management System, transfer these data to DMT at regular intervals.

6.5.4 Review the data regularly to ensure that all sensors are giving reliable readings and that power to the data logger is sufficient for continued operation.

6.6 IMT Sampling

Most vapor sampling methods used at IMT installations are similar to those used with other types of borehole completions. Because some IMT installations are equipped with sorbent-pads, the user may wish to become familiar with the proper techniques to deploy and retrieve these pads.

All IMT systems equipped to sample from soils identify each sample location with a port or pad number. Each number is associated with a designated depth from the surface. Samples are labeled with unique identifiers that usually combine the sample location number with a borehole descriptor. Consult the DMT for proper sample names for each site. Vapor sampling IMT liners are described in Attachment B.

6.6.1 Vapor sampling for VOCs may include the use of Summa canisters, sorbent-tubes, Tedlar bags, or Organic Vapor Analyzer (OVA). Use the accepted method associated with these devices to acquire samples.

6.6.2 Because most of the tritium in the vadose zone of our soils is in the form of water vapor, these samples are usually acquired by pumping soil-gas through a cold trap where this water can be condensed and stored for laboratory analysis by scintillation counter. For details on this method, consult Martins (1992). (Reference 3.1 of this SOP).

6.6.3 Sorbent-pads from IMT membranes are used to collect soil pore-water samples. These pads can be weighed prior to deployment and again after they are retrieved. Subtracting the dry weight from the wet weight will give the net sample weight prior to analysis. Because some soil particles can adhere to these pads, it is recommended that the analytical laboratory dry each pad to obtain a third pad weight after analysis is complete. If the post-analytical weight is greater than the pre-deployment weight, the former should be used to calculate sample weight. Once sorbent-pads have been collected for analysis, they should be treated as soil samples for each analyte of interest. Because VOCs can be lost through volatilization, they must be handled quickly and carefully. For more details on the use of sorbent-pads for VOC analysis, consult Martins, et al. (1992). (Reference 3.2 of this SOP). Attachment C describes the sorbent-pad liners.

6.6.3.1 IMT sorbent-pads can be deployed in pouches on the outside of the membrane. Retrieve the membrane and remove the wellhead from the borehole. Pressurize the deployment-canister and evert the membrane horizontally over a clean surface. When the first pouch appears, carefully remove the pad and place the pad in a pre-weighed vessel (such as Zip-lock® plastic bag or soil-VOA) as quickly as possible. Repeat this process until all pads have been retrieved.

6.6.3.2 IMT sorbent-pads can be deployed as a tube wrapped around the entire circumference of the membrane. These pads are secured with either buttons, snaps, or ties to the membrane. To sample these pads, retrieve the membrane and remove the wellhead from the borehole. Pressurize the deployment-canister and evert the membrane horizontally over a clean surface. As the first pad emerges, carefully place a pre-weighed plastic bag over the part of the membrane containing the pad and continue to evert the membrane until the entire pad is exposed. Detach the pad from

the membrane by manipulating the pad fasteners through the plastic bag. Remove the pad and bag from the membrane and seal the pad inside the bag as quickly as possible. Repeat this process until all pads have been retrieved.

6.6.3.3 With both methods, the operator should weigh the pads after sampling or instruct the analytical laboratory to do this so the net weight of the sample may be obtained.

6.7 IMT System Maintenance

Many of the components of these systems will require maintenance from time to time due to natural deterioration or accidental damage. The best way to determine when the system needs attention is to monitor it on a regular basis. When in the field, observe all visible components of the system. Review all data collected with these systems and look for any unexplained anomalies.

6.7.1 Low membrane pressure could be the result of loose connectors, faulty pressure hoses, problems with the air-supply system or holes in the membrane itself. If the problem occurs, you will need to check all of these possibilities.

6.7.2 Most of our IMT systems use Brailsford model TD-4A, 12 VDC diaphragm pumps to maintain membrane pressure. When these pumps fail, it is usually because the Teflon flapper valves get dirty. When this happens, one can disassemble the pump head and clean the valves. If the valves are damaged, replace the pump head or the entire pump. The next most frequent fault is a ruptured diaphragm. Installing a new diaphragm under the pump head should correct this problem. Replacement pumps or parts for these pumps are available from Brailsford & Co, Inc., Rey, NY.

6.7.3 Sealed lead-acid batteries power all IMT data loggers and most air pumps. Many of the batteries are charged with solar panels. Solar panels will become dirty over the summer months and should be cleaned before the shorter days and frequent overcast of the winter months reduce daylight to the point were the batteries cannot maintain their charge.

The lead-acid batteries have a finite lifetime and must be replaced after several years of use. When these batteries can no longer hold a normal voltage between charges, or charging the batteries becomes ineffective, it is time to replace these batteries. Marginal batteries should be replaced before winter.

6.7.4 Many sensors and gauges will function indefinitely without the need of repair, replacement, or recalibration. Others, such as gypsum blocks, have a finite lifetime and must be replaced at regular intervals. Study the data from these devices at regular intervals and look for suspicious results. Sometimes the only way to know when sensors need attention is to observe or test them.

6.8 IMT Vapor Extraction System

IMT borehole liner systems may be used to deploy rigid piping for either passive or active vapor extraction. These borehole liners are constructed specifically for this purpose and are deployed in a slightly different way from the normal liner.

A very bulky pad is attached to the outer side of the membrane, starting at the top of the extraction zone. The other end of the pad is terminated at the bottom of the liner with a 3" diameter threaded coupler. This threaded coupler is connected to the tether line by a threaded plug. When the membrane is half deployed, the plug and tether line are removed from the threaded coupler, and are replaced by Tremie pipe. Sections of pipe are added as the remainder of the membrane is deployed. The last section of Tremie pipe is sealed with a packing-gland at the well head.

Once deployed, vapor from the soil surrounding the pad in the extraction zone is pulled through the pad into the Tremie pipe. This gas stream is then appropriately treated at the surface for the analytes detected.

6.8.1 Prepare the borehole with a grouted wellhead as described above. If the extraction zone is deeper than 30 to 40 feet, install a rigid support structure around the wellhead that can support the Tremie pipe after installation. An example of this type of support may be viewed in Attachment D.

6.8.2 Load the new-type deployment canister with the membrane as described above. Care must be taken when the 3" threaded coupler is first introduced into the deployment canister to avoid damage to the membrane, threaded coupler and canister. Attachment E shows the threaded coupler as it enters the deployment canister.

6.8.3 Deploy the membrane until the 3" threaded coupler is visible in the canister window. The membrane may stop feeding from the canister when the threaded coupler is at the wellhead. If this happens, remove the canister from the wellhead and feed the threaded coupler through by hand.

Once the 3" threaded coupler is at the wellhead, remove the plug from the top of the wellhead. If the canister is still connected to the wellhead, remove the canister. Hold the end of the membrane and remove the plug connected to the tether line to the 3" threaded coupler. Push this threaded coupler into the wellhead and orient it toward the top of the wellhead where the wellhead plug was removed.

Place the threaded retention ring and rubber packing gland on the first section of Tremie pipe with the thread on each pointing in the same direction. Push the threaded end of the Tremie pipe into the top of the wellhead and screw it into the 3" threaded coupler that is connected to the end of the membrane. Replace the "dust" cover in the wellhead where the canister was connected.

Disconnect the compressed air line from the wellhead and replace it with a camlock fitting connected to a shop-vacuum. The shop-vacuum is needed to supply enough air to deploy the membrane and to replace air that is lost past the Tremie pipe.

Loosely thread the retention-ring into the wellhead around the Tremie pipe. Turn on the shop-vacuum and start lowering the Tremie pipe down the borehole. The weight of the Tremie pipe will increase as more sections of pipe are added. After about 30 to 40 feet, the pipe becomes difficult to hold by hand. At this point restrain the pipe using the same techniques described in ERD SOP-1.3, "Drilling" and SOP-1.4, "Monitor Well Installation." Remember that the wellhead conductor casing goes down less than 6 feet and is not designed to hold the weight of many sections of Tremie pipe. When installation is complete, the bulk of this weight must be born by the supporting structure described in Section 6.7.1.

When one section that is less than half of the total length of Tremie pipe has been installed, use the compressed air line in place of the shop-vacuum. Bring the membrane pressure up to at least 2 psi. If the membrane pressure is too low at this point, the membrane will not deploy correctly.

When installation is complete, remove the camlock attached to the compressed air source and connect the air-maintenance air-line to the wellhead. Tighten the retention ring around the Tremie pipe at the well head and bring the membrane pressure up to 1 or 2 psi. Check for leaks.

6.8.4 Once the membrane installation is complete, and the Tremie pipe is secured to the supporting structure, vapor extraction may commence.

7.0 QUALITY ASSURANCE RECORDS

7.1 Chain-of-Custody Form

7.2 Document Control Logbook

7.3 Sampling and Analysis Plans

8.0 ATTACHMENTS

Attachment A—IMT Deployment Schematic Using a Science & Engineering Associates (SEA) Type Deployment Canister

Attachment B—IMT Vapor/Water Sampling Schematic

Attachment C—IMT Sorbent-Pad Sampling Schematic

Attachment D—IMT Vapor Extraction Borehole Liner System with Support Structure

Attachment E—Loading IMT Vapor Extraction Borehole Liner Into Deployment Canister

Attachment A

IMT Deployment Schematic Using a SEA Type Deployment Canister

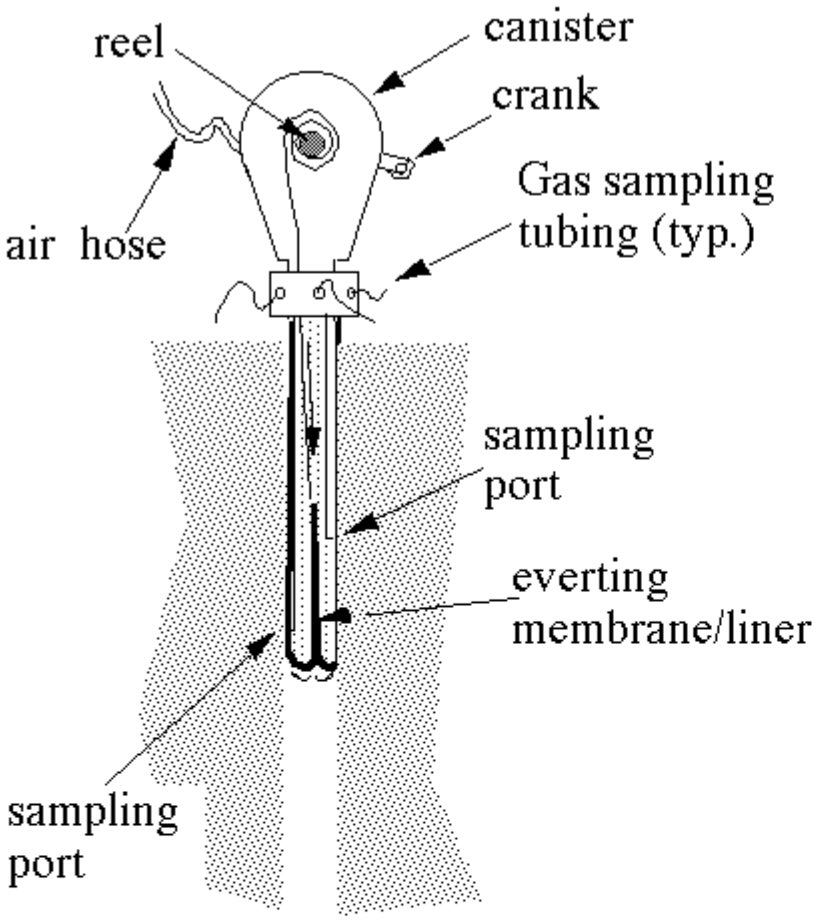

Attachment A. IMT deployment schematic using a SEA type deployment canister*.

* Illustrations courtesy of FLUTe, Santa Fe NM.

Attachment B

IMT Vapor/Water Sampling Schematic

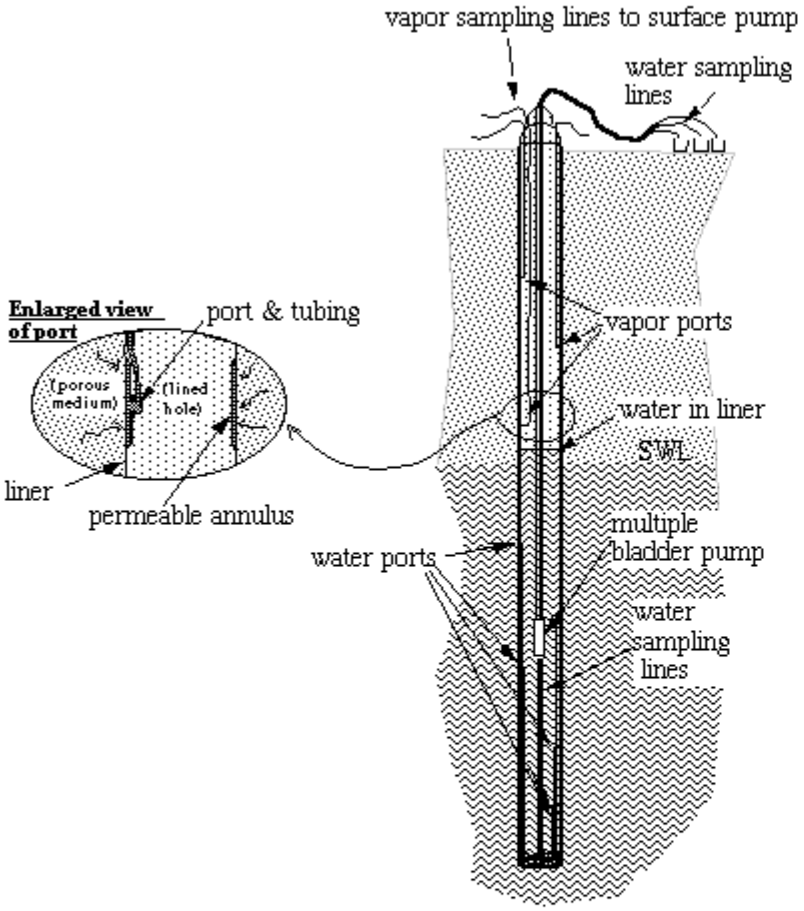

Attachment B. IMT vapor/water sampling schematic*.

* Illustrations courtesy of FLUTe, Santa Fe NM.

Attachment C

IMT Sorbent-Pad Sampling Schematic

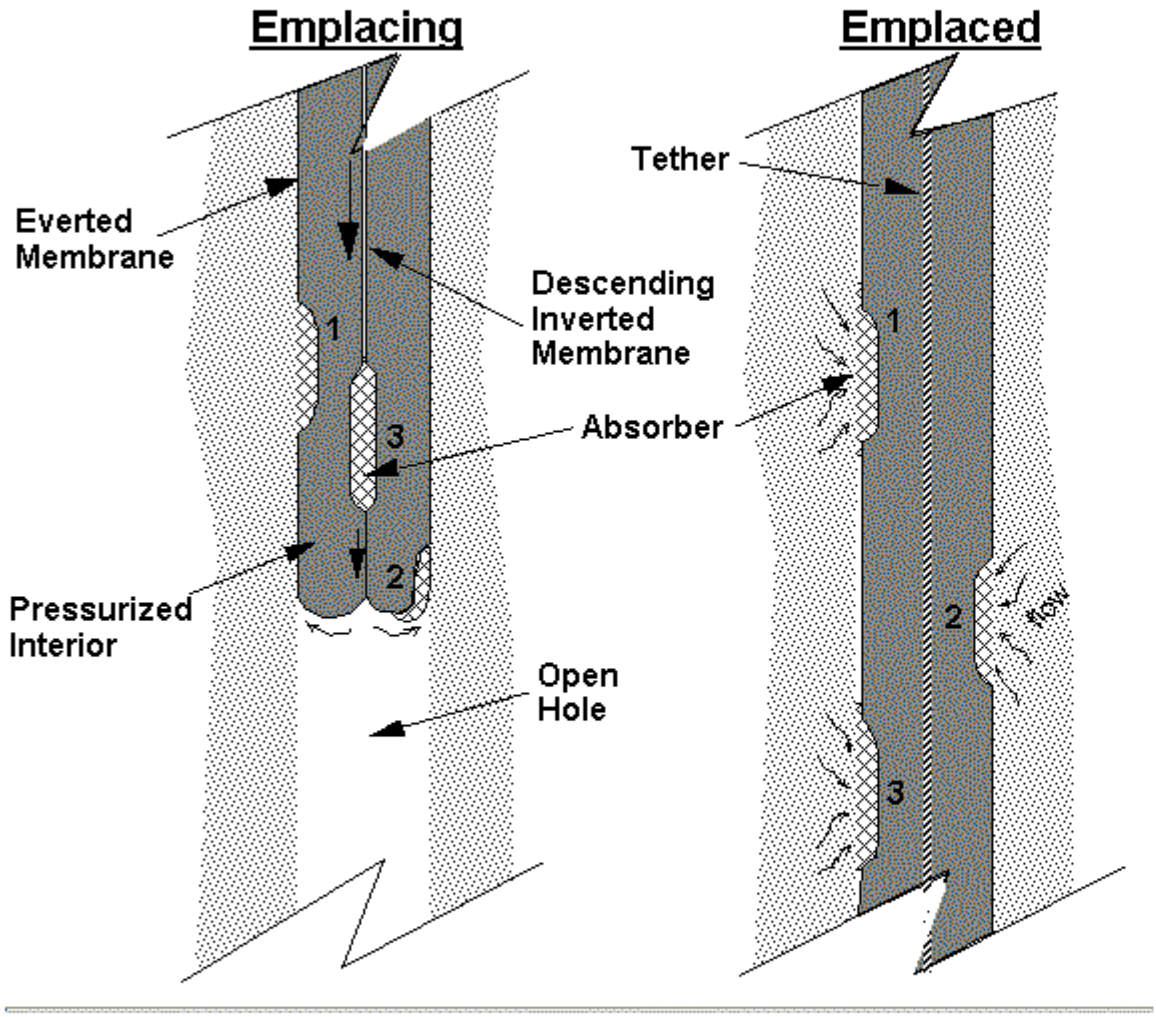

Attachment C. IMT sorbent-pad sampling schematic*.

*** Illustrations courtesy of FLUTe, Santa Fe NM.**

Attachment D

Attachment D: IMT Vapor Extraction Borehole Liner System with Support Structure

Attachment D. IMT vapor extraction borehole liner system with support structure.

Attachment E

Attachment E: Loading IMT Vapor Extraction Borehole Liner Into Deployment Canister

Attachment E: Loading IMT vapor extraction borehole liner into deployment canister.

LLNL Environmental Restoration Department (ERD)
Standard Operating Procedure (SOP)

ERD SOP 2.1: Pre-sample Purging of Wells—Revision: 8

AUTHOR(S):
R. Goodrich and G. Howard

APPROVALS:	Date
Department Manager	1/7/09
Engineering & Operations Division Leader	11-17-08

CONCURRENCE:	Date
QA Implementation Coordinator	12/3/08

Type of Procedure (per ES&H Manual, Document 3.4)

☒ Informational Use ☐ General Use ☐ Continuous Use

1.0 PURPOSE

The purpose of this SOP is to identify well purging (evacuation) procedures that will ensure enough stagnant water in the well is replaced by ground water so a representative sample of the aquifer can be collected. In some situations, it may be possible to obtain a representative sample from the aquifer without prior purging.

2.0 APPLICABILITY

This procedure provides guidelines for Field Personnel to purge wells adequately and appropriately by using sampling devices, such as a bailer, bladder pump, electric submersible pump, or a specific-depth grab sampling device prior to sample collection. ERD work activities are conducted within the framework of the institutional Integrated Safety Management System (ISMS). The Environmental Management System (EMS) is a component of the ISMS, which is also supported during the planning, performing, and evaluation of the work processes.

3.0 REFERENCES

3.1 Barcelona, M.J., J.P. Gibb, J.A. Helfrich, and E.E. Garske (1985), *Practical Guide to Ground Water Sampling*, U.S. Government Printing Office, Washington, D.C. (EPA/600/2-85/104).

3.2 Korte, N. and P. Kearl (1984), *Procedures For The Collection and Preservation of Ground Water and Surface Water Samples and for the Installation of Monitoring Wells*, U.S. Department of Energy, Grand Junction, Colo.

3.3 Morrison, R.D. (1983), *Ground Water Monitoring Technology, Procedures, Equipment and Applications*, TIMCO Manufacturing, Inc., 85-90.

3.4 Morse, S.I. (1997), San Francisco Bay Regional Water Quality Control Board, Toxics Cleanup Division; letter to Interested Parties. Subject: *Utilization of Non-Purge Approach for Sampling of Monitoring Wells Impacted by Petroleum Hydrocarbons, BTEX, and MTBE,* File: 1123.64, January 31, 1997.

3.5 Robbins, G.A. and J.M. Martin-Hayden (1991), Mass Balance Evaluation of Monitoring Well Purging: Part 1. Theoretical Models and Implications for Representative Sampling," *J. Contam. Hydrol.* 8, 203–224.

3.6 Schilling, K.E. (1995), Low-Flow Purging Reduces Management of Contaminated Groundwater, *Environmental Protection*, December 1995.

3.7 U.S. EPA (1992), *RCRA Ground-Water Monitoring: Draft Technical Guidance*, Washington, D.C. (EPA/530-R-93-001).

3.8 U.S. EPA (1995), Low-Flow (Minimal Drawdown) Ground-Water Sampling Procedures, *Ground Water Issue*, EPA/540/S-95/504.

3.9 U.S. EPA (1995), Use of Low-Flow Methods for Ground Water Purging and Sampling: An Overview, *Quick Reference Advisory* (December 1995).

4.0 DEFINITIONS

See SOP Glossary.

5.0 RESPONSIBILITIES

5.1 Department Manager (DM)

The DM's responsibility is to ensure that all activities performed by ERD at the Livermore Site and Site 300 are performed safely and comply with all pertinent regulations and procedures, and provide the necessary equipment and resources to accomplish the tasks described in this procedure.

5.2 Project Leader (PL)

The PL's responsibility is to ensure that all activities are performed safely and comply with all pertinent regulations and procedures, work is authorized through an Integration Work Sheet (IWS), and there is sufficient funding to initiate the work.

5.3 Engineering and Operations Division Leader (EODL)

The EODL's responsibility is to ensure that proper procedures are followed for activities (e.g., construction, activation, facility operation and sampling).

5.4 Site Safety Officer (SSO)

The SSO's responsibility is to ensure that fieldwork is conducted safely and in compliance with applicable IWSs, Site Safety Plans, SOPs, and any other applicable safety related documentation.

5.5 Sampling Coordinator (SC)

The SC's responsibility is to supply a quarterly Sampling Plan to the Field Personnel and track sample collection throughout the quarter to ensure completion of the sampling plan within the specified sampling quarter.

5.6 Field Personnel (FP)

The FP are responsible for the safe completion of evacuation and collection of purge water, when necessary from monitor wells according to guidelines set forth by this procedure, as well as other associated SOPs. The wells to be purged on a frequent basis are listed in the quarterly Sampling Plan provided by the SC. The FP are also responsible for performing work in accordance with the requirements of the IWSs listed in Section 6.4.

5.7 Field Support Personnel (FSP)

The FSP are responsible for providing necessary equipment, collection devices, and general field support, which enables sampling personnel to perform field activities in a timely and efficient manner.

5.8 Data Management Team (DMT)

The DMT is responsible for generating routine quarterly sampling plans and distributing to the SC to supply to FP. DMT is also responsible for the disposition of the original documents received as a result of performing work activities described by this SOP.

6.0 PROCEDURES

6.1 Procedure Exception

Tritium is considered a conservative contaminant (i.e., it will not volatilize [fractionate] or change activity appreciably upon contact with the atmosphere) therefore, pre-sample purging is not necessary. SOP 2.9, "Sampling for Tritium in Ground Water," discusses tritium sampling in more detail. Also, pre-sample purging of low-yielding monitor wells is covered under SOP 2.7, "Pre-sample Purging and Sampling of Low-Yielding Monitor Wells.

6.2 Dedicated Sampling Devices

6.2.1 In some cases, monitor wells are not equipped with a dedicated sampling device. If the well is not fitted with a dedicated sampling device, the procedure and/or temporary equipment required for well evacuation is determined by the SC and appropriate personnel.

6.2.2 Frequently sampled monitor wells have dedicated sampling pumps and associated equipment necessary to purge and sample the well. Discharge and sampling tees are dedicated and are stored inside the steel protective casing. At Site 300, control boxes for electric submersible pumps up to 2.0 horsepower (hp) are also dedicated and are locked inside the protective casing. At Livermore Site, portable control boxes are to be used on all pumps. In wells where a specific-depth grab sampling device is used, the dedicated equipment (due to its compact nature) may be stored either in the locked stovepipe or at a remote location. Installation of dedicated pumps is described in SOP 2.8, "Installation of Dedicated Sampling Devices."

6.3 Preparation

6.3.1 Prior to commencement of field activities, perform preparation activities described in SOP 4.1, "General Instructions for Field Personnel," including participation in the ERD Field Investigation Orientation Lesson Plan (course number EP7033-05).

6.3.2 Review all pertinent sampling information, such as the quarterly Sampling Plan and Ground Water Sampling Data Sheets. The plan and/or sampling data sheets contain the following information:

- Locations to be sampled.
- Proposed sampling methods (See Attachment A, Methodology Sampling Codes).
- Requested analyses.
- Contract analytical laboratory (CAL) to which samples are to be sent for analyses.
- Estimated amount of purge water to be collected.
- Current technical information for each well.

6.3.3 Obtain appropriate data collection forms e.g., Chain-of-Custody (CoC) forms, Ground Water Sampling Data Sheets (Attachment B), assigned Document Control Logbook, labels, and any necessary shipping forms. Instructions for completing the logbook entries and field forms are provided in SOP 4.2, "Sample Control and Documentation". Consult with the SC for the appropriate pre-sample purging method to apply to the site if it is not indicated on the sampling plan.

6.3.4 Contaminant information is provided in the quarterly Sampling Plan or by the SC and should be reviewed prior to sampling. The SC also provides contaminant information for newly completed installations that may not appear on the plan.

6.3.5 Obtain appropriate materials to conduct field work according to Attachment C, Equipment Checklist.

6.3.6 The number and type of sample containers needed for the sampling event should be obtained from the sample bottle inventory. Field Personnel should keep a sufficient stock of sample containers on hand and also maintain an inventory of supplies (e.g., trip blanks, field blank water ordered from the CAL or B151 onsite lab, plastic bags) to ensure adequate sampling supplies are available at all times.

6.4 Safety Considerations

6.4.1 Personnel shall meet all training requirements; review the appropriate Site Safety Plan (SSP), all applicable SOPs, and Integration Work Sheets (IWSs) prior to performing work.

6.4.2 Work activities described by this SOP shall be conducted in accordance with IWS 11577 "Compliance Driven Groundwater Sampling and Water Level Measurement" at the Livermore Site and LLNL IWS 11343 "Routine Groundwater Sampling and Water Level Monitoring" at Site 300.

6.5 Purge Water Collection

At Site 300, the FSP must ensure that wells have sufficient collection drums available at the well head for purge water containment (SOP 4.7B, "Site 300 Treatment and Disposal of Well Development and Well Purge Fluids"). The quantity of purge water to be collected for each well is listed in the quarterly Sampling Plan or calculated by the SC for newly installed monitor wells.

The Livermore Site Field Personnel will tow a collection tanker with the sampling vehicle when necessary. Tankers and drums filled with purge water may not be left at the well location and will be logged and disposed of daily, when possible according to SOP 4.7A, "Livermore Site Treatment and Disposal of Well Development and Well Purge Fluids."

6.6 Operation

6.6.1 A Well Entry Logbook is kept in each well. Whenever a well is entered for any reason, record the date, the purpose, name of the operator, and any water level obtained in the logbook. Replace the logbook in the well when operations are complete. A logbook should be replaced when damaged. The damaged logbook should be given to the DMT for archival.

6.6.2 Calculate and record the amount of water in the well (casing volume) as described in steps A through E (see Attachment B, "Ground Water Sampling Data Sheet"):

A. Record the well ID, date, and Document Control Logbook number on the Ground Water Sampling Data Sheet.

B. Unlock the steel protective casing and obtain depth to water (in tenths of feet) in accordance with procedures specified in SOP 3.1, "Water-Level Measurements." Record this information on the Ground Water Sampling Data Sheet and the Well Entry Logbook as discussed previously.

C. Subtract the depth to water from the depth of casing (in tenths of feet). Make sure both measurements are referenced to the same point of measurement (POM). Record this result as water in casing (feet) on the Ground Water Sampling Data Sheet. Note: All well specification data are provided on the electronically generated Ground Water Sampling Data Sheets.

D. The casing diameter for each well can be found on the Ground Water Sampling Data Sheets.

Casing/Discharge line Diameter	Volume Factor
1.0 in.	**0.041**
1.5 in.	**0.092**
2 in.	**0.163**
3 in.	**0.37**
3.5 in.	**0.50**
4 in.	**0.65**
4.25 in.	**0.74**
4.5 in.	**0.83**
5 in.	**1.00**
6 in.	**1.47**
8 in.	**2.61**
10 in.	**4.08**

Note: For a discharge-line diameter not listed, consult the SC.

E. Multiply the feet of water in casing by the volume factor for each casing diameter. The result represents the amount of water in a single casing volume and should be recorded as Gallons/Casing Vol. on the Ground Water Sampling Data Sheet.

F. When conducting low-volume sampling assume that the discharge line is filled with water. Use the casing depth and multiply by the appropriate volume factor to determine the amount of purge water to evacuate.

6.6.3 Field parameter measurements (pH, specific conductance, oxidation/reduction potential (ORP), and temperature), flow rate (Q), depth to water and any visual observations such as outgassing, etc. are collected at specific intervals during the purging of a monitor well or at sample collection time based on the sampling methodology being used (See Attachment A, Methodology Sampling Codes).

A. 3-volume sampling event: field parameter measurements (pH, specific conductance, ORP, and temperature), flow rate (Q), depth to water and any visual observations such as outgassing, etc. recorded at the end of each casing volume.

B. 90% of one casing volume: 90% of one volume divided by three equal measurements (beginning and middle of purge, and at sample collection time).

C. Low volume: If purging a maximum of 2 to 3 discharge lines prior to sampling, field parameter measurements should be collected at sample collection time, when possible.

D. Specific-Depth Grab Samples: Consult the SC and Hydrogeologist for purging requirements. Field parameter measurements should be collected at sample collection time, when possible.

E. Domestic Well Grab Samples: Consult the SC and Hydrogeologist for purging requirements. Field parameter measurements should be collected at sample collection time, when possible.

6.6.4 Bailer Operation

Where approved by the SC, it is acceptable to use a ®Teflon, stainless steel, polyethylene, or polyvinyl chloride (PVC) bailer. Attachment D is a schematic of a typical bailer. Collection of an equipment blank sample may be necessary when using a non-dedicated bailer, consult SOP 4.9, "Collection of Field QC Samples" for this determination.

A. The retrieval rope should be securely attached to the bailer. A new rope should be used at each well, unless the bailer is dedicated. Dedicated bailers should be checked for cracks and breaks and replaced when necessary.

B. Lower the bailer gently into the well and begin water removal. Avoid unnecessary agitation of the water. Collect or dispose of purged water in acceptable containers as specified in SOP 4.7A (Livermore Site) or SOP 4.7B (Site 300).

C. Field measurements of pH, specific conductance, ORP, and temperature should be taken at least once per casing volume purged, as described in SOP 2.2, "Field Measurements on Surface and Ground Waters." Depth to water and visual observations, such as clarity and outgassing should also be made and recorded at each volume interval. If it is suspected that the well may go dry prior to the removal of three casing volumes, at least two sets of field measurements should be taken during the removal of the first casing volume.

D. When applicable, purge a minimum of three casing volumes, or until the pH, temperature, and specific conductance of the discharge water stabilize. Stabilization is reached when no upward or downward trends are apparent (pH is within 0.1 pH unit, temperature is within 0.5°C, and specific conductance is within plus or minus 3%). When sampling wells under RCRA (Resource Conservation and Recovery Act) guidelines, an additional set of field measurements should be taken at 2-minute to 3-minute intervals at the end of the third well casing volume and prior to sample collection. RCRA wells are identified in the quarterly sampling plan. As mentioned previously in this SOP under section 1.0 "Purpose", it is not always necessary to purge multiple casing volumes prior to sample collection. In instances where the SC has indicated that a grab sample is adequate, a specific-depth grab sample or bailed grab sample may be substituted for the 3 casing volume pre-sample purge, or other low-volume techniques.

E. If the well does not produce three casing volumes of water, SOP 2.7, "Pre-sample Purging and Sampling of Low-Yielding Monitor Wells" should be consulted.

6.6.5 Bladder Pump (Gas-Operated Positive Displacement Pump) Operation

A. On the sanitary seal of the wellhead, two quick-connect fittings should be visible. The discharge/sampling tube is suspended from the sanitary seal down into the well casing. See Attachment E for wellhead completion details.

B. Start up the gas-powered compressor controller assembly. In some cases, a compressed nitrogen cylinder may be used as a power source. Attach the compressor to the quick-connect fitting on the controller, ensuring the exhaust is downwind from the well. Remove the discharge/sampling tube and attach to the discharge quick-connect. Adjust bladder pump controller per equipment operation manual.

C. Begin water removal. If possible, the rate should be set so the screen section of the casing is not exposed to air. Collect or dispose of purged water in acceptable containers as specified in SOP 4.7A or 4.7B.

D. Measure the rate of discharge (Q) frequently by first determining the length of time in one cycle. The cycle begins when water first appears at the discharge tube and ends when it appears at the tube a second time. Then, using a graduated cylinder for measurement, note the amount of water collected (usually less than 500 ml/cycle). Divide 60 seconds (sec.) by the cycle time. Take this figure and multiply it by the mls collected. Multiply this figure by the conversion factor .264. Example: Cycle time = 17 sec. and ml/cycle = 500 ml; 60 divided by 17 = 3.5 × .500 = 1.76 × .264 = .465 gpm.

E. Take field measurements of pH, specific conductance, ORP, and temperature, flow rate (Q), depth to water and any visual observations such as outgassing, etc., at frequencies listed above in Section 6.6.3, and as described in SOP 2.2 (for exceptions to this frequency list, consult the SC). If it is suspected that water discharge will cease, due to the well going dry,

at least two sets of field measurements should be taken during the removal of the first casing volume.

F. When applicable, purge a minimum of three casing volumes, or until the pH, temperature, and specific conductance of the discharge water stabilize. Stabilization is reached when no upward or downward trends are apparent (pH is within 0.1 pH unit, temperature is within 0.5°C, and specific conductance is within plus or minus 3%). When sampling wells under RCRA (Resource Conservation and Recovery Act) guidelines, an additional set of field measurements should be taken at 2-minute to 3-minute intervals at the end of the third well casing volume and prior to sample collection. As mentioned previously in this SOP under Section 1.0 "Purpose", it is not always necessary to purge multiple casing volumes prior to sample collection.

G. If water discharge ceases prior to the removal of three casing volumes, SOP 2.7, should be consulted.

6.6.6 Electric Submersible Pump Operation

The dedicated pump assembly and sealed electric drive motor are submersed in the well. The pump is suspended by the discharge pipe, safety cable, and electric lead wires which are held in place by the sanitary seal. A portable generator provides power for the pump. On the sanitary seal of the wellhead, a capped discharge pipe and a capped sounding tube should be visible. The electrical cable to the pump is also fitted through the sanitary seal. The cable either has a dedicated control box or is completed with an outlet for a portable control box. The pump intake is typically placed in the middle of the screened interval for Livermore Site installations, but due to low-yielding aquifers is placed near the bottom of the screened interval at Site 300 locations. See Attachment F for wellhead completion details.

A. Place the generator downwind from the well. According to the manufacturer's recommendation the well should be purged at a discharge rate of no less than 1.2 gpm when using an electric submersible pump. Water levels should be monitored frequently to ensure the water level does not drop below the top of the screened interval, when possible. Attach the dedicated sample-tee (found inside the protective steel casing) to the discharge pipe. Plug the control box into the generator and start generator. Adjust the discharge rate so that the well will yield water without exposing the screen by partially closing the ball valve on the sample-tee. If using a rheostat equipped pump, the discharge rate is controlled by the pump speed on the controller unit. Purge the well as described above (Section 6.6.5 C, E, F, and G). Electrical equipment shall not be used in the rain.

6.6.7 Specific-Depth Grab Sampling Device Operation

A well with a dedicated system (Attachment G), such as the EasyPump, will include (at the surface) a spool with a pre-measured length of motor lead, attached to a low-voltage pump. There will be a quick disconnect low-voltage female plug adapter attached to the spool. The pump, motor lead and spool will be stored

within the stovepipe. For portable usage, the Field Personnel will attach a disposable sample capture chamber (modified double check-valve bailer) to the pump intake and affix the spool to a portable reel assembly. The device is lowered to a pre-determined depth specified by the SC and/or appropriate personnel, usually the mid-point of the screened interval. A low-voltage control box/power supply is then attached. The SC will have advised full or low-flow setting. These flow rates vary from 250 milliliters per minute at low flow to 8 liters per minute. The desired flow rate is set and the Field Personnel will activate the pump for a duration sufficient to "purge" or triple rinse the interior of the sample capture portion. The pump is deactivated, isolating the sample by means of dual check valves. The device is retrieved and the sample is obtained (refer to SOP 2.4, Section 6.5.6).

6.6.8 Portable Pump Assemblies

Bladder, electric submersible pumps, and specific-depth grab sampling devices are available as portable units. Portable pumps should be thoroughly decontaminated prior to use according to SOP 4.5, "General Equipment Decontamination." Collection of an equipment blank sample may be necessary when using a portable purging device. Consult SOP 4.9, "Collection of Field QC Samples" for this determination.

A. Slowly lower the pump assembly down until the pump is at the middle of the screened interval. On low-yielding aquifers, the pump should be placed just above the bottom of the well so that it can be completely evacuated. Check with the SC on placement of the pump intake.

B. For bladder pumps, attach the gas tube to the gas-powered controller compressor unit. Ensure that the unit is downwind from the well.

C. For electric submersible pumps, plug the control box to the appropriately rated generator. Ensure that the generator is downwind from the well.

D. Lower the specific-depth grab sampling device to middle of screened interval when possible and refer to Section 6.6.7 for operating instructions.

E. Purge the well and collect the purge water as described above under Section 6.6.5 C, E, F, and G.

6.7 Post Operation

6.7.1 Perform post operation activities as described in SOP 4.1.

6.7.2 Make copies of the Document Control Logbook pages (upon request) and Ground Water Sampling Data Sheets. Deliver copies to the SC.

6.7.3 The SC will deliver the original Ground Water Sampling Data Sheets to the DMT for archive. The DMT will provide copies to the appropriate Environmental Protection Department (EPD) Analyst, as necessary.

7.0 QA RECORDS

7.1. Ground Water Sampling Data Sheets

7.2. Document Control Logbooks

7.3. Well Entry Logbooks

8.0 ATTACHMENTS

Attachment A—Methodology Sampling Codes

Attachment B—Ground Water Sampling Data Sheet

Attachment C—Equipment Checklist

Attachment D—Schematic of a Typical Bailer

Attachment E—Wellhead Completion and Pump Placement for Bladder Pumps

Attachment F—Wellhead Completion and Possible Pump Placement for Electric Submersible Pumps

Attachment G—Well with Specific-Depth Grab Sampling Device

Attachment A

Methodology Sampling Codes

Methodology Sampling Codes

3VBA: 3 casing volume purge using a Bailer

3VBC: 3 volume purge, then sample Barcad

3VBP: 3 casing volume purge using a Bladder Pump

3VES: 3 casing volume purge using an Electric Submersible pump

3VVS: 3 casing volume purge using a variable speed pump

Note: Purging 3 casing volumes prior to sampling may be necessary at specific monitoring locations. Guard wells (wells used to monitor the leading edge of a plume) are sampled using this method, when possible.

90BA: 90% of 1 casing volume using a Bailer

90BP: 90% of 1 casing volume using a Bladder Pump

90ES: 90% of 1 casing volume using an Electric Submersible

90VS: 90% of 1 casing volume using a variable speed pump

Note: Purging 90% of 1 well volume prior to sampling is the method used at locations where there is insufficient yield to produce 3 well volumes prior to the well going dry.

LVBP: Low-Volume purge using a Bladder Pump

LVES: Low-Volume purge using an Electrical Submersible pump

LVVS: Low-Volume purge using a variable speed pump

LVAP: Low-Volume purge using an air driver piston pump

Note: Purging 2-3 discharge lines is a low-volume purging method applied to locations that will not sustain sufficient flow to perform a 90% purge or where waste minimization is a key factor in determining the sampling method.

GRBA: Grab sample using a Bailer

GRBP: Grab sample using a Bladder Pump

GRES: Grab sample using an Electrical Submersible

GROT: Grab sample using Other method (no purge device, i.e., spring sampling or offsite surveillance)

GRVS: Grab sample using a variable speed pump

GRAP: Grab sample using an air driver piston pump

GRWL: Grab sample using a Water Level Indicator (specifically for Tritium sampling)

Note: Purging prior to sampling is not performed due to water column being insufficient to apply preceding methods or when performing tritium sampling.

DOBA: Dry-out using a Bailer

DOBP: Dry-out using a Bladder Pump

DOES: Dry-out using an Electrical Submersible

90VS: Grab sample using a variable speed pump

Note: Drying out a well is a methodology applied when there is insufficient yield to produce 3 well volumes and when deemed necessary by the SL.

OTSM: Other sampling methodology

SDGS: Specific Depth using a device to collect sample from a specific depth without purging

Note: Sampling methodologies applied in any location specified by the SL or SC.

Attachment A. Methodology sampling codes.

Attachment B

Ground Water Sampling Data Sheet

ALL GROUND WATER SAMPLING DATA

Target Sample Date: 01-Apr-2001 Month: 5 Norm Qtr: 2 Norm Year: 2001

Date _____ LOG# _____ Well ID: NC7-69

LAB_LOC_ID: NC7-69-3VES Doc. Control Num.: _____

PURGING METHOD: GF Sample Status: 3VES CONTAMINANT PRESENT: ND

SCREENED INTERVAL: 128.400 – 148.400 PUMP INTAKE DEPTH: 146.30

DEPTH OF CASING: 148.800 CASING DIAMETER: 4.50

DEPTH TO WATER _____ VOLUME FACTOR: 0.826

WATER IN CASING (ft): _____ CASING VOL (Gal/Time): _____

TIME PUMP ON: _____ INITIAL FLOW RATE (Q=GPM): _____

TIME PUMP OFF: _____ MEASURED BY: GRAD. CYL. /BUCKET /FLOW METER & OTHER

TIME	Q	GAL PURGED	WELL VOLUMES	PH	TEMP C	SC	MV	OG	DTW

METER SERIAL # CALIBRATED SAMPLERS INITIAL/EMPLOYER _____

PROJECT: 3EMG

pH _____ 8908079 _____ YES/NO

SC _____ 8908079 _____ YES/NO

ORP _____ 8908079 _____ YES/NO

SAMPLE ID: (VERIFY) _____ TIME COLLECTED: _____

ANALYTICAL LAB	REQUESTED ANALYSES	QUANTITY	TYPE OF CONTAINERS
CALTEST	E200.7:K	1 × 1L	PLASTIC
CALTEST	E300.0:NO3	1 250 × mLs	PLASTIC
CALTEST	E601	6 40 × m1s	VOA VIAL
CALTEST	E8330:R+H	1 × 1L	NM AMBER GLASS
CALTEST	WGMGMET3	1 × 1L	PLASTIC
TNURICH	AS:UISO	2 × 1L	PLASTIC
TNURICH	E900	2 × 1L	PLASTIC
TNURICH	E200.7	4 × 40 m1s	VOA

Note:

Shaded items indicate data retrieved from database.

Attachment B. Ground Water Sampling Data Sheet.

Attachment C

Equipment Checklist

Equipment Checklist

The purpose of the list presented below is to aid Field Personnel in identifying those supplies necessary to conduct a particular field operation. It is not intended to be inclusive. It is the responsibility of Field Personnel to determine and obtain the supplies required for successful performance of assigned tasks.

____ Alconox (detergent)
____ All applicable documents (e.g., Sampling Plan, Well Specification Table, SOPs
____ Air tight plastic bags
____ Appropriate sample containers
____ Appropriate shipping documents
____ Bagged cubed or blue ice
____ Bailer and cotton or nylon bailing rope
____ Barricades/traffic cones/traffic vest
____ Beakers
____ Bound logbook
____ Bubble wrap or necessary packaging
____ Calculator
____ Chain-of-Custody (CoC) forms
____ Clipboard
____ Cold weather gear/rain suit (if necessary)
____ Coolers
____ Distilled (organic-free) water
____ Drinking water
____ Duct tape
____ Ear plugs
____ Field forms
____ First aid kit
____ Fittings (e.g., quick disconnect fittings for well wizards)
____ Generator
____ Graduated cylinder/bucket
____ Hat and work gloves
____ Pens, pencils, permanent markers
____ pH, specific conductance, temperature meters and flow cell (ASTM approved)
____ Personal protective equipment
____ Preprinted labels
____ Radio, cell phone
____ Safety shoes/boots
____ Sample-tee
____ Snake guards
____ Stop watch
____ Sun screen
____ Tape measure (tenths)
____ Temperature blank
____ Teflon tape

Equipment Checklist (cont.)

____ Tool box
____ Trip blanks/field blanks
____ Volume conversion chart
____ Water level indicator

Attachment D

Schematic of a Typical Bailer

ERD-LSR-07-0064x

Attachment D. Schematic of a Typical Bailer.

Attachment E

Wellhead Completion and Pump Placement for Bladder Pumps

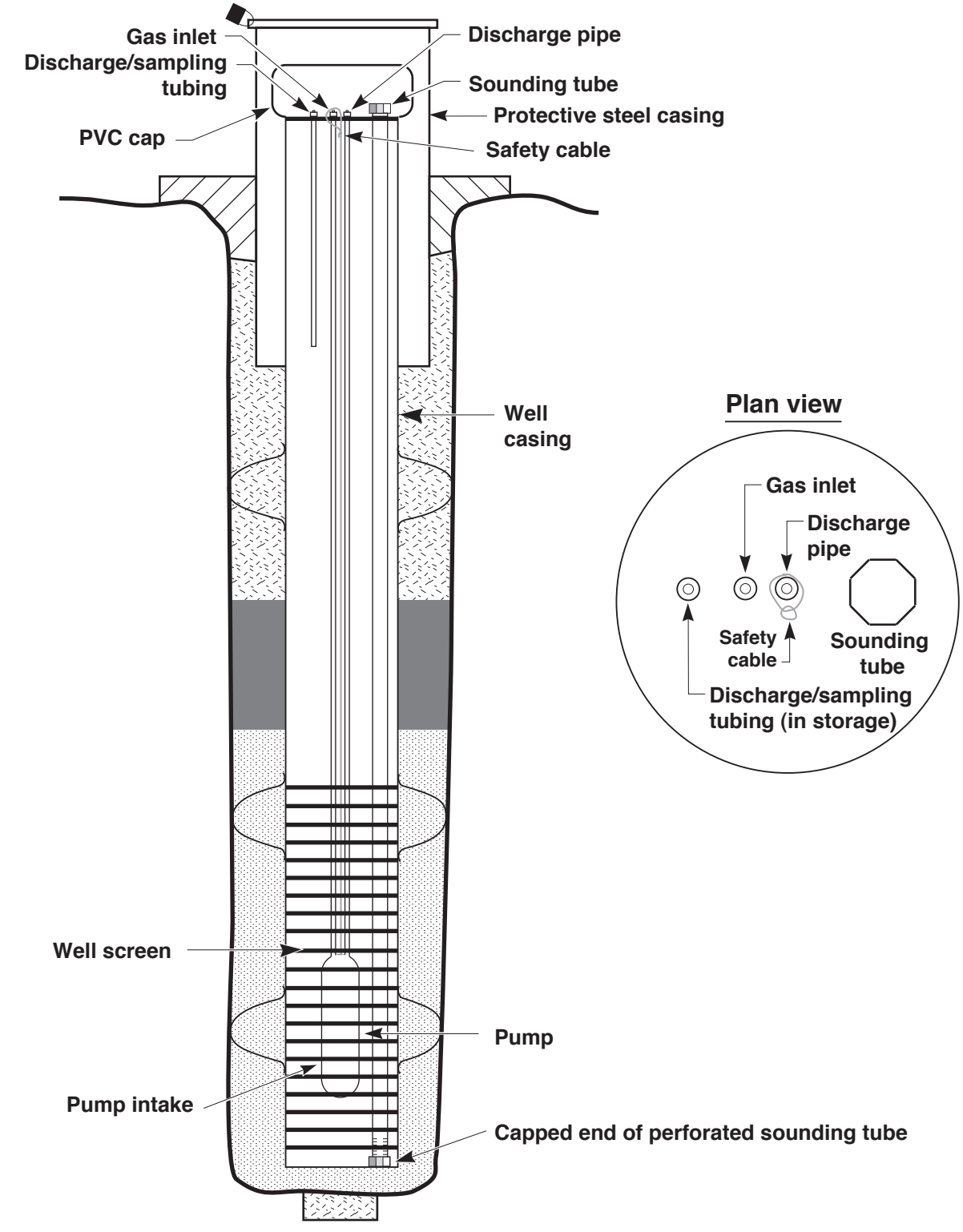

Attachment E. Wellhead completion and pump placement for bladder pumps.

Attachment F

Wellhead Completion and Possible Pump Placement for Electric Submersible Pumps

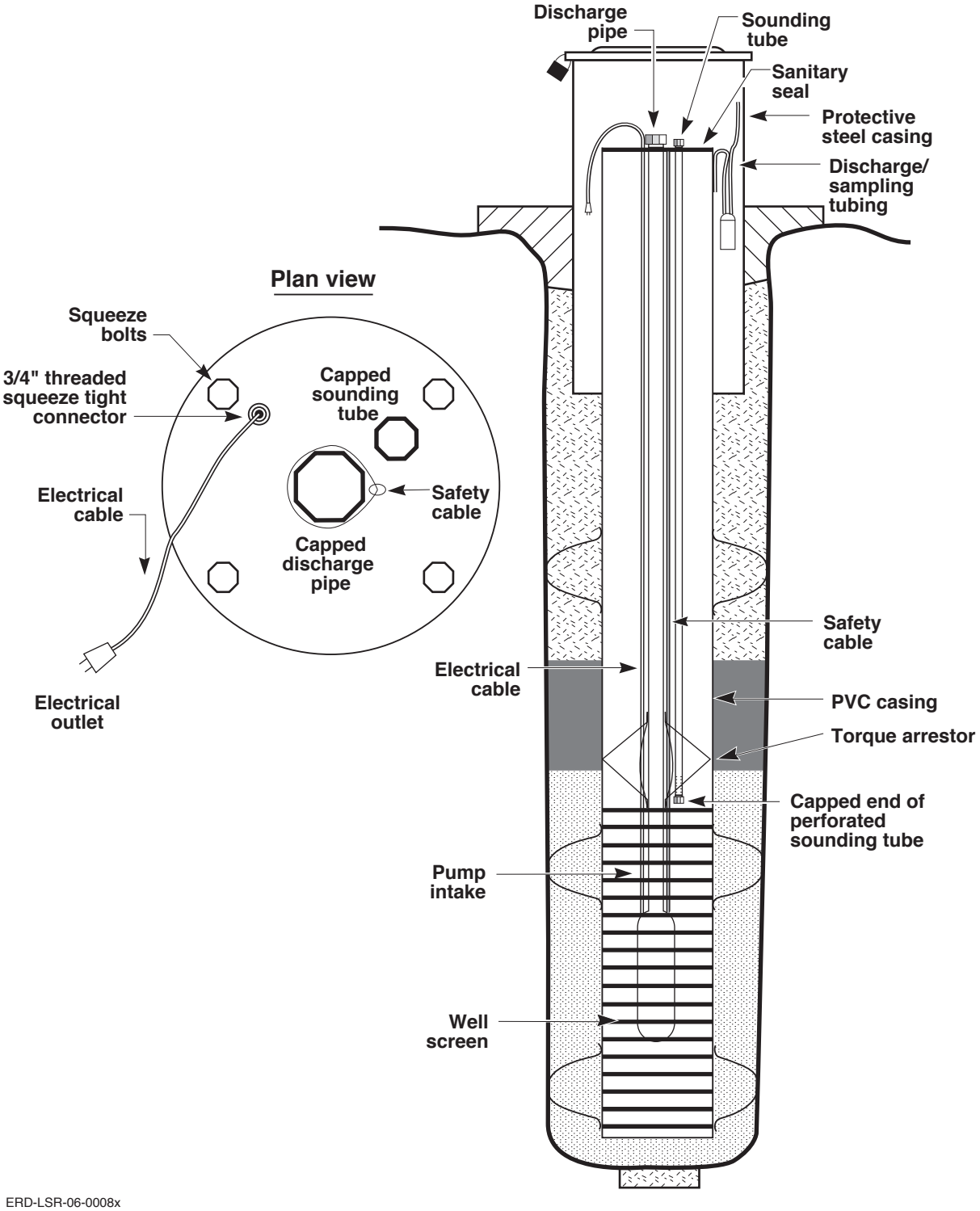

ERD-LSR-06-0008x

Attachment F. Wellhead completion and possible pump placement for electric submersible pumps.

Attachment G

Well with Specific-Depth Grab Sampling Device

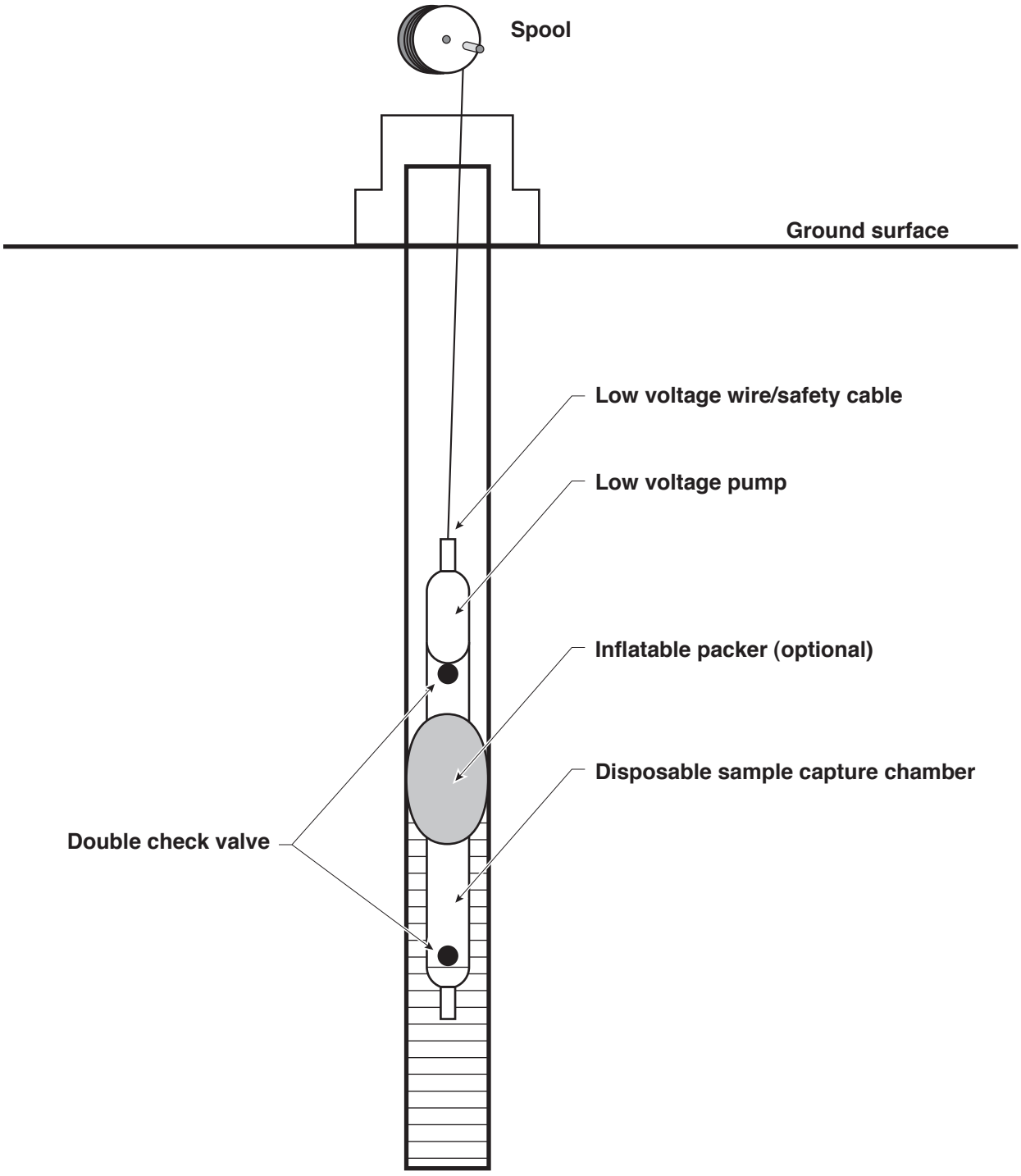

ERD-LSR-06-0009x

Attachment G. Well with specific-depth grab sampling device.

LLNL Environmental Restoration Department (ERD)
Standard Operating Procedure (SOP)

ERD SOP 2.2: Field Measurements on Surface and Ground Waters—Revision: 5

AUTHOR(S):
V. Dibley, R. Goodrich
S. Gregory, and G. Howard

ENVIRONMENTAL RESTORATION DEPARTMENT
CONTROLLED COPY
_____
THIS IS A RED STAMP
ERD

APPROVALS:	Date
Jesse Yow Department Manager	1/7/09
Ed Folan Engineering & Operations Division Leader	11-17-08

CONCURRENCE:	Date
Rebecca Goodrich QA Implementation Coordinator	12/3/08

Type of Procedure (per ES&H Manual, Document 3.4)

☒ Informational Use ☐ General Use ☐ Continuous Use

1.0 PURPOSE

The purpose of this procedure is to ensure that water chemistry measurements (pH, temperature, specific conductance, oxidation/reduction potential) on surface and ground water, and water-level measurement are properly performed and documented.

2.0 APPLICABILITY

This procedure is applicable when measuring water quality parameters during ground water monitoring, treatment facility sampling, and special studies. ERD work activities are conducted within the framework of the institutional Integrated Safety Management System (ISMS). The

Environmental Management System (EMS) is a component of the ISMS, which is also supported during the planning, performing, and evaluation of the work processes.

3.0 REFERENCES

3.1 Korte, N. and P. Kearl (1984), *Procedures For The Collection and Preservation of Ground Water and Surface Water Samples and for the Installation of Monitoring Wells*, U.S. Department of Energy, Grand Junction, Colo.

3.2 U.S. EPA (1983), *Methods for Chemical Analysis of Water and Wastes*, Washington, D.C. (EPA-600/4-79-020).

3.3 U.S. EPA (1992), *RCRA Ground-Water Monitoring: Draft Technical Guidance*, Washington, D.C. (EPA/530-R-93-001).

4.0 DEFINITIONS

See SOP Glossary.

5.0 RESPONSIBILITIES

5.1 Department Manager (DM)

The DM's responsibility is to ensure that all activities performed by ERD at the Livermore Site and Site 300 are performed safely and comply with all pertinent regulations and procedures, and provide the necessary equipment and resources to accomplish the tasks described in this procedure.

5.2 Project Leader (PL)

The PL's responsibility is to ensure that all activities are performed safely and comply with all pertinent regulations and procedures, work is authorized through an Integration Work Sheet (IWS), and there is sufficient funding to initiate the work.

5.3 Engineering and Operations Division Leader (EODL)

The EODL's responsibility is to ensure that proper procedures are followed for activities (e.g., construction, activation, facility operation and sampling).

5.4 Sample Coordinator (SC)

The SC's responsibilities are to review the incoming LLNL Ground Water Sampling Data Sheets.

5.5 Field Personnel (FP)

The FP are responsible for collecting and measuring water quality parameters during sampling activities according to the guidelines herein.

5.6 Data Management Team (DMT)

The DMT is responsible for generating routine quarterly sampling plans and distributing to the Sampling Coordinator to supply to Field Personnel. DMT is also responsible for the disposition of the original documents received as a result of performing work activities described by this SOP.

6.0 PROCEDURES

6.1 When to Collect Field Measurements

6.1.1 Quarterly Ground Water Sampling. The quarterly sampling plan provided by the SC to the Field Personnel for routine ground water sampling list the wells for which field chemistry measurements need to be obtained, as well as other purging and sampling information.

6.1.2 Treatment Facility Sampling. The quarterly sampling plan for treatment facilities determined by waste discharge permits list the locations for which field chemistry measurements need to be taken.

6.1.3 Special Studies. During special studies, field measurements may be collected per the experiment plan.

6.2 Preparation

6.2.1 Prior to commencement of field activities, perform preparation activities described in SOP 4.1, "General Instructions for Field Personnel," including participation in the ERD Field Investigation Orientation Lesson Plan (course number EP7033-05).

6.3 Safety Considerations

6.3.1 Personnel shall meet all training requirements; review the appropriate Site Safety Plan (SSP), all applicable SOPs, and Integration Work Sheets (IWSs) prior to performing work.

6.3.2 Work activities described by this SOP shall be conducted in accordance with IWS 11577 "Compliance Driven Groundwater Sampling and Water Level Measurement" at the Livermore Site and LLNL IWS 11343 "Routine Groundwater Sampling and Water Level Monitoring" at Site 300.

6.4 Field Instrument Calibration/Maintenance

6.4.1 Assemble the appropriate water sampling equipment and field chemistry instrumentation according to Attachment A. Check to ensure that equipment and instruments are properly working.

6.4.2 Perform required maintenance according to SOP 4.8, "Calibration/Verification and Maintenance of Field Instruments Used in Measuring Parameters of Surface Water, Ground Water, and Soils.

6.4.3 Calibrate or verify the calibration of field chemistry instrumentation according to SOP 4.8. Use calibrated instruments only.

6.5 Field Measurements

6.5.1 Field Measurement Documentation. Initiate the proper sample documentation as described in SOP 4.2, "Sample Control and Documentation." The following data fields should be filled in on the Ground Water Sampling Data Sheet and/or in the appropriate field logbook when collecting water chemistry measurements using the following instruments:

A. Specific Conductance Meter ID. Identification, model, or serial number of specific conductivity meter being used.

B. pH Meter ID. Identification, model, or serial number of pH meter being used.

6.5.2 Collecting Field Measurements

A. pH Measurements

Take pH measurements per instrument operating instructions. pH paper may be used when applicable.

B. Temperature

Temperature readings are usually obtained from the temperature probe used to compensate the pH measurements and can be read directly off the pH meter. A separate temperature probe may be used and should read to the 0.1°C.

C. Specific Conductivity (SC)

Measure conductivity in a clean container that has been rinsed with the liquid to be sampled or using a flow-through cell per operator instructions.

D. Dissolved Oxygen (DO)

Measure dissolved oxygen per instrument operating instructions.

E. Oxidation/Reduction Potential (ORP)

Measure oxidation/reduction potential per instrument operating instructions.

F. Depth to Water

Measure depth to water per SOP 3.1, "Water-Level Measurements."

6.5.4 Decontaminate instrument as described in SOP 4.5, "General Equipment Decontamination."

6.5.5 Inventory sampling equipment and supplies. Repair or replace all expendable, broken or damaged equipment and return to storage area.

7.0 QA RECORDS

7.1 Document Control Logbooks

7.2 Ground Water Sampling Data Sheets

8.0 ATTACHMENT

Attachment A—Equipment Checklist

Attachment A

Equipment Checklist

Equipment Checklist

The purpose of the list presented below is to aid Field Personnel in identifying those supplies necessary to conduct a particular field operation. It is not intended to be all inclusive. It is the responsibility of Field Personnel to determine and obtain the supplies required for successful performance of assigned tasks.

_____ Beakers
_____ Buffer solution
_____ Distilled water
_____ DO meter
_____ ORP meter
_____ SC meter
_____ Gloves
_____ KCL solution
_____ pH meter or paper
_____ Squirt bottle
_____ Thermometer
_____ Tissues
_____ Water-level indicator

LLNL Environmental Restoration Department (ERD)
Standard Operating Procedure (SOP)

ERD SOP 2.3: Sampling Monitor Wells with Bladder Pumps, Electric Submersible Pumps, and Specific-Depth Grab Sampling Devices—Revision: 6

AUTHOR(S):
R. Goodrich and G. Howard

APPROVALS: **Date**

Jean Yow 1/7/09
Department Manager

Ed Folsom 11-17-08
Engineering & Operations Division Leader

CONCURRENCE: **Date**

Rebecca Goodrich 12/3/08
QA Implementation Coordinator

Type of Procedure (per ES&H Manual, Document 3.4)

☒ **Informational Use** ☐ **General Use** ☐ **Continuous Use**

1.0 PURPOSE

The purpose of this SOP is to describe the procedure for sampling wells with bladder pumps, electric submersible pumps, and specific-depth grab sampling devices and to ensure that ground water samples are obtained in a credible, uniform, and well-documented manner when using these devices. It assumes the well has been properly purged according to SOP 2.1, "Pre-sample Purging of Wells." A brief description of sampling devices, and the installation thereof, is given in SOP 2.8, "Installation of Dedicated Sampling Devices."

2.0 APPLICABILITY

This SOP applies to all Field Personnel involved in operating dedicated and/or portable electric submersible pumps, bladder pumps, or specific-depth grab sampling devices, etc. used during ground water sampling events. ERD work activities are conducted within the framework of the institutional Integrated Safety Management System (ISMS). The Environmental Management System (EMS) is a component of the ISMS, which is also supported during the planning, performing, and evaluation of the work processes.

3.0 REFERENCES

3.1 deVera, E.R., B.P. Simmons, R.D. Stephen, and D.L. Storm (1980.), *Samplers and Sampling Procedures for Hazardous Waste Streams*, U.S. EPA, Washington, D.C. (EPA-600/2-80-018).

3.2 Ford, P.J., P.J. Tarina, and D.E. Seely (1984), *Characterization of Hazardous Waste Sites—A Methods Manual, 302. Vol. II Available Sampling Methods,* 2nd ed., U.S. EPA, Washington, D.C. (EPA-600/4-84/076).

3.3 Korte, N. and D. Ealey (1983), *Procedures for Field Chemical Analyses of Water Samples,* U.S. Department of Energy, GJ/TMC-07, Technical Measurements Center, Grand Junction Project Office, Grand Junction, Colo.

3.4 Korte, N. and P. Kearl (1985), *Procedures for the Collection and Preservation of Groundwater and Surface Water Samples and for the Installation of Monitoring Wells,* Second Edition, U.S. Department of Energy, GJ/TMC-08, Technical Measurements Center, Grand Junction Projects Office, Grand Junction, Colo.

3.5 Morse, S.I. (1997), San Francisco Bay Regional Water Quality Control Board, Toxics Cleanup Division; letter to Interested Parties. Subject: *Utilization of Non-Purge Approach for Sampling of Monitoring Wells Impacted by Petroleum Hydrocarbons, BTEX, and MTBE,* File: 1123.64, January 31, 1997.

3.6 Robbins, G.A. and J.M. Martin-Hayden (1991), Mass Balance Evaluation of Monitoring Well Purging: Part 1. Theoretical Models and Implications for Representative Sampling, *J. Contam. Hydrol.* 8, 203–224.

3.7 Schilling K.E. (1995), Low-Flow Purging Reduces Management of Contaminated Groundwater, *Environmental Protection*, December 1995.

3.8 U.S. Department of the Interior (n.d.), *National Handbook of Recommended Methods for Water-Data Acquisition*, Washington, D.C.

3.9 U.S. EPA (1983), *Methods for Chemical Analysis of Water and Wastes,* Washington, D.C. (EPA-600/4-79-020).

3.10 U.S. EPA (1985), *Practical Guide for Groundwater Sampling*, Washington, D.C., (EPA-600/2-85/104).

3.11 U.S. EPA (1986), *RCRA Groundwater Monitoring Technical Enforcement Guidance Document,* Washington, D.C. (OSWER-9950.1).

3.12 U.S. EPA (1992) *RCRA Groundwater Monitoring: Draft Technical Guidance*, Washington, D.C. (EPA/530-R-93-001).

3.13 U.S. EPA (1994), *Test Methods for Evaluation of Solid Waste,* Third Edition, Washington, D.C. (EPA-SW-846).

3.14 U.S. Environmental Protection Agency (EPA) (1996), Low-Flow (Minimal Drawdown) Ground-Water Sampling Procedures, *Ground Water Issue*, EPA/540/S-95/504.

3.15 U.S. Environmental Protection Agency (EPA) (1995), *Use of Low-Flow Methods for Ground Water Purging and Sampling: An Overview*, Quick Reference Advisory (December 1995).

4.0 DEFINITIONS

See SOP Glossary.

5.0 RESPONSIBILITIES

5.1 Department Manager (DM)

The DM's responsibility is to ensure that all activities performed by ERD at the Livermore Site and Site 300 are performed safely and comply with all pertinent regulations and procedures, and provide the necessary equipment and resources to accomplish the tasks described in this procedure.

5.2 Project Leader (PL)

The PL's responsibility is to ensure that all activities are performed safely and comply with all pertinent regulations and procedures, work is authorized through an Integration Work Sheet (IWS), and there is sufficient funding to initiate the work.

5.3 Engineering and Operations Division Leader (EODL)

The EODL's responsibility is to ensure that proper procedures are followed for activities (e.g., construction, activation, facility operation and sampling).

5.4 Site Safety Officer (SSO)

The SSO's responsibility is to ensure that fieldwork is conducted safely and in compliance with applicable IWSs, Site Safety Plans, SOPs, and any other applicable safety related documentation.

5.5 Sampling Coordinator (SC)

The SC's responsibility is to supply a quarterly Sampling Plan to the Field Personnel and track sample collection throughout the quarter to ensure completion of the sampling plan within the specified sampling quarter.

5.6 Field Personnel (FP)

The FP are responsible for the safe completion of evacuating and sampling ground water monitor wells according to guidelines set forth by this procedure and associated SOPs.

5.7 Field Support Personnel (FSP)

The FSP are responsible for providing the appropriate equipment, collection devices, and general field support to assure that field activities are performed in a timely and efficient manner. FSP are also responsible for adhering to all applicable ERD SOPs.

6.0 PROCEDURES

6.1 Preparation

6.1.1 Prior to commencement of field activities, perform preparation activities described in SOP 4.1, "General Instructions for Field Personnel," including participation in the ERD Field Investigation Orientation Lesson Plan (course number EP7033-05).

6.1.2 Review all pertinent sampling information such as the quarterly Sampling Plan and electronically generated Ground Water Sampling Data Sheets (SOP 2.1, Attachment B).. The plan contains the following information:

- Locations to be sampled.
- Proposed sampling methods (See SOP 2.1, Attachment A, Methodology Sampling Codes).
- Requested analyses.
- Contract analytical laboratory (CAL) to which samples are to be sent for analyses.
- Estimated amount of purge water to be collected.
- Current technical information for each well.

6.1.3 Obtain appropriate data collection forms e.g., Chain-of-Custody (CoC) forms, Ground Water Sampling Data Sheets (SOP 2.1, Attachment B), assigned Document Control Logbook, labels, and any necessary shipping forms. Instructions for completing the logbook entries and field forms are provided in SOP 4.2, "Sampling Control and Documentation."

6.1.4 Compile all necessary equipment and instrumentation for sampling according to Attachment C, Equipment Checklist in SOP 2.1.

6.1.5 The appropriate number and type of sample containers needed for the sampling event should be obtained from the sample bottle inventory. The type of analysis for which a sample is being collected determines the type of bottle, preservative, holding time, and filtering requirement. See SOP 4.3, "Sample Containers and Preservation."

6.1.6 The appropriate personnel should keep a sufficient stock of sample containers and maintain an inventory of supplies, e.g., trip blanks, field blank water ordered from the contract analytical laboratory (CAL) or B151 onsite lab, plastic bags, etc., to ensure adequate sampling supplies are available at all times.

6.1.7 The Administrative Escort Services must be given a 24-hour notice before work is scheduled in restricted areas. If appropriate, arrange access to sampling areas through the Facility Point of Contact (FPOC), the Functional Area Supervisor (FAS) or the control point Operator per SOP 4.1, "General Instructions for Field Personnel."

6.1.8 Routine maintenance of ground water monitor wells and equipment such as generators and well-wizard controllers should be performed on a quarterly basis, when possible as deemed by SOP 2.12, "Ground Water Monitor Well and Equipment Maintenance." Prior to usage in the field, assigned sampling personnel should check equipment for cleanliness, proper operation, and ensure that the batteries are charged and the fittings are secure. Use gloves when handling compressors and generators, and dispose of them immediately to avoid possible sample contamination.

6.1.9 Fill out initial information on the Ground Water Sampling Data Sheet and Document Control Logbook per instructions in SOP 4.2.

6.1.10 Organize sampling route.

The SC may specify the order in which the wells are to be sampled. Complete an entire treatment facility or study area before beginning the next, when possible.

Sample wells working from the least contaminated to the most contaminated, when it is practical to do so. When it is not practical to do so, be sure and follow proper decontamination procedures before moving on to the next sample location.

6.2. Safety Considerations

6.2.1 Personnel shall meet all training requirements; review the appropriate Site Safety Plan (SSP), all applicable SOPs, and Integration Work Sheets (IWSs) prior to performing work.

6.2.2 Work activities described by this SOP shall be conducted in accordance with IWS 11577 "Compliance Driven Groundwater Sampling and Water Level Measurement" at the Livermore Site and LLNL IWS 11343 "Routine Groundwater Sampling and Water Level Monitoring" at Site 300.

6.3 Purge Water Collection

6.3.1 At Site 300, the Field Support Personnel must ensure that wells have sufficient collection drums available at the wellhead for purge water containment (SOP 4.7B, "Site 300 Treatment and Disposal of Well Development and Well Purge Fluids"). The quantity of purge water to be collected for each well is listed in the quarterly sampling plan or calculated by the SC for newly installed monitor wells.

6.3.2 The Livermore Site field personnel will tow a collection tanker with the sampling vehicle when necessary. Tankers and drums filled with purge water may not be

left at the well location and will be logged and disposed of daily, when possible according to SOP 4.7A, "Livermore Site Treatment and Disposal of Well Development and Well Purge Fluids."

6.4 Operation

6.4.1 Once pre-sample purging is complete according to SOP 2.1, sampling may begin. Wear new disposable gloves during sampling. According to SOP 2.2, "Field Measurements on Surface and Ground Waters," temperature, pH, ORP, and specific conductance should be measured immediately prior to sampling. Instruments should be calibrated according to SOP 4.8, "Calibration and Maintenance of Field Instruments Used in Measuring Parameters of Surface and Ground Water and Soils."

6.4.2 Refer to the operators manual for additional instructions on operating specific types of equipment.

6.4.3 Monitor wells are sampled from the discharge tubing immediately after the final field measurements are taken (after presample purging, if applicable). Samples requiring filtration will be performed by the analytical lab upon receipt of the samples when requested (Refer to SOP 2.4, Section 6.6.8) on the CoC.

6.4.4 Collect samples directly in containers as specified in SOP 4.3, "Sample Containers and Preservation." If sampling for volatile organic compounds (VOCs), refer to SOP 2.6, "Sampling for Volatile Organic Compounds." Fill the appropriate sample containers by allowing discharge to flow gently down the side of the bottle with minimal entry turbulence. The flow should not be excessive, but the sample should be obtained in a timely manner (SOP 2.6). Do not allow the discharge tube to come in contact with the sample container.

6.4.5 Samples should be obtained in order of volatility; VOCs collected first, followed by semi-VOCs, inorganics, and radiologicals. All samples should be placed in airtight plastic bags. The samples requiring preservation of 4°C should be cooled by using blue ice packs in airtight plastic bags or bagged ice cubes. Loose ice may be used when samples need to be rapidly cooled, but should be replaced with blue ice before shipping.

6.5 Post Operation

6.5.1 Perform post operation activities per SOP 4.1.

6.5.2 Before leaving the sampling location, verify that the appropriate samples have been collected according to the samples scheduled on the Ground Water Sampling Data Sheets.

6.5.3 Prior to sampling another site and to prevent cross contamination of equipment between locations, thoroughly decontaminate all equipment that is not dedicated according to SOP 4.5, "General Equipment Decontamination."

6.5.4 Complete the appropriate Ground Water Sampling Data Sheet and record sampling information in the assigned Document Control Logbook (SOPs 2.1 and 4.2).

6.5.5 Verify that the CoC is appropriately completed per SOP 4.2. Indicate any special instructions in the Remarks Section of the CoC. Such instructions may include a request for the laboratory to filter and preserve the sample upon receipt or to analyze trip blank only if hits are detected in associated sample(s).

6.5.6 Deliver Ground Water Sampling Data Sheets and CoC forms to the SC daily. Provide copies to the Technical Release Representative (TRR) daily if possible, but no less often than once per week.

6.5.7 The SC will retain a copy of the original forms (CoC, Ground Water Sampling Data Sheets), and provide the originals to the Data Management Team (DMT) for final archive. The DMT will provide copies of the forms to the appropriate Environmental Protection Department Analyst, as necessary.

6.5.8 Leave routine samples and proper documentation in the environmental sample lock-box for the CAL. Field Personnel will ship samples and/or distribute to the appropriate laboratories. Ensure that the samples requiring refrigeration remain at 4°C ± 2°C, but do not allow them to freeze. Always ensure that proper chain of custody is maintained.

7.0 QA RECORDS

7.1 Ground Water Sampling Data Sheets

7.2 Document Control Logbooks

7.3 Chain-of-Custody Forms

8.0 ATTACHMENTS

Not applicable.

LLNL Environmental Restoration Department (ERD)
Standard Operating Procedure (SOP)

ERD SOP 2.4: Sampling Monitor Wells with a Bailer—Revision: 7

AUTHOR(S):
R. Goodrich

ENVIRONMENTAL RESTORATION DEPARTMENT
CONTROLLED COPY
_____
THIS IS A RED STAMP
ERD

APPROVALS:	Date
Jesse Yow Department Manager	1/7/09
Ed Folson Engineering & Operations Division Leader	11-17-08

CONCURRENCE:	Date
Rebecca Goodrich QA Implementation Coordinator	12/3/08

Type of Procedure (per ES&H Manual, Document 3.4)

☒ Informational Use ☐ General Use ☐ Continuous Use

1.0 PURPOSE

The purpose of this SOP is to provide guidance on collecting a representative ground water sample using a bailer.

2.0 APPLICABILITY

This procedure applies to all Field Personnel using a bailer to purge and collect ground water samples from a monitoring well. ERD work activities are conducted within the framework of the institutional Integrated Safety Management System (ISMS). The Environmental Management System (EMS) is a component of the ISMS, which is also supported during the planning, performing, and evaluation of the work processes.

3.0 REFERENCES

3.1 deVera, E.R., B.P. Simmons, R.D. Stephen, and D.L. Storm (1980), *Samplers and Sampling Procedures for Hazardous Waste Streams*, U.S. EPA, Washington, D.C. (EPA-600/2-80-018).

3.2 Ford, P.J., P.J. Tarina, and D.E. Seely (1984), *Characterization of Hazardous Waste Sites—A Methods Manual, 302. Vol. II Available Sampling Methods*, Second Edition, U.S. EPA, Washington, D.C. (EPA-600/4-84/076).

3.3 Korte, N. and D. Ealey (1983), *Procedures for Field Chemical Analyses of Water Samples*, U.S. Department of Energy, GJ/TMC-07, Technical Measurements Center, Grand Junction Project Office, Grand Junction, Colo.

3.4 Korte, N. and P. Kearl (1985), *Procedures for the Collection and Preservation of Groundwater and Surface Water Samples and for the Installation of Monitoring Wells*, Second Edition, U.S. Department of Energy, GJ/TMC-08, Technical Measurements Center, Grand Junction Projects Office, Grand Junction, Colo.

3.5 National Council of the Paper Industry for Air and Stream Improvement, Inc. (1982), A Guide to Groundwater Sampling, National Council for the Paper Industry Technical Bulletin No. 362.

3.6 U.S. Department of the Interior Publication, (n.d.), *National Handbook of Recommended Methods for Water-Data Acquisition*, Washington, D.C.

3.7 U.S. EPA (1983), *Methods for Chemical Analysis of Water and Wastes*, Washington, D.C. (EPA-600/4-79-020).

3.8 U.S. EPA (1994), *Test Methods for Evaluation of Solid Waste*, Third Edition, Washington, D.C. (EPA-SW-846).

3.9 U.S. EPA (1985), *Practical Guide for Groundwater Sampling*, Washington, D.C. (EPA-600/2-85/104).

3.10 U.S. EPA (1986), *RCRA Groundwater Monitoring Technical Enforcement Guidance Document*, Washington, D.C. (OSWER-9950.1).

3.11 U.S. EPA (1992) *RCRA Groundwater Monitoring: Draft Technical Guidance*, Washington, D.C. (EPA/530-R-93-001).

4.0 DEFINITIONS

See SOP Glossary.

5.0 RESPONSIBILITIES

5.1 Department Manager (DM)

The DM's responsibility is to ensure that all activities performed by ERD at the Livermore Site and Site 300 are performed safely and comply with all pertinent regulations and procedures, and provide the necessary equipment and resources to accomplish the tasks described in this procedure.

5.2 Project Leader (PL)

The PL's responsibility is to ensure that all activities are performed safely and comply with all pertinent regulations and procedures, work is authorized through an Integration Work Sheet (IWS), and there is sufficient funding to initiate the work.

5.3 Engineering and Operations Division Leader (EODL)

The EODL's responsibility is to ensure that proper procedures are followed for activities (e.g., construction, activation, facility operation and sampling).

5.4 Sampling Coordinator (SC)

The SC's responsibility is to supply a quarterly Sampling Plan to the Field Personnel and track sample collection throughout the quarter to ensure completion of the sampling plan within the specified sampling quarter.

5.5 Field Personnel (FP)

The FP are responsible for the safe completion of evacuating and sampling ground water monitor wells according to guidelines set forth by this procedure and associated SOPs.

5.6 Field Support Personnel (FSP)

The FSP are responsible for providing the appropriate equipment, collection devices, and general field support to assure that field activities are performed in a timely and efficient manner. Field support personnel are also responsible for adhering to all applicable ERD SOPs.

6.0 PROCEDURES

6.1 Bailer Construction

Where approved by the SC, it is acceptable to use a ®Teflon, stainless steel, or polyethylene, or polyvinyl chloride (PVC) bailer. SOP 2.1: "Presample Purging of Wells," Attachment D is a schematic of a typical bailer. Collection of an equipment blank sample may be necessary when using a non-dedicated bailer, consult SOP 4.9 "Collection of Field QC Samples" for this determination.

6.2 Discussion

Bailers are useful tools for the collection of grab samples. Excessive agitation of the ground water should be avoided since this action results in aeration of the ground water sample. Unnecessary agitation of the ground water can be minimized by gently lowering the bailer into the well (not dropping it), and by using a bailer that can be fitted with a bottom-emptying device. Attachment D in SOP 2.1 contains a schematic of a typical bailer and a bottom-emptying device that slips into the bottom opening.

6.3 Preparation

6.3.1 Prior to commencement of field activities, perform preparation activities described in SOP 4.1, "General Instructions for Field Personnel," including participation in the ERD Field Investigation Orientation Lesson Plan (course number EP7033-05).

6.3.2 Review all sampling information, such as the quarterly sampling plan and electronically generated ground water sampling data sheets. The plan contains the following information:

- Locations to be sampled.
- Proposed sampling methods (See SOP 2.1, Attachment A, Methodology Sampling Codes).
- Requested analyses.
- Contract analytical laboratory (CAL) to which samples are to be sent for analyses.
- Estimated amount of purge water to be collected.
- Current technical information for each well.

6.3.3 Obtain appropriate data collection forms, e.g., Chain-of-Custody [CoC] forms, Ground Water Sampling Data Sheets (SOP 2.1, Attachment B), assigned Document Control Logbook, labels, and any necessary shipping forms. Instructions for completing the logbook entries and field forms are provided in SOP 4.2, "Sampling Control and Documentation." Instructions for completing the logbook entries and field forms are provided in SOP 4.2, "Sample Control and Documentation. Consult with the SC for the appropriate pre-sample purging method to apply to the site if it is not indicated on the sampling plan.

6.3.4 The appropriate number and type of sample containers needed for the sampling event should be obtained from the sample bottle inventory. The type of analysis for which a sample is being collected determines the type of bottle, preservative, holding time, and filtering requirement. See SOP 4.3, "Sample Containers and Preservation."

6.3.5 The appropriate personnel should keep a sufficient stock of sample containers and maintain an inventory of supplies, e.g., trip blanks, field blank water ordered from the contract analytical laboratory (CAL) or B151 onsite lab, plastic bags, etc., to ensure adequate sampling supplies are available at all times.

6.3.6 Obtain the line (nylon, polypropylene, cotton) or measured tape on a spool to be used when lowering the bailer into the well. The line used for bailing should be new or dedicated to the monitor well to be sampled.

6.3.7 The analytical labs should be notified when collecting samples with short holding times (e.g., hexavalent chromium, fecal and total coliform) or samples needing analyzed on a rush turn-around-time, e.g., 24h, 10d, etc. to ensure analysis can be performed.

6.3.8 Organize sampling route.

The SC may specify the order in which the wells are to be sampled. Complete an entire treatment facility or study area before beginning the next, when possible.

Sample wells working from the least contaminated to the most contaminated, when it is practical to do so. When it is not practical to do so, be sure and follow proper decontamination procedures before moving on to the next sample location.

6.3.9 The Administrative Escort Services must be given a 24-hour notice (at a minimum) before work is scheduled in restricted areas.

6.3.10 Decontaminate non-dedicated bailers according to SOP 4.5, "General Equipment Decontamination." Bailers should be checked for cracks and breaks that could cause sample and/or bailer loss. Ensure that new, clean line is used and is cut to the appropriate length according to the casing depth of the well.

6.3.11 Record the required information on the Ground Water Sampling Data Sheet and Water Sampling Logbook per the instructions in SOP 4.2, "Sample Control and Documentation."

6.4. Safety Considerations

6.4.1 Personnel shall meet all training requirements; review the appropriate Site Safety Plan (SSP), all applicable SOPs, and Integration Work Sheets (IWSs) prior to performing work.

6.4.2 Work activities described by this SOP shall be conducted in accordance with IWS 11577 "Compliance Driven Groundwater Sampling and Water Level Measurement" at the Livermore Site and LLNL IWS 11343 "Routine Groundwater Sampling and Water Level Monitoring" at Site 300.

6.5 Purge Water Collection

6.5.1 Site 300, the Field Support Personnel must ensure that wells have sufficient collection drums available at the well head for purge water containment (SOP 4.7B, "Site 300 Treatment and Disposal of Well Development and Well Purge Fluids"). The quantity of purge water to be collected for each well is listed in the quarterly sampling plan or calculated by the SC for newly installed monitor wells.

6.5.2 The Livermore Site field personnel will tow a collection tanker with the sampling vehicle when necessary. Tankers and drums filled with purge water may not be left at the well location and will be logged and disposed of daily, when possible according to SOP 4.7A, "Livermore Site Treatment and Disposal of Well Development and Well Purge Fluids."

6.6 Operation

6.6.1 Once pre-sample purging is complete according to SOP 2.1, sampling may begin. Wear new disposable gloves during sampling. Collect measurements according to SOP 2.2, "Field Measurements on Surface and Ground Waters," e.g., temperature, pH, oxidation/reduction potential (ORP), and temperature, depth to water, and any visual observations such as outgassing, etc. Instruments should be calibrated according to SOP 4.8, "Calibration and Maintenance of Field Instruments Used in Measuring Parameters of Surface and Ground Water and Soils."

6.6.2 The retrieval line should be carefully measured to ensure that the influent portion of the bailer is at the targeted sample depth and securely attached to the bailer.

6.6.3 The free end of the retrieval line should be securely fastened to the protective casing or to the sampler to avoid losing the bailer in the well.

6.6.4 Lower the bailer gently into the well until the bailer is within the screened section of the well. Avoid unnecessary agitation of the water.

6.6.5 Remove the bailer and attach the bottom-emptying device.

6.6.6 Fill the appropriate sample bottles (SOP 4.3, "Sample Containers and Preservation") using the bottom-emptying device. Allow water to flow gently down the side of the bottle with minimal entry turbulence (SOP 2.6, "Sampling for Volatile Organic Compounds") when collecting samples to be analyzed for VOCs. If a bottom-emptying device is not available, obtain the sample by gently pouring from the top of the bailer, avoiding excessive agitation.

6.6.7 Samples should be obtained in order of volatility; VOCs collected first, followed by semi VOCs, radiologicals, and inorganics, or otherwise specified by the SC. All samples should be placed in sealable-type bags. The samples requiring preservation of 4°C should be cooled down by using blue ice packs in sealable-type bags or bagged ice cubes. Loose ice may be used when samples need to be rapidly cooled, but should be replaced with blue ice before shipping.

6.6.8 If filtering and/or preservation is required, include the "FILTER" requested analysis and a notation on the CoC instructing the CAL to filter and/or preserve samples upon receipt.

6.7 Post Operation

6.7.1 Perform post operation activities described in SOP 4.1.

6.7.2 Before leaving the sampling location, verify that the appropriate samples have been collected according to the samples scheduled on the Ground Water Sampling Data Sheets.

6.7.3 Prior to sampling another site and to prevent cross contamination of equipment between locations, thoroughly decontaminate all equipment that is not dedicated according to SOP 4.5, "General Equipment Decontamination."

6.7.4 Complete the appropriate Ground Water Sampling Data Sheets and record sampling information in the designated Water Sampling Logbook (SOP 2.1 and SOP 4.2).

6.7.5 Verify that the CoC is appropriately completed per SOP 4.2. Indicate any special instructions in the Remarks Section of the CoC. Such instructions may include a request for the laboratory to filter and preserve the sample upon receipt or to analyze trip blank only when there are hits in associated samples.

6.7.6 Deliver Ground Water Sampling Data Sheets and CoC forms to the SC daily. Provide copies to the Technical Release Representative (TRR) daily if possible, and no less often than once per week.

6.7.7 The SC will retain a copy of the original forms (CoC, ground water sampling data sheets), and provide the originals to the Data Management Team (DMT) for final archive. The DMT will provide copies of the forms to the appropriate Environmental Protection Department Analyst, as necessary.

6.7.8 Leave routine samples and proper documentation in the environmental sample lock-box for the CAL. Field Personnel will ship samples and/or distribute to the appropriate laboratories. Ensure that the samples requiring refrigeration remain at 4°C ± 2°C, but do not allow them to freeze. Always ensure that proper chain of custody is maintained.

7.0 QA RECORDS

7.1 LLNL Ground Water Sampling Data Sheets

7.2 Logbooks

7.3 Chain-of-Custody forms

8.0 ATTACHMENTS

Not applicable.

LLNL Environmental Restoration Department (ERD)
Standard Operating Procedure (SOP)

ERD SOP 2.5: Surface Water Sampling—Revision: 3

AUTHOR(S):
S. Gregory and E. Walter

ENVIRONMENTAL RESTORATION DEPARTMENT
CONTROLLED COPY
_____
THIS IS A RED STAMP
ERD

APPROVALS: **Date**

Jean Yow 1/7/09
Department Manager

[signature] 11-17-08
Engineering & Operations Division Leader

CONCURRENCE: **Date**

Rebecca Goodrich 12/3/08
QA Implementation Coordinator

Type of Procedure (per ES&H Manual, Document 3.4)

☒ Informational Use ☐ General Use ☐ Continuous Use

1.0 PURPOSE

The purpose of this SOP is to establish surface water collection techniques that ensure collection of representative samples.

2.0 APPLICABILITY

This procedure is applicable to the sampling of surface water at Site 300 and the Livermore Site. Surface water may include rainwater runoff, springs, and building discharges. Building discharges may include cooling tower discharges and/or effluent from septic systems. ERD work activities are conducted within the framework of the institutional Integrated Safety Management System (ISMS). The Environmental Management System (EMS) is a component of the ISMS, which is also supported during the planning, performing, and evaluation of the work processes.

3.0 REFERENCES

3.1 deVera, E.R., B.P. Simmons, R.D. Stephen, and D.L. Storm (1980), *Samplers and Sampling Procedures for Hazardous Waste Streams*, U.S. EPA, Washington, D.C. (EPA-600/2-80-018).

3.2 Ford, P.J., P.J. Tarina, and D.E. Seely (1984), *Characterization of Hazardous Waste Sites—A Methods Manual, 302. Vol. II Available Sampling Methods,* Second Edition, U.S. EPA, Washington, D.C. (EPA-600/4-84/076).

3.3 Instrument Specialties Company (1980), *Instruction Manual, Model 2100 Wastewater Sampler*.

3.4 Korte, N. and D. Ealey (1983), *Procedures for Field Chemical Analyses of Water Samples*, U.S. Department of Energy, GJ/TMC-07, Technical Measurements Center, Grand Junction Project Office, Grand Junction, Colo.

3.5 Korte, N. and P. Kearl (1985), *Procedures for the Collection and Preservation of Groundwater and Surface Water Samples and for the Installation of Monitoring Well*s, Second Edition, U.S. Department of Energy, GJ/TMC-08, Technical Measurements Center, Grand Junction Projects Office, Grand Junction, Colo.

3.6 U.S. Department of the Interior Publication (n.d.), *National Handbook of Recommended Methods for Water-Data Acquisition*, Washington, D.C.

3.7 U.S. EPA (1982), *Handbook for Sampling and Sample Preservation of Water and Wastewater*, Washington D.C. (EPA-600/4-82-029).

3.8 U.S. EPA (1983), *Methods for Chemical Analysis of Water and Wastes*, Washington, D.C. (EPA-600/4-79-020).

3.9 U.S. EPA (1984), *Test Methods for Evaluation of Solid Waste*, Second Edition, Washington, D.C. (EPA-SW-846).

4.0 DEFINITIONS

See SOP Glossary.

5.0 RESPONSIBILITIES

5.1 Department Manager (DM)

The DM's responsibility is to ensure that all activities performed by ERD at the Livermore Site and Site 300 are performed safely and comply with all pertinent regulations and procedures, and provide the necessary equipment and resources to accomplish the tasks described in this procedure.

5.2 Project Leader (PL)

The PL's responsibility is to ensure that all activities are performed safely and comply with all pertinent regulations and procedures, work is authorized through an Integration Work Sheet (IWS), and there is sufficient funding to initiate the work.

5.3 Engineering and Operations Division Leader (EODL)

The EODL's responsibility is to ensure that proper procedures are followed for activities (e.g., construction, activation, facility operation and sampling).

5.4 Sampling Coordinator (SC)

The SC's responsibilities are to ensure that the Field Personnel have been properly trained; they comply with all applicable regulations and procedures, and generate all applicable field sheets.

5.5 Field Personnel (FP)

The FP are responsible for properly performing Surface Water Sampling in compliance with all applicable regulations and procedures to ensure the samples and data provided are representative of actual conditions.

6.0 PROCEDURES

6.1 Preparation

6.1.1 Prior to commencement of field activities, perform preparation activities described in SOP 4.1, "General Instructions for Field Personnel," including participation in the ERD Field Investigation Orientation Lesson Plan (course number EP7033-05).

6.1.2 Review all pertinent sampling information, such as the quarterly Sampling Plan and electronically generated Ground Water Sampling Data Sheets. The plan contains the following information:

- Locations to be sampled.
- Proposed sampling methods (See SOP 1, "Pre-sample Purging of Wells," Attachment A, Methodology Sampling Codes).
- Requested analyses.
- Contract analytical laboratory (CAL) to which samples are to be sent for analyses.
- Estimated amount of purge water to be collected.
- Current technical information for each well.

6.1.3 Obtain appropriate data collection forms, e.g., Chain-of-Custody (CoC) forms, Ground Water Sampling Data Sheets (SOP 2.1, Attachment B), assigned

Document Control Logbook, labels, and any necessary shipping forms. Instructions for completing the logbook entries and field forms are provided in SOP 4.2, "Sample Control and Documentation. Consult with the SC for the appropriate pre-sample purging method to apply to the site if it is not indicated on the sampling plan.

6.1.4 Compile all necessary equipment and instrumentation for sampling according to Attachment C, Equipment Checklist in SOP 2.1.

6.1.5 The appropriate number and type of sample containers needed for the sampling event should be obtained from the sample bottle inventory. The type of analysis for which a sample is being collected determines the type of bottle, preservative, holding time, and filtering requirement. See SOP 4.3, "Sample Containers and Preservation."

6.1.6 The appropriate personnel should keep a sufficient stock of sample containers and maintain an inventory of supplies, e.g., trip blanks, field blank water ordered from the contract analytical laboratory (CAL) or B151 onsite lab, plastic bags, etc., to ensure adequate sampling supplies are available at all times.

6.1.7 Organize sampling route.

The SC may specify the order in which the wells are to be sampled. Complete an entire treatment facility or study area before beginning the next, when possible.

Sample wells working from the least contaminated to the most contaminated, when it is practical to do so. When it is not practical to do so, be sure and follow proper decontamination procedures before moving on to the next sample location.

6.1.8 The Administrative Escort Services must be given a 24-hour notice before work is scheduled in restricted areas. If appropriate, arrange access to sampling areas through the Facility Point of Contact (FPOC), the Functional Area Supervisor (FAS) or the control point Operator per SOP 4.1, "General Instructions for Field Personnel."

6.1.9 Routine maintenance of ground water monitor wells and equipment such as generators and well-wizard controllers should be performed on a quarterly basis, when possible as deemed by SOP 2.12, "Ground Water Monitor Well and Equipment Maintenance." Prior to usage in the field, assigned sampling personnel should check equipment for cleanliness, proper operation, and ensure that the batteries are charged and the fittings are secure. Use gloves when handling compressors and generators, and dispose of them immediately to avoid possible sample contamination.

6.1.10 Fill out initial information on the Ground Water Sampling Data Sheet and Document Control Logbook per instructions in SOP 4.2.

6.2. Safety Considerations

6.2.1 Personnel shall meet all training requirements; review the appropriate Site Safety Plan (SSP), all applicable SOPs, and Integration Work Sheets (IWSs) prior to performing work.

6.2.2 Work activities described by this SOP shall be conducted in accordance with IWS 11577 "Compliance Driven Groundwater Sampling and Water Level Measurement" at the Livermore Site and LLNL IWS 11343 "Routine Groundwater Sampling and Water Level Monitoring" at Site 300.

6.3 Field Preparation

6.3.1 Assemble all appropriate sampling equipment (Attachment A) and load into field vehicle. Make sure that all sampling equipment is decontaminated according to SOP 4.5, "General Equipment Decontamination."

6.3.2 Locate surface waters to be sampled and determine the best sampling order. Always sample from least contaminated area to most contaminated area, if possible. Ensure that permission for offroad travel has been granted, if applicable, as described in SOP 4.1, "General Instruction for Field Personnel".

6.3.3 Fill-out any initial information in the Document Control Logbook (SOP 4.2).

6.3 Operation

6.3.1 Sampling Location

Pick a sample location as close to the source as possible. In the case of building discharges (i.e., if the water is coming from a pipe or culvert), the samples should be collected directly from the pipe to reduce volatilization. In some cases (springs and some discharge locations), samples have to be collected directly from ground depressions.

6.3.2 Low Water-Yielding Springs

A. Manually dig a small depression in the saturated soil with a clean trowel or shovel.

B. Collect samples to be analyzed for VOCs as soon as sufficient water has filled the depression. Collect samples to be analyzed for other compounds as soon as sufficient water has filled the depression to fill remaining containers.

C. Continue sample collection by following steps in Section 6.3.3 A through D.

6.3.3 High Water-Yielding Springs

If plenty of water is available, the procedures are as follows:

A. Collect samples in order of volatility, with samples to be analyzed for VOCs first. For small surface water bodies, collect samples directly into the

container that will be sent to the laboratory. There can be no head space within the container when collecting samples to be analyzed for VOCs as described in SOP 2.6, "Sampling for Volatile Organic Compounds".

B. Collect samples for other analyses directly into their appropriate container, or samples can be collected using a portable peristaltic pump. The use of a clean glass, stainless steel or Teflon vessel can also be utilized to transfer water into a specific sample container. Such vessels should be used to collect samples from near the center of the water body. A collection vessel should also be used if the sample container already contains any necessary preservative.

C. Secure caps tightly and attach an identification label to all containers. Instructions for filling out the identification label are in SOP 4.2. Fill in all Ground Water Sampling Data Sheets and Document Control Logbook and any additional information, as required.

D. Place samples into chilled cooler to maintain samples at 4°C (SOP 4.4).

6.4 Post Operation

6.4.1 Before leaving the sampling location, verify that the appropriate samples have been collected according to the samples scheduled on the Ground Water Sampling Data Sheets.

6.4.2 Prior to sampling another site and to prevent cross contamination of equipment between locations, thoroughly decontaminate all equipment that is not dedicated according to SOP 4.5, "General Equipment Decontamination."

6.4.3 Complete the appropriate Ground Water Sampling Data Sheet and record sampling information in the assigned Document Control Logbook (SOPs 2.1 and 4.2).

6.4.4 Verify that the CoC is appropriately completed per SOP 4.2. Indicate any special instructions in the Remarks Section of the CoC. Such instructions may include a request for the laboratory to filter and preserve the sample upon receipt or to analyze trip blank only when there are hits in associated samples.

6.4.5 For newly discovered locations, mark the sampling location and ID on a copy of a site map. Mark the field location with fluorescent marker tape adjacent to where the samples were collected. This reference point should be subsequently surveyed.

6.5 Post Operation

6.5.1 Perform post operation activities per SOP 4.1.

6.5.2 Inventory sampling equipment and supplies. Repair or replace all broken or damaged equipment.

6.5.3 Replace expendable items.

6.5.4 Deliver Ground Water Sampling Data Sheets and CoC forms to the SC daily. The SC will provide copies to the Technical Release Representative (TRR) daily if possible, but no less often than once per week.

6.5.5 The SC will retain a copy of the original forms (CoC, Ground Water Sampling Data Sheets), and provide the originals to the Data Management Team (DMT) for final archive. The DMT will provide copies of the forms to the appropriate Environmental Protection Department Analyst, as necessary.

6.5.6 Leave routine samples and proper documentation in the environmental sample lock-box for the CAL. Field Personnel will ship samples and/or distribute to the appropriate laboratories. Ensure that the samples requiring refrigeration remain at 4°C ± 2°C, but do not allow them to freeze. Always ensure that proper chain of custody is maintained.

7.0 QA RECORDS

7.1 Ground Water Sampling Data Sheets

7.2 Document Control Logbooks

7.3 Chain-of-Custody Forms

8.0 ATTACHMENT

Attachment A—Equipment Checklist

Attachment A

Equipment Checklist

Equipment Checklist

____ Air tight plastic bags
____ Alconox (detergent)
____ Appropriate SOPs, Site Safety Plans, Sampling Plans
____ Brushes
____ Deionized water
____ Disposable towels
____ Fluorescent marker tape
____ Glass beaker (if necessary)
____ Gloves
____ Ice chest with bagged ice or Blue Ice
____ Logbook
____ Maps
____ Packing material
____ Paper towels
____ Permanent ink markers
____ Portable electric pump and disposable tubing
____ Sample containers and appropriate preservative when necessary
____ Shovel
____ Snake Chaps
____ Trash bags
____ Trowel

LLNL Environmental Restoration Department (ERD)
Standard Operating Procedure (SOP)

ERD SOP 2.6: Sampling for Volatile Organic Compounds—Revision: 6

AUTHOR(S):
R. Goodrich and G. Howard

APPROVALS:	Date
Jesse Yow Department Manager	1/7/09
E. J. Folsom Engineering & Operations Division Leader	11-17-08

CONCURRENCE:	Date
Rebecca Goodrich QA Implementation Coordinator	12/3/08

Type of Procedure (per ES&H Manual, Document 3.4)

☒ Informational Use ☐ General Use ☐ Continuous Use

1.0 PURPOSE

The purpose of this SOP is to provide guidance on the collection of a ground water sample to be analyzed for volatile organic compounds (VOCs). The objective is to provide the laboratory with a sample that is representative of its original environment.

2.0 APPLICABILITY

This procedure applies to the collection of ground water samples to be analyzed for VOCs. Due to the volatility of such compounds as Trichloroethylene, extra care should be taken during sample collection to ensure sample integrity. ERD work activities are conducted within the framework of the institutional Integrated Safety Management System (ISMS). The

Environmental Management System (EMS) is a component of the ISMS, which is also supported during the planning, performing, and evaluation of the work processes.

3.0 REFERENCES

3.1 Morse, S.I. (1997), San Francisco Bay Regional Water Quality Control Board, Toxics Cleanup Division; letter to Interested Parties. Subject: *Utilization of Non-Purge Approach for Sampling of Monitoring Wells Impacted by Petroleum Hydrocarbons, BTEX, and MTBE,* File: 1123.64, January 31, 1997.

3.2 Robbins, G.A. and J.M. Martin-Hayden (1991), Mass Balance Evaluation of Monitoring Well Purging: Part 1. Theoretical Models and Implications for Representative Sampling," *J. Contam. Hydrol.* 8, 203–224.

3.3 Schilling K.E. (1995), Low-Flow Purging Reduces Management of Contaminated Groundwater, *Environmental Protection*, December 1995.

3.4 U.S. EPA (1985), *Practical Guide for Groundwater Sampling*, Washington, D.C. (EPA/600/2-85/104).

3.5 U.S. EPA (1986), *RCRA Groundwater Monitoring Technical Enforcement Guidance Document*, Washington, D.C. (OSWER-9959.1).

3.6 U.S. Environmental Protection Agency (EPA) (1996), Low-Flow (Minimal Drawdown) Ground-Water Sampling Procedures, *Ground Water Issue*, EPA/540/S-95/504.

3.7 U.S. Environmental Protection Agency (EPA) (1995), *Use of Low-Flow Methods for Ground Water Purging and Sampling: An Overview*, Quick Reference Advisory (December 1995).

4.0 DEFINITIONS

See SOP Glossary.

5.0 RESPONSIBILITIES

5.1 Department Manager (DM)

The DM's responsibility is to ensure that all activities performed by ERD at the Livermore Site and Site 300 are performed safely and comply with all pertinent regulations and procedures, and provide the necessary equipment and resources to accomplish the tasks described in this procedure.

5.2 Project Leader (PL)

The PL's responsibility is to ensure that all activities are performed safely and comply with all pertinent regulations and procedures, work is authorized through an Integration Work Sheet (IWS), and there is sufficient funding to initiate the work.

5.3 Engineering and Operations Division Leader (EODL)

The EODL's responsibility is to ensure that proper procedures are followed for activities (e.g., construction, activation, facility operation and sampling).

5.4 Sampling Coordinator (SC)

The SC's responsibility is to supply a quarterly Sampling Plan to the Field Personnel and track sample collection throughout the quarter to ensure completion of the sampling plan within the specified sampling quarter.

5.2 Field Personnel (FP)

The FP are responsible for the safe completion of evacuating and sampling ground water monitor wells according to guidelines set forth by this procedure and associated SOPs.

5.3 Field Support Personnel (FSP)

The FSP are responsible for providing the appropriate equipment, collection devices, and general field support to assure that field activities are performed in a timely and efficient manner. FSP are also responsible for adhering to all applicable ERD SOPs.

6.0 PROCEDURES

Because laboratory methods are extremely sensitive, well controlled, and quality assured, sample collection should also be performed following comparable procedures. The proper collection of a sample to be analyzed for dissolved VOCs requires minimal disturbance to the sample in order to limit volatilization, and produce a representative sample.

6.1 Preparation

6.1.1 Prior to commencement of field activities, perform preparation activities described in SOP 4.1, "General Instructions for Field Personnel," including participation in the ERD Field Investigation Orientation Lesson Plan (course number EP7033-05).

6.1.2 Review all pertinent sampling information, such as the quarterly Sampling Plan and electronically generated Ground Water Sampling Data Sheets. The plan contains the following information:

- Locations to be sampled.
- Proposed sampling methods (See SOP 2.1 Attachment A, Methodology Sampling Codes).
- Requested analyses.
- Contract analytical laboratory (CAL) to which samples are to be sent for analyses.

- Estimated amount of purge water to be collected.
- Current technical information for each well.

6.1.3 Obtain appropriate data collection forms, e.g., Chain-of-Custody (CoC) forms, Ground Water Sampling Data Sheets (SOP 2.1, Attachment B), assigned Document Control Logbook, labels, and any necessary shipping forms. Instructions for completing the logbook entries and field forms are provided in SOP 4.2, "Sample Control and Documentation. Consult with the SC for the appropriate pre-sample purging method to apply to the site if it is not indicated on the sampling plan.

6.1.4 Contaminant information is provided in the quarterly Sampling Plan or by the SC and should be reviewed prior to sampling. The SC also provides contaminant information for newly completed installations that may not appear on the plan.

6.1.5 Obtain appropriate materials to conduct field work according to Attachment C, Equipment Checklist in SOP 2.1.

6.1.6 The number and type of sample containers needed for the sampling event should be obtained from the sample bottle inventory. The appropriate personnel should keep a sufficient stock of sample containers on hand. Field personnel should also maintain an inventory of supplies, e.g., trip blanks, field blank water ordered from the CAL or B151 onsite lab, plastic bags, etc., to ensure adequate sampling supplies are available at all times.

6.1.7 Organize sampling route.

The SC may specify the order in which the wells are to be sampled. Complete an entire treatment facility or study area before beginning the next, when possible.

Sample wells working from the least contaminated to the most contaminated, when it is practical to do so. When it is not practical to do so, be sure and follow proper decontamination procedures before moving on to the next sample location.

6.1.8 The Administrative Escort Services must be given a 24-hour notice (at a minimum) before work is scheduled in restricted areas. If appropriate, arrange access to sampling areas through the Facility Point of Contact (FPOC), the Functional Area Supervisor (FAS) or the control point Operator per SOP 4.1, "General Instructions for Field Personnel."

6.1.9 The analytical lab should be notified when collecting samples with short holding times (e.g., hexavalent chromium, fecal and total coliform) or samples needing analyzed on a rush turn-around-time, e.g., 24h, 10d, etc. to ensure the analysis can be performed within the specified time frame.

6.1.10 Record the required information on the Ground Water Sampling Data Sheet and Document Control Logbook per the instructions in SOP 4.2, "Sample Control and Documentation."

6.2. Safety Considerations

6.2.1 Personnel shall meet all training requirements; review the appropriate Site Safety Plan (SSP), all applicable SOPs, and Integration Work Sheets (IWSs) prior to performing work.

6.2.2 Work activities described by this SOP shall be conducted in accordance with IWS 11577 "Compliance Driven Groundwater Sampling and Water Level Measurement" at the Livermore Site and LLNL IWS 11343 "Routine Groundwater Sampling and Water Level Monitoring" at Site 300.

6.3. Purge Water Collection

6.3.1 At Site 300, the field support personnel must ensure that wells have sufficient collection drums available at the wellhead for purge water containment (SOP 4.7B, "Site 300 Treatment and Disposal of Well Development and Well Purge Fluids"). The quantity of purge water to be collected for each well is listed in the quarterly Sampling Plan or calculated by the SC for newly installed monitor wells.

6.3.2 The Livermore Site field personnel will tow a collection tanker with the sampling vehicle when necessary. Tankers and drums filled with purge water may not be left at the well location and will be logged and disposed of daily, when possible according to SOP 4.7A, "Livermore Site Treatment and Disposal of Well Development and Well Purge Fluids."

6.4 Operation

6.4.1 Purge well prior to sampling as specified in SOP 2.1. Obtain water quality parameters in accordance with SOP 2.2, "Field Measurements on Surface and Ground Waters."

6.4.2 Sample retrieval systems suitable for the valid collection of volatile organic samples include positive displacement bladder pumps, gear-driven submersible pumps, specific-depth grab sampling devices and bailers. Field conditions and other constraints will limit the choice of appropriate systems. A sample subjected to the least amount of turbulence possible remains as the objective in collecting a representative sample for analysis.

A. Sample Retrieval-Bladder Pump

These pumps are used in wells producing a sustainable yield of <1.0 gallons per minute (gpm), where the casing depth does not exceed 150 ft, and where there is not a significant quantity of water to remove. These pumps require a power supply and a compressed gas supply or compressor. They may be operated at variable flows (under 0.5 gpm), making them acceptable for purging and sampling wells in low-yielding aquifers.

1. Label vials with appropriate sample information. Open vials and set caps in an upright position in a clean place. Collect the sample during the middle of the cycle. Collect one volatile organic analysis (VOA) vial at a time to avoid spillage and possible breakage. Reduce the discharge pressure on the controller to minimize volatilization of the sample. Sample should be collected over a collection vessel such as a tray, bucket or collection drum to avoid spillage to ground when contaminants are present in the ground water. Contamination information is included in the Sampling Plan and on the electronically generated Ground Water Sampling Data Sheets.
2. Hold the edge of the sample discharge line at the top edge of the sample vial and allow the water to run down the inside into the vial. Do not allow the discharge tube to touch the sample vial or the water to drop or fall into the vial; avoid splashing. The proper collection of a sample for dissolved VOCs requires minimal disturbance of the sample to limit volatilization and, therefore, a loss of VOCs from the sample.
3. Do not rinse the vials or excessively overflow them. There should be a convex meniscus on the top of the vials. Visually check that the caps have not been contaminated and then carefully cap the vials.
4. Invert the vials and tap gently. No entrapped air should be left in the sample vial. In some instances, a well can have natural off-gassing which can produce gas bubbles in the sample. In these cases of natural off-gassing, the sample should sit open to allow the gas to coalesce, then top off the sample until a convex meniscus forms and gas bubbles disappear.
5. Place the samples in airtight plastic bags in a cooler containing bagged ice, loose cubes, or bagged blue ice. Loose ice should be replaced with bagged ice or bagged blue ice before shipping. Samples should be maintained at 4°C ± 2°C. When submitting samples to be analyzed for VOCs, a trip blank should be included in the cooler for analysis. A note regarding the trip blank analysis should be provided to the CAL in the remarks section of the CoC (e.g., analyze trip blank only if there are VOCs detected in associated samples).

B. Sample Retrieval—Submersible Pump

Electric submersible pumps are used to quickly and efficiently purge large quantities of water. The flow rate is controlled at the surface by an in-line ball valve attached to a sample tee or controlled by the use of a rheostat. Samples are collected from a small diameter ®Teflon tube. Care must be exercised when sampling for VOCs to avoid possible splashing and aeration.

1. Place the generator downwind from the well.
2. Attach the dedicated sample tee (found inside the protective steel casing) to the discharge pipe. Start the generator. Adjust the discharge rate by partially closing the ball valve on the sample tee so that the well will yield

water without exposing the screen when possible. When using a rheostat equipped pump, the discharge rate is controlled by the pump speed on the controller unit.

3. Water levels should be monitored at the frequency determined by the sampling method described in SOP 2.1, "Pre-sample Purging of Wells" to ensure the water level does not drop below the pump intake or screened interval when possible.
4. Follow steps in Section 6.4.2A steps 1 through 5.

C. Sample Retrieval—Bailers

Where approved by the SC, it is acceptable to use a ®Teflon, stainless steel, polyethylene, or polyvinyl chloride (PVC) bailer. SOP 2.1, "Pre-sample Purging of Wells," Attachment E is a schematic of a typical bailer. Collection of an equipment blank sample may be necessary when using a non-dedicated bailer, consult SOP 4.9, "Collection of Field QC Samples" for this determination.

1. The retrieval rope should be securely attached to the bailer. A new rope should be used at each well, unless the bailer is dedicated. Dedicated bailers should be checked for cracks and breaks and replaced when necessary.
2. The free end of the retrieval rope should be fastened to the protective casing or secured by the sampler to avoid losing the bailer in the well.
3. Lower the bailer gently into the well and begin water removal. Avoid unnecessary agitation of the water. Collect or dispose of purged water in acceptable containers as specified in SOP 4.7A or SOP 4.7B.
4. To collect a sample from the bailer, an emptying device is inserted into the bottom of the bailer which expels the water. Again, use caution when filling sample VOA vial (SOP 2.4, "Sampling Monitoring Wells with a Bailer").
5. Follow steps in Section 6.4.2A steps 1 through 5.

D. Sample Retrieval—Specific-Depth Grab Sample Device

These devices obtain samples at a specific depth within the water column. The procedure is to lower the device to the depth specified (usually the mid-point of the screened interval) by the SC and or appropriate personnel. The device is then activated and two or more sample chamber volumes are drawn through the bailer. The sample is isolated from the water column by shutting off the pump. This closes the double-check valves and allows the sample to be retrieved. The device is retrieved and the sample is transferred to sample vessels as outlined in Section 6.4.2A steps 1 through 5.

6.5 Post Operation

6.5.1 Perform post operation activities per SOP 4.1.

6.5.2 Before leaving the sampling location, verify that the appropriate samples have been collected according to the samples scheduled on the Ground Water Sampling Data Sheets.

6.5.3 Prior to sampling another site and to prevent cross contamination of equipment between locations, thoroughly decontaminate all equipment that is not dedicated according to SOP 4.5, "General Equipment Decontamination."

6.5.4 Complete the appropriate Ground Water Sampling Data Sheet and record sampling information in the assigned Document Control Logbook (SOPs 2.1 and 4.2).

6.5.5 Verify that the CoC is appropriately completed per SOP 4.2. Indicate any special instructions in the Remarks Section of the CoC. Such instructions may include a request for the laboratory to filter and preserve the sample upon receipt or to analyze trip blanks only if hits are detected in associated samples.

6.5.6 Deliver Ground Water Sampling Data Sheets and CoC forms to the SC daily. Provide copies to the Technical Release Representative (TRR) daily if possible, and no less than once per week.

6.5.7 The SC will retain a copy of the original forms (CoC, Ground Water Sampling Data Sheets), and provide the originals to the Data Management Team (DMT) for final archive. The DMT will provide copies of the forms to the appropriate Environmental Protection Department Analyst, as necessary.

6.5.8 Leave routine samples and proper documentation in the environmental sample lock-box for the CAL. Field personnel will ship samples and/or distribute to the appropriate laboratories. Ensure that the samples requiring refrigeration remain at 4°C ± 2°C, but do not allow them to freeze. Always ensure that proper chain of custody is maintained.

7.0 QA RECORDS

7.1 Ground Water Sampling Data Sheets

7.2 Document Control Logbooks

7.3 Chain-of-Custody Forms

8.0 ATTACHMENTS

Not applicable.

LLNL Environmental Restoration Department (ERD)
Standard Operating Procedure (SOP)

ERD SOP 2.7: Pre-sample Purging and Sampling of Low-Yielding Monitor Wells—Revision: 6

AUTHOR(S):
R. Goodrich and G. Howard

ENVIRONMENTAL RESTORATION DEPARTMENT
CONTROLLED COPY
_____
THIS IS A RED STAMP
ERD

APPROVALS: **Date**

Jesse Yow 1/7/09
Department Manager

Ed Ogden 11-9-08
Engineering & Operations Division Leader

CONCURRENCE: **Date**

Rebecca Goodrich 12/3/08
QA Implementation Coordinator

Type of Procedure (per ES&H Manual, Document 3.4)

☒ **Informational Use** ☐ **General Use** ☐ **Continuous Use**

1.0 PURPOSE

The purpose of this SOP is to provide well purging (evacuation) and sampling techniques that will obtain representative samples from wells that yield less than three well-casing volumes of water.

2.0 APPLICABILITY

This procedure applies to sampling ground water monitor wells that are completed in low-yielding aquifers, which produce less than three well casing volumes prior to sampling. ERD work activities are conducted within the framework of the institutional Integrated Safety Management System (ISMS). The Environmental Management System (EMS) is a component

of the ISMS, which is also supported during the planning, performing, and evaluation of the work processes.

3.0 REFERENCES

3.1 Barcelona, M.J., J.P. Gibb, J.A. Helfrich, and E.E. Garske (1985), *Practical Guide for Ground Water Sampling*, U.S. EPA, Washington, D.C. (EPA-600/2-85/104).

3.2 U.S. EPA (1986), *RCRA Ground Water Monitoring Technical Enforcement Guidance Document*, Washington, D.C. (OSWER-9950.1).

3.3 Kearl, P.M., N.E. Korte, M. Stites, and J. Baker (Fall 1994), GWMR, *Field Comparisons of Micropurging vs. Traditional Ground Water Sampling*.

3.4 Howard, G.W. and G. Kumamoto (1994), *Cost Effectiveness and Waste Minimization through Low Volume, Pre-Sample Purging Using Historic Sustainable Yield, While Utilizing Existing Sampling Equipment*, TIE Conference.

3.5 U.S. EPA (1992), *RCRA Ground-Water Monitoring: Draft Technical Guidance*, Washington, D.C. (EPA/530-R-93-001).

4.0 DEFINITIONS

See SOP Glossary.

5.0 RESPONSIBILITIES

5.1 Department Manager (DM)

The DM's responsibility is to ensure that all activities performed by ERD at the Livermore Site and Site 300 are performed safely and comply with all pertinent regulations and procedures, and provide the necessary equipment and resources to accomplish the tasks described in this procedure.

5.2 Project Leader (PL)

The PL's responsibility is to ensure that all activities are performed safely and comply with all pertinent regulations and procedures, work is authorized through an Integration Work Sheet (IWS), and there is sufficient funding to initiate the work.

5.3 Engineering and Operations Division Leader (EODL)

The EODL's responsibility is to ensure that proper procedures are followed for activities (e.g., construction, activation, facility operation and sampling).

5.4 Sampling Coordinator (SC)

The SC's responsibility is to supply a quarterly Sampling Plan to the Field Personnel and track sample collection throughout the quarter to ensure completion of the sampling plan within the specified sampling quarter.

5.5 Field Personnel (FP)

The FP are responsible for ensuring safe completion of evacuating and sampling ground water monitor wells according to guidelines set forth by this procedure, as well as other associated SOPs. The wells to be purged frequently are listed in the quarterly sampling plan provided by the Sampling Coordinator (SC).

5.6 Field Support Personnel (FSP)

The FSP are responsible for providing the appropriate equipment, collection devices for purge water, and general field support, which enables personnel to perform field activities efficiently and on time.

6.0 PROCEDURES

This SOP describes procedures to minimize problems inherent in sampling low-yielding wells, and it provides consistency in sampling such wells. Low-yielding wells are typically sampled using grab sampling, 90% of 1 casing volume, or dry-out method. Pre-sample purging and sampling should be performed without lowering the water level in the well below the screened interval, to prevent water from cascading down the screen, possibly volatilizing constituents of interest. However, the sustainable flow rate of some wells at Site 300 and the Livermore Site is low (<0.5 gpm), making it impossible to avoid drawing the water level into the screened interval and/or drying out the well.

6.1 Preparation

6.1.1 Prior to commencement of field activities, perform preparation activities described in SOP 4.1, "General Instructions for Field Personnel," including participation in the ERD Field Investigation Orientation Lesson Plan (course number EP7033-05).

6.1.2 Review all pertinent sampling information, such as the quarterly Sampling Plan and electronically generated Ground Water Sampling Data Sheets. The plan contains the following information:

- Locations to be sampled.
- Proposed sampling methods (See SOP 2.1, Attachment A, Methodology Sampling Codes).
- Requested analyses.
- Contract analytical laboratory (CAL) to which samples are to be sent for analyses.
- Estimated amount of purge water to be collected.
- Current technical information for each well.

6.1.3 Obtain appropriate data collection forms i.e., Chain-of-Custody (CoC) forms, Ground Water Sampling Data Sheets (SOP 2.1, Attachment B), assigned Document Control Logbook, labels, and any necessary shipping forms.

Instructions for completing the logbook entries and field forms are provided in SOP 4.2, "Sample Control and Documentation. Consult with the SC for the appropriate pre-sample purging method to apply to the site if it is not indicated on the sampling plan.

6.1.4 Contaminant information is provided in the quarterly Sampling Plan or by the SC and should be reviewed prior to sampling. The SC also provides contaminant information for newly completed installations that may not appear on the plan.

6.1.5 Obtain appropriate materials to conduct field work according to SOP 2.1, Attachment C, Equipment Checklist.

6.1.6 The number and type of sample containers needed for the sampling event should be obtained from the sample bottle inventory. The appropriate personnel should keep a sufficient stock of sample containers on hand. Field Personnel should also maintain an inventory of supplies, e.g., trip blanks, field blank water ordered from the CAL or B151 onsite lab, plastic bags, etc., to ensure adequate sampling supplies are available at all times.

6.1.7 Organize sampling route:

The SC may specify the order in which the wells are to be sampled. Complete an entire treatment facility or study area before beginning the next, when possible.

Sample wells working from the least contaminated to the most contaminated, when it is practical to do so. When it is not practical to do so, be sure and follow proper decontamination procedures before moving on to the next sample location.

6.1.8 The Administrative Escort Services must be given a 24-hour notice (at a minimum) before work is scheduled in restricted areas.

6.1.9 Record the required information on the Ground Water Sampling Data Sheets and Document Control Logbook per the instructions in SOP 4.2, "Sample Control and Documentation."

6.2. Safety Considerations

6.2.1 Personnel shall meet all training requirements; review the appropriate Site Safety Plan (SSP), all applicable SOPs, and Integration Work Sheets (IWSs) prior to performing work.

6.2.2 Work activities described by this SOP shall be conducted in accordance with IWS 11577 "Compliance Driven Groundwater Sampling and Water Level Measurement" at the Livermore Site and LLNL IWS 11343 "Routine Groundwater Sampling and Water Level Monitoring" at Site 300.

6.3 Purge Water Collection

6.3.1 At Site 300, the field support personnel must ensure that wells have sufficient collection drums available at the wellhead for purge water containment

(SOP 4.7B, "Site 300 Treatment and Disposal of Well Development and Well Purge Fluids"). The quantity of purge water to be collected for each well is listed in the quarterly Sampling Plan or calculated by the SC for newly installed monitor wells.

6.3.2 The Livermore Site field personnel will tow a collection tanker with the sampling vehicle when necessary. Tankers and drums filled with purge water may not be left at the well location and will be logged and disposed of daily, when possible according to SOP 4.7A, "Livermore Site Treatment and Disposal of Well Development and Well Purge Fluids."

6.4 Operation

6.4.1 Purging Techniques:

1. Begin purging the well using the appropriate technique as described in SOP 2.1.
2. Initial field measurements should be taken from the first available water as soon as purging begins. Obtain water quality parameters in accordance with SOP 2.2, "Field Measurements on Surface and Ground Waters." Once the initial field parameters have been measured a discharge rate should be calculated. According to the manufacturer's recommendation, the well should be purged at a discharge rate of no less than 1.2 gpm when using an electric submersible pump. Regardless of the type of purging device used, the intent is to cause the least disturbance possible to the aquifer during the purging process.
3. Additional field parameter measurements should be collected at the frequency determined by the sampling method as described in SOP 2.1.
4. Purging a well to dryness is acceptable when specified by the SC. Follow procedures below beginning with Section 6.4.2.
5. One method of sampling wells that fit the "low-yielding monitor well" criteria is to purge a minimal amount of water prior to sampling using low-volume purge techniques. The Ground Water Sampling Data Sheet will specify the method chosen by the appropriate personnel.
6. Exposing the screened interval and/or the pump intake is to be avoided. The pump intake placement should be mid-screened interval for Livermore Site installations and near the bottom of the screened interval for Site 300 installations, unless otherwise requested by the SC and or appropriate personnel (e.g., Hydrogeologist).
7. The pumps discharge rate should be reduced to permit the recording of parameter measurements prior to sampling.
8. Alert the SC if the pumps discharge rate is not easily reduced to allow sampling prior to the well drying out.

6.4.2 If a well is purged to dryness, determine the amount of water purged from the well after discharge from the pump has ceased. This volume of water is recorded on the Ground Water Sampling Data Sheets, SOP 2.1, Attachment C.

6.4.3 Once the well has been purged dry, well recovery should be monitored by measuring the water level and calculating the volume of water remaining in the well casing. In order to sample the well, a sufficient amount of water must be available to purge the pump and discharge lines. This amount will vary depending upon pump type, well depth, and number and types of samples required. When a well goes dry prior to sample collection, field parameters should be measured before collecting the sample.

6.4.4 Sampling procedures in SOPs 2.2 through 2.6 should be followed as closely as possible. Ideally, all samples for the analysis of volatile compounds should be obtained within 2 hours of purging the well dry. It is acceptable to obtain these samples within 2 hours, allowing additional well recovery for any remaining samples for nonvolatile analysis. If sampling is split between recovery periods, field measurements should be obtained after each recovery period.

6.4.5 If insufficient water is available to obtain the samples for volatile analysis, the well should be monitored approximately every 2 hours until sufficient water is available for sampling. If sufficient water is still not available for sampling at the end of the work day, samples should be obtained immediately the next morning, providing water is available. If there is still insufficient water available for sampling, the 2-hour monitoring schedule should be resumed until enough water is available for sampling.

6.4.6 All purging rates, number of times purged, field measurements, and well recovery monitoring should be recorded on the Ground Water Sampling Data Sheets.

6.5 Post Operation

6.5.1 Perform post operation activities per SOP 4.1.

6.5.2 Complete and deliver documentation as described in all water sampling procedures SOPs 2.1 through 2.6.

7.0 QA RECORDS

7.1 Ground Water Sampling Data Sheets

72. Document Control Logbooks

7.3 Chain-of-Custody Forms

8.0 ATTACHMENTS

Not applicable.

LLNL Environmental Restoration Division (ERD)
Standard Operating Procedure (SOP)

ERD SOP 2.8: Installation of Dedicated Sampling Devices—Revision: 5

AUTHOR(S):
R. Goodrich and G. Howard

ENVIRONMENTAL RESTORATION DIVISION
CONTROLLED COPY
_____
THIS IS A RED STAMP
ERD

APPROVALS: **Date**

Albert I Lamarre 9/5/03
Division Leader

9/3/03
Environmental Chemistry and Biology Group Leader

CONCURRENCE: **Date**

Rebecca Goodrich 8/25/03
QA Implementation Coordinator (Acting)

1.0 PURPOSE

The purpose of this SOP is to describe selection criteria and installation techniques for dedicated sampling pumps in ground water monitor wells to ensure installation is completed in a sound, consistent, and reliable manner.

2.0 APPLICABILITY

This SOP is applicable for use in the selection and installation of well purging and/or sampling devices. All personnel performing such tasks should review this procedure prior to commencement of related activities.

3.0 REFERENCES

3.1 Barcelona, M. J., J. A. Helfrich, E. E. Garske, and J. P. Gibb (1984), "A Laboratory Evaluation of Ground Water Sampling Mechanisms," *Ground Water Monitoring Review*, Spring, pp. 32-41.

3.2 Morse, S. I. (1997), San Francisco Bay Regional Water Quality Control Board, Toxics Cleanup Division; letter to Interested Parties. Subject: *Utilization of Non-Purge Approach*

for Sampling of Monitoring Wells Impacted by Petroleum Hydrocarbons, BTEX, and MTBE, File: 1123.64, January 31, 1997.

3.3 Nielsen, D. M. and G. L. Yeates (1985), "A Comparison of Sampling Mechanisms Available for Small Diameter Ground Water Monitoring Wells," *Ground Water Monitoring Review*, Spring, pp. 83-99.

3.4 Robbins, G. A., and J. M. Martin-Hayden (1991), Mass Balance Evaluation of Monitoring Well Purging: Part 1. Theoretical Models and Implications for Representative Sampling," *J. Contam. Hydrol.* 8, 203–224.

3.5 Schilling K. E. (1995), Low-Flow Purging Reduces Management of Contaminated Groundwater, *Environmental Protection*, December 1995.

3.6 U.S. EPA (1992), *RCRA Ground-Water Monitoring: Draft Technical Guidance*, Washington, D.C. (EPA/530-R-93-001).

3.7 U.S. Environmental Protection Agency (EPA) (1995), Low-Flow (Minimal Drawdown) Ground-Water Sampling Procedures, *Ground Water Issue*, EPA/540/S-95/504.

3.8 U.S. Environmental Protection Agency (EPA) (1995), *Use of Low-Flow Methods for Ground Water Purging and Sampling: An Overview*, Quick Reference Advisory (December 1995).

4.0 DEFINITIONS

See SOP Glossary.

5.0 RESPONSIBILITIES

5.1 Division Leader

The Division Leader's responsibility is to ensure that all activities performed by ERD at the Livermore Site and Site 300 are performed safely and comply with all pertinent regulations and procedures, and provide the necessary equipment and resources to accomplish the tasks described in this procedure.

5.2 Field Coordinator (FC)

The FC in consultation with the Drilling Geologist (DG), Subproject Leader (SL), and the Sampling Coordinator (SC) selects the appropriate monitor well pump. The FC is solely responsible for ordering and ensuring proper installation of the pump once it has been selected.

5.3 Subproject Leader (SL)

The SL is responsible for the overall investigation, planning, and assessment and remediation within a study or treatment facility area.

5.4 Field Support Personnel

The field support personnel are responsible for providing necessary equipment, collection devices, and general field support, which enables sampling personnel to perform field activities in a timely and efficient manner.

6.0 PROCEDURE

6.1 Choosing the Placement of the Appropriate Sampling Device

6.1.1 In order to ensure timely sampling of LLNL wells and prevent cross-contamination caused by moving pumps from well to well, wells are usually fitted with dedicated sampling pumps, unless otherwise specified by the SL.

6.1.2 The choice of pump type largely depends on the sampling methodology that best matches the Data Quality Objective (DQO), the type of constituents being sampled for, and specifications such as well depth and yield. Completed wells are initially sampled (baseline sampling) by high volume purge techniques when possible. Hydrogeologic data is used in conjunction with DQOS to decide the sampling device type and depth of sampling device intake. Pumps are generally installed at the bottom of the screened interval in monitor wells at Site 300 due to the large number of low-yielding wells. Pumps at the Livermore Site are installed at mid-screened interval, at the discretion of the SL and/or FC. As appropriate, the SL, SC, or FC determines the type and placement of all dedicated pumps.

6.2 Preparation

6.2.1 Perform preparation activities per SOP 4.1, "General Instructions for Field Personnel."

6.2.2 Identify wells requiring installation of dedicated sampling device.

6.2.3 Review any available chemical analyses. The Site Safety Officer should be consulted as to the appropriate safety precautions and/or protective gear required.

6.2.4 The SC in consultation with the SL, should review the available chemical analyses, drilling logs, well development, and hydraulic testing records to determine the appropriate pump type and placement for each monitor well.

6.2.5 Order any necessary equipment (i.e., pumps, discharge tubing, control boxes, sounding tubes, sanitary seals, etc.).

6.2.6 Procure the appropriate pieces of equipment according to Attachment A, Equipment Checklist.

6.2.7 Ensure that the pump installation truck containing a winch and an operational power supply is available.

6.2.8 Ensure that all equipment and materials to be installed in the well have been adequately decontaminated as described in SOP 4.5, "General Equipment Decontamination."

6.2.9 Locate monitor wells that require dedicated pumps.

6.3 Operation

6.3.1 Bladder Pumps

A. Measure the appropriate lengths of discharge line, gas line, sounding tube (when necessary), so the pump intake will be at the specified depth. Ensure that the safety cable is slightly shorter than the gas line and discharge line so it will support the pump when installed.

B. Fasten the tubing to the pump and the top cap using threaded compression fittings, as specified by the pump manufacturer.

C. Feed the tubing through the appropriate port in the sanitary seal (when necessary).

D. Lower the complete assembly down the well by hand.

E. Install wellhead seal of appropriate size for below-grade wellheads.

F. Secure the cap assembly on top of the well casing. Place a cap on the sounding port (when necessary). Attachment B is a diagram of a well with a dedicated bladder pump.

6.3.2 Electric Submersible Pumps

A. Center the pump hoist over the well.

B. Splice the pump wiring harness to the electrical cable using watertight solderless connectors.

C. Secure safety cable to pump.

D. Thread a hoisting plug into the discharge line and hoist it to a vertical position.

E. Connect torque-arrestor at the bottom of the discharge pipe, and adjust so that it fits snugly into the well casing.

F. Thread the first 20-ft section of discharge line into the pump.

G. Using a plastic clamp (i.e., tie-wrap), bundle the discharge line, electrical cable, safety cable, and sounding tube at 5- to 10-ft intervals.

H. Carefully lower the assembly into the well using the pump hoist.

I. After lowering the assembly to the first pipe coupling, place a holding device under the coupling and lower onto device. Add additional lengths of discharge pipe and sounding tube while repeating steps F-H until the pump intake reaches the next coupling, and repeat to the last section of pipe.

J. Place the sanitary seal on the final piece of discharge pipe (precut to the appropriate length), thread the final pipe onto the discharge line, and connect the safety cable to the seal.

K. Field support personnel will splice about 4 ft of 12-gauge, four-strand, sheathed electrical cord to the end of the 10-gauge electrical cable using solderless connectors. Feed the cord through the appropriate port and fitting on the sanitary seal.

L. Connect the power cord in the following way:

1. Finish the cord with a 115- or 230-volt AC plug (male end) as specified by the pump manufacturer. Attachment C is a diagram of a below-grade wellhead completion.

M. Place threaded plugs in the discharge line and sounding tube. Attachment D is a diagram of a well with a dedicated electric submersible pump.

6.3.3 Specific-Depth Grab Sampling Devices (e.g., EasyPump)

A. A device, such as the EasyPump (see SOP 2.1, Attachment F) will have a power supply/safety cable cut to the correct length for the well and wound on a spool with power-supply plug fittings. A 12-volt submersible pump is attached to the power cord by means of these fittings. Due to the compact size of this sampling device, the spool, power cord, and pump may be left secured in the stovepipe, or removed and stored remotely for future use. The power supply/controller is hand carried to the site.

1. To install, attach disposable sample capture portion to the base of 12v pump. Hand lower to desired depth. The sample capture portion is disposable, and upon completion of the sampling event, may be discarded.

6.4 Post Operation

6.4.1 Perform post operation activities described in SOP 4.1, as applicable.

6.4.2 Use the Well Specification Form to record the date of installation, the pump type, and actual pump intake depth as recorded in the Well Entry Logbook and Pump Installation Logbook. The point-of-measurement (POM) for the pump intake depth should always be measured from the top of the concrete pad and recorded as such. Test the pump to make sure it is operational.

6.4.3 Secure the protective casing with its lock.

6.4.4 Transfer a copy of all recorded information to the SC and the Data Management Team (DMT).

7.0 QA RECORDS

7.1 Well Entry Logbooks

7.2 Pump Installation Logbook

7.3 Well Specifications Form

8.0 ATTACHMENTS

Attachment A—Equipment Checklist

Attachment B—Well Completion and Pump Placement for Bladder Pumps

Attachment C—Below Grade Wellhead Completions

Attachment D—Wellhead Completion and Pump Placement for Electrical Submersible Pumps

Attachment A

Equipment Checklist

Equipment Checklist

_____ Appropriate wellhead sanitary seals matched to well diameter

_____ Bladder pumps, electric submersible pumps, specific-depth grab sampling devices and bailer

_____ Deep well wire water tight connectors (electrical sub.)

_____ Electrical cable (10- and 12-gauge, 4-wire), power plugs for electric submersible pumps, cable connectors (water tight)

_____ Fittings and valves for sampling tee's

_____ Schedule 80 polyvinyl chloride (PVC) pipe (1 to 2 in. depending on pump size) for discharge tubes on electric submersible pumps, sch. 80 pipe couplers (threaded)

_____ Schedule 120-40 PVC pipe (1 in.) to be used as sounding tubes for water level measurements

_____ Slip to slip well casing couplers

_____ Slip to thread couplers for sounding tubes

_____ Stainless steel safety cable (1/8 in.) to span the distance from pump to top of the well casing

_____ Discharge tubes for bladder pumps and Quick-connect fittings for tubing

_____ Threaded plugs for discharge and sounding pipes (electrical sub.)

_____ Tool kit

_____ Torque arrestor

Attachment B

Well Completion and Pump Placement for Bladder Pumps

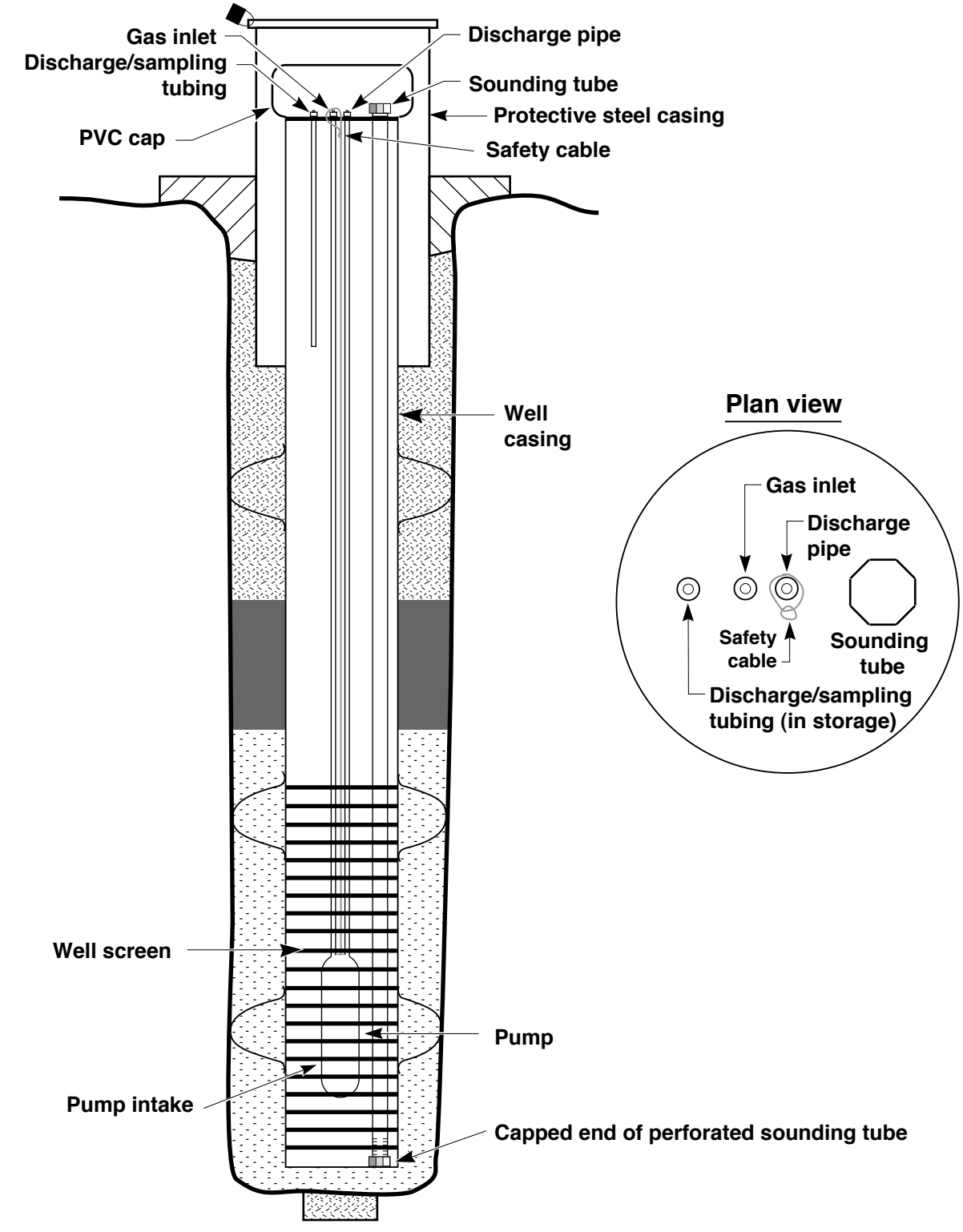

Attachment B. Wellhead completion and pump placement for bladder pumps.

Attachment C

Below Grade Wellhead Completions

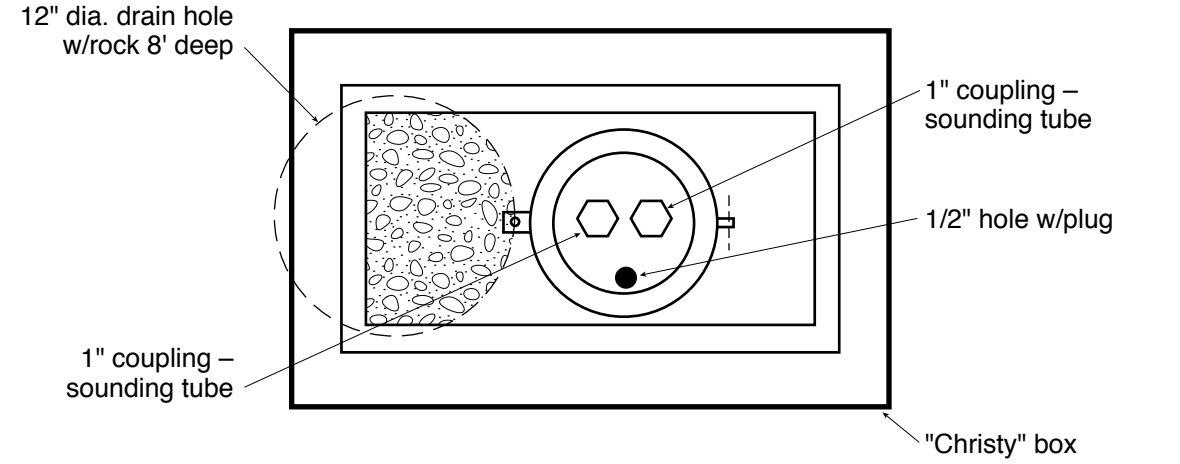

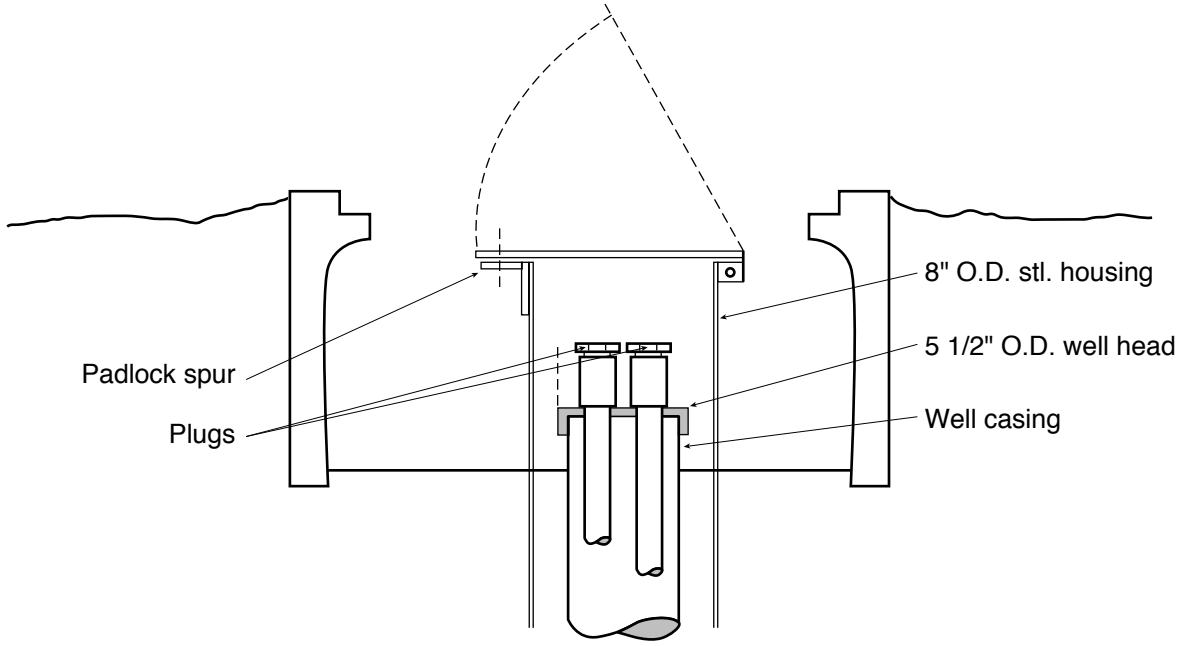

ERD-LSR-01-0001

Attachment C. Below grade wellhead completions.

Attachment D

Wellhead Completion and Pump Placement for Electric Submersible Pumps

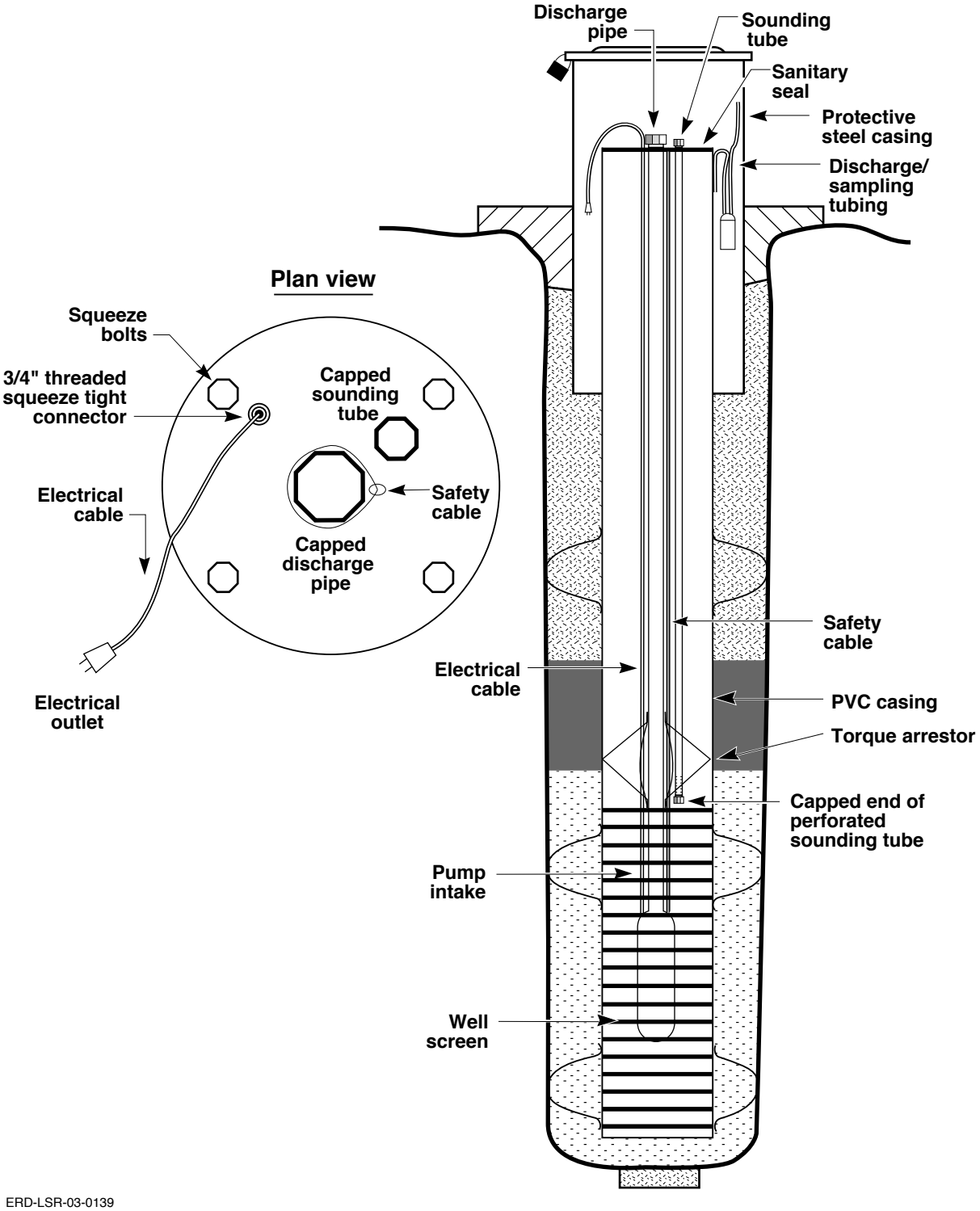

ERD-LSR-03-0139

Attachment D. Wellhead completion (at the Livermore Site) and pump placement for electric submersible pumps.

LLNL Environmental Restoration Department (ERD)
Standard Operating Procedure (SOP)

ERD SOP 2.9: Sampling for Tritium in Ground Water—Revision: 7

AUTHOR(S):
S. Gregory, E. Walter, G. Howard

APPROVALS: **Date**

Jesse Yow 1/7/09
Department Manager

[signature] 11-19-08
Engineering & Operations Division Leader

CONCURRENCE: **Date**

Rebecca Goodrich 12/3/08
QA Implementation Coordinator

Type of Procedure (per ES&H Manual, Document 3.4)

☒ **Informational Use** ☐ **General Use** ☐ **Continuous Use**

1.0 PURPOSE

The purpose of this SOP is to define the procedures for the collection of ground water samples for tritium analysis that are representative of the aquifer of interest.

2.0 APPLICATIONS

This procedure applies to the collection of water samples to be analyzed for tritium. ERD work activities are conducted within the framework of the institutional Integrated Safety Management System (ISMS). The Environmental Management System (EMS) is a component of the ISMS, which is also supported during the planning, performing, and evaluation of the work processes.

3.0 REFERENCES

3.1 Morse, S.I. (1997), San Francisco Bay Regional Water Quality Control Board, Toxics Cleanup Division; letter to Interested Parties. Subject: *Utilization of Non-Purge Approach for Sampling of Monitoring Wells Impacted by Petroleum Hydrocarbons, BTEX, and MTBE,* File: 1123.64, January 31, 1997.

3.2 Robbins, G.A. and J.M. Martin-Hayden (1991), Mass Balance Evaluation of Monitoring Well Purging: Part 1. Theoretical Models and Implications for Representative Sampling, *J. Contam. Hydrol.* 8, 203–224.

3.3 Schilling K.E. (1995), Low-Flow Purging Reduces Management of Contaminated Groundwater, *Environmental Protection*, December 1995.

3.4 Taffet, M., J.A. Oberdorfer, T.M. Carlsen, W.R. Dugan, and R.S. Mateik (1990), *Remedial Investigation of the Building 850/East Firing Area, Lawrence Livermore National Laboratory Site 300,* Lawrence Livermore National Laboratory, Livermore, Calif. (UCRL-ID-104335).

3.5 U.S. Environmental Protection Agency (EPA) (1996), Low-Flow (Minimal Drawdown) Ground-Water Sampling Procedures, *Ground Water Issue*, EPA/540/S-95/504.

3.6 U.S. Environmental Protection Agency (EPA) (1995), *Use of Low-Flow Methods for Ground Water Purging and Sampling: An Overview*, Quick Reference Advisory (December 1995).

4.0 DEFINITIONS

See SOP Glossary.

5.0 RESPONSIBILITIES

5.1 Department Manager (DM)

The DM's responsibility is to ensure that all activities performed by ERD at the Livermore Site and Site 300 are performed safely and comply with all pertinent regulations and procedures, and provide the necessary equipment and resources to accomplish the tasks described in this procedure.

5.2 Project Leader (PL)

The PL's responsibility is to ensure that all activities are performed safely and comply with all pertinent regulations and procedures, work is authorized through an Integration Work Sheet (IWS), and there is sufficient funding to initiate the work.

5.3 Engineering and Operations Division Leader (EODL)

The EODL's responsibility is to ensure that proper procedures are followed for activities (e.g., construction, activation, facility operation and sampling).

5.4 Sampling Coordinator (SC)

The SC's responsibility is to supply a quarterly Sampling Plan to the Field Personnel and track sample collection throughout the quarter to ensure completion of the sampling plan within the specified sampling quarter.

5.5 Field Personnel (FP)

The FP are responsible for properly performing ground water tritium sampling in compliance with all applicable regulations and procedures.

6.0 PROCEDURES

6.1 Preparation

6.1.1 Prior to commencement of field activities, perform preparation activities described in SOP 4.1, "General Instructions for Field Personnel," including participation in the ERD Field Investigation Orientation Lesson Plan (course number EP7033-05).

6.1.2 Review all pertinent sampling information, such as the quarterly Sampling Plan and electronically generated Ground Water Sampling Data Sheets. The plan contains the following information:

- Locations to be sampled.
- Proposed sampling methods (See SOP 2.1, "Pre-sample Purging of Wells," Attachment A, Methodology Sampling Codes).
- Requested analyses.
- Contract analytical laboratory (CAL) to which samples are to be sent for analyses.
- Estimated amount of purge water to be collected, and where and how it will be treated.
- Current technical information for each well.

6.1.3 Obtain appropriate data collection forms i.e., Chain-of-Custody (CoC) forms, Ground Water Sampling Data Sheets (SOP 2.1, Attachment B), assigned Document Control Logbook, labels, and any necessary shipping forms. Instructions for completing the logbook entries and field forms are provided in SOP 4.2, "Sampling Control and Documentation."

6.1.4 The appropriate number and type of sample containers needed for the sampling event should be obtained from the sample bottle inventory. The type of analysis for which a sample is being collected determines the type of bottle, preservative, holding time, and filtering requirement. See SOP 4.3, "Sample Containers and Preservation."

6.1.5 The appropriate personnel should keep a sufficient stock of sample containers and maintain an inventory of supplies (e.g., trip blanks, field blank water ordered from

the contract analytical laboratory [CAL] or B151 onsite lab, plastic bags, etc.) to ensure adequate sampling supplies are available at all times.

6.2. Safety Considerations

6.2.1 Personnel shall meet all training requirements; review the appropriate Site Safety Plan (SSP), all applicable SOPs, and Integration Work Sheets (IWSs) prior to performing work.

6.2.2 Work activities described by this SOP shall be conducted in accordance with IWS 11577 "Compliance Driven Groundwater Sampling and Water Level Measurement" at the Livermore Site and LLNL IWS 11343 "Routine Groundwater Sampling and Water Level Monitoring" at Site 300.

6.3 Field Preparation

6.3.1 Check with the Facility point of Contact (FPOC) or the Functional Area Supervisor (FAS) for area access and insure that permission for offroad travel has been granted, if applicable per SOP 4.1, "General Instruction for Field Personnel". The Administrative Escort Services must be given a 24-hour notification before work is scheduled in restricted areas at Site 300.

6.3.2 Assemble all necessary supplies, packing materials, and appropriate sampling equipment. Load into the field sampling vehicle. Refer to Equipment Checklist (Attachment A).

6.3.3 Decontaminate any nondedicated equipment that will be used per SOP 4.5, "General Equipment Decontamination."

6.3.4 Locate monitor wells to be sampled and choose most efficient sampling order. Sample from areas with the lowest tritium activity to the areas with the highest activity, if possible.

6.3.5 Fill-out any initial information in the Document Control Logbook per instructions in SOP 4.2.

6.4 Operation

If the well contains a dedicated bladder or electric submersible pump, only enough presample purging is done to remove all stagnant water residing in the discharge line of the pump. However, many of the monitor wells do not have dedicated purging/sampling equipment. For these wells, samples are collected using a bailer or by attaching a sample container to the probe of an electric water level indicator.

6.4.1 Sample Collection with Electric Submersible Pump or Bladder Pump

The collection of tritium samples using these two devices is consistent with that described in SOP 2.3, "Sampling Monitor Wells with Bladder and Electric Submersible Pumps." When using the electric submersible or bladder pump, purge the required volume of water prior to sample collection to remove stagnant water from the discharge line. Collect and treat water per SOP 4.7A, "Livermore Site Treatment and Disposal of Well Development and Well Purge Fluids," or SOP 4.7B, "Site 300 Treatment and Disposal of Well Development and Well Purge Fluids."

6.4.2 Sample Collection with Bailer

Bailing is described in SOP 2.4, "Sampling Monitor Wells with a Bailer." This procedure is generally followed in sampling for tritium in ground water, except that no presample well purging is necessary.

6.4.3 Sample Collection with Water Level Indicator

Attaching a 40 mL volatile organic analysis (VOA) vial to the probe of an electric water level indicator with a polyethylene cable tie is a simple means of sampling for tritium.

A. Uncap and attach a clean sample container to the probe of the water level indicator using a polyethylene cable tie. The container should be attached about 3 to 4 in. from the tip of the probe if a water level measurement is to be obtained during sample collection (Refer to SOP 3.1, "Water-Level Measurements").

B. Slowly lower the probe and sample container into the monitor well. Lower the container so it will fill completely, and then slowly reel the probe and container back to the surface.

C. Detach the container from the water level probe and cap container. Clean the water level indicator as discussed in SOP 3.1.

D. Immediately label the sample container, place into a air tight plastic bag, and store in a cooler (refer to SOP 4.3).

E. Record all sampling information (e.g., well ID, method of collection, and date) per SOP 4.2, in the Document Control Logbook and Ground Water Sampling Data Sheet (SOP 2.1, Attachment B).

6.4.4 Tritium Sample Collection With a Specific-Depth Sampling Device

No pre-sample purge is required when using this device. The sample is taken from a specific portion of the screened interval (refer to SOP 2.6, 6.4.2 D, "Sample Retrieval—Specific-Depth Grab Sample Device").

6.5 Post Field Operation

6.5.1 Perform post operation activities per SOP 4.1.

6.5.2 Before leaving the sampling location, verify that the appropriate samples have been collected according to the samples scheduled on the Ground Water Sampling Data Sheets.

6.5.3 Prior to sampling another site and to prevent cross contamination of equipment between locations, thoroughly decontaminate all equipment that is not dedicated according to SOP 4.5.

6.5.4 Complete the appropriate Ground Water Sampling Data Sheet and record sampling information in the assigned Document Control Logbook (SOPs 2.1 and 4.2).

6.5.5 Verify that the CoC is appropriately completed per SOP 4.2. Indicate any special instructions in the Remarks Section of the CoC. Such instructions may include a request for the laboratory to filter and preserve the sample upon receipt or to analyze trip blanks only if hits are detected in associated samples.

6.5.6 Deliver Ground Water Sampling Data Sheets and CoC forms to the SC daily. The SC will provide copies to the Technical Release Representative (TRR) daily if possible, but no less than once per week.

6.5.7 The SC will retain a copy of the original forms (CoC, Ground Water Sampling Data Sheets), and provide the originals to the Data Management Team (DMT) for final archive. The DMT will provide copies of the forms to the appropriate Environmental Protection Department Analyst, as necessary.

6.5.8 Leave routine samples and proper documentation in the environmental sample drop-off shed for the CAL. Field Personnel will ship samples and/or distribute to the appropriate laboratories. Ensure that the samples requiring refrigeration remain at 4°C ± 2°C, but do not allow them to freeze. Always ensure that proper chain of custody is maintained.

7.0 QA RECORDS

7.1 Document Control Logbooks

7.2 Ground Water Sampling Data Sheets

7.3 Chain-of-Custody form

8.0 ATTACHMENT

Attachment A—Equipment Checklist

Attachment A

Equipment Checklist

Equipment Checklist

____ Generator

____ Two-way radio

____ Water-level indicator

____ Indicator refence bar

____ Polyethylene cable ties

____ Ziploc-type bags

____ 40 mL VOA vials or other appropriate glass sample containers

____ Coolers

____ Deionized water

____ Document control logbook

____ Tool kit

____ Disposable latex gloves

____ Snake chaps (if necessary)

____ Squirt bottle

____ Detergent soap

____ Pencils, pens

____ Sample labels

____ Paper towels

____ Bailer/rope

LLNL Environmental Restoration Department (ERD)
Standard Operating Procedure (SOP)

ERD SOP 2.10: Well Disinfection and Coliform Bacteria Sampling—Revision: 4

AUTHOR(S):
R. Goodrich

APPROVALS: **Date**

Jem Yow — 1/7/09
Department Manager

Ed Folsom — 11-19-08
Engineering & Operations Division Leader

CONCURRENCE: **Date**

Rebecca Goodrich — 12/3/08
QA Implementation Coordinator

Type of Procedure (per ES&H Manual, Document 3.4)

☒ Informational Use ☐ General Use ☐ Continuous Use

1.0 PURPOSE

The purpose of this SOP is to describe a chlorination procedure to disinfect monitor wells prior to collecting ground water samples that will be analyzed for coliform bacteria as recommended in Appendix C of the manual, *"Water Well Standards: State of California."*

2.0 APPLICABILITY

This procedure is applicable to the disinfection of monitor wells prior to sampling for total and fecal coliform bacteria. ERD work activities are conducted within the framework of the institutional Integrated Safety Management System (ISMS). The Environmental Management System (EMS) is a component of the ISMS, which is also supported during the planning, performing, and evaluation of the work processes.

3.0 REFERENCES

3.1 Driscoll, G.F. (1986), *Groundwater and Wells*, Second Edition, Johnson Division, St. Paul, Minn.

3.2 Lamarre, A.L. (1989), *Sampling and Analysis Plan for Coliform Bacteria in Water From Selected Site 300 Monitor Wells*, Memo, Lawrence Livermore National Laboratory, Livermore, Calif.

3.3 State of California Department of Water Resources Agency (1981), Appendix C, Manual, "Water Well Standards: State of California," Sacramento, Calif.

4.0 DEFINITIONS

See SOP Glossary.

5.0 RESPONSIBILITIES

5.1 Department Manager (DM)

The DM's responsibility is to ensure that all activities performed by ERD at the Livermore Site and Site 300 are performed safely and comply with all pertinent regulations and procedures, and provide the necessary equipment and resources to accomplish the tasks described in this procedure.

5.2 Project Leader (PL)

The PL's responsibility is to ensure that all activities are performed safely and comply with all pertinent regulations and procedures, work is authorized through an Integration Work Sheet (IWS), and there is sufficient funding to initiate the work.

5.3 Engineering and Operations Division Leader (EODL)

The EODL's responsibility is to ensure that proper procedures are followed for activities (e.g., construction, activation, facility operation and sampling).

5.4 Sampling Coordinator (SC)

The SC's responsibility is to supply a quarterly Ground Water Sampling Plan, which includes the wells to be sampled for coliform bacteria. A spreadsheet indicating the amount of disinfectant to apply to each well prior to sampling for coliform bacteria is also provided by the SC.

5.5 Field Personnel (FP)

The FP are responsible for properly performing ground water tritium sampling in compliance with all applicable regulations and procedures.

5.6 Field Support Personnel (FSP)

The FSP are responsible for providing necessary equipment, collection devices and general field support which enables personnel to perform field activities in a timely and efficient manner.

6.0 PROCEDURES

At the direction of the SC, the designated wells are disinfected in preparation for coliform bacteria sampling. The wells are disinfected to remove any bacteria within the well casing. Each well will receive a dose of chlorine solution containing at least 100 mg/L of available chlorine. A calculation will be made to determine the appropriate amount of chlorine to add based upon the amount of water standing in the well casing.

6.1 Preparation

6.1.1 Prior to commencement of field activities, perform preparation activities described in SOP 4.1, "General Instructions for Field Personnel," including participation in the ERD Field Investigation Orientation Lesson Plan (course number EP7033-05).

6.1.2 The wells to be sampled for coliform bacteria will be included in the quarterly Sampling Plan provided by the SC. Prior to sample collection, all calculations will be made and appropriate chlorination performed.

6.1.3 A 5.25 % sodium hypochlorite solution (standard household bleach) is routinely used. The U.S. EPA recommends using a solution with a minimum concentration of 100 mg/L for proper sterilization. The following formula is used to calculate the quantity of sodium hypochlorite to be added to the well:

Volume hypochlorite (oz.) = (W) (64) (R/P)

where

W = water volume in well (gal),

R = required hypochlorite concentration in the well (decimal), and

P = Percent available chlorine (decimal).

6.1.4 When using the above equation, the required hypochlorite concentration and percent available chlorine should be in decimal form. For example: 100 mg/L = 100 ppm = 100/1,000,000 = 0.0001; percent available chlorine of 5.25% = 0.0525. The volume (gal) is the amount of water in the well casing (casing volume) and is calculated as per ERD SOP 2.1, "Presample Purging of Wells." These calculations should be documented on the appropriate field forms.

6.1.5 Inform the contract analytical laboratory ahead of time to allow for preparation when collecting samples on a rush turn-around time or samples having short hold times.

6.1.6 In consultation with the SC and Field Support Personnel, ensure that adequate containment devices are available at the wellhead for purge water collection. The quantity of purge water to be collected for each well is listed in the Routine Sampling Schedule.

6.1.7 Ensure that an adequate amount of 5.25% sodium hypochlorite (standard household bleach) is on hand, according to the calculated dosages of the required solution. If 5.25% sodium hypochlorite is not available, it is acceptable to use a higher percent concentration of chlorine solution, such as 6% sodium hypochlorite (also considered standard laundry household bleach). The above calculation will be adjusted accordingly from 5.25% to 6.0% Use a fresh supply for every sampling event.

6.1.8 Ensure the availability of a pool test kit with the appropriate solution to test for chlorine in water which measures in the ppm range.

6.2. Safety Considerations

6.2.1 Personnel shall meet all training requirements; review the appropriate Site Safety Plan (SSP), all applicable SOPs, and Integration Work Sheets (IWSs) prior to performing work.

6.2.2 Work activities described by this SOP shall be conducted in accordance with IWS 11577 "Compliance Driven Groundwater Sampling and Water Level Measurement" at the Livermore Site and LLNL IWS 11343 "Routine Groundwater Sampling and Water Level Monitoring" at Site 300.

6.3 Operation

6.3.1 Add the calculated amount of 5.25% or 6.0% sodium hypochlorite to the well. Use the pump to recirculate the water to ensure thorough mixing of the disinfectant with the well water. Turn the pump on and off several times during this procedure.

6.3.2 After disinfection, the water in each well will be allowed to stand for 24 hours. After 24 hours the water should be pumped until the presence of chlorine is no longer detectable. Test for the presence of chlorine by using a pool test kit according to manufacturers instructions. Once the water is free of residual chlorine, a coliform bacteria sample may be collected in a pre-sterilized polyethylene container provided by the analytical laboratory as described in ERD SOP 4.3, "Sample Containers and Preservation."

6.3 Post Operation

6.3.1 Perform post operation per SOP 4.1.

6.3.2 Before leaving the sampling site, cross check sample containers with those recorded in the logbook.

6.3.3 To maintain and document sample custody, follow the procedure for completing a Chain-of-Custody (CoC) form in SOP 4.2, "Sample Control and Documentation."

6.3.4 After all samples are collected and preserved as necessary, any non-dedicated sampling equipment should be decontaminated prior to sampling another site in order to prevent cross-contamination of equipment between locations (see SOP 4.5, "General Equipment Decontamination").

6.3.5 Deliver all field logbook notes (upon request), Ground Water Sampling Data Sheets, and (CoC) forms to the SC daily.

6.3.6 The SC will retain copies of the Ground Water Sampling Data Sheets and provide the originals to the Data Management Team (DMT) for final archive. The DMT will provide copies of the forms to the appropriate Environmental Protection Department Analyst, as necessary.

6.3.7 Submit the coliform samples to the analytical laboratory as soon as possible due to the short holding time for coliform analyses (6 hours).

7.0 QA RECORDS

7.1 Ground Water Sampling Data Sheets

7.2 Document Control Logbooks

7.3 Chain-of-Custody Forms

8.0 ATTACHMENTS

Not applicable.

LLNL Environmental Restoration Division (ERD)
Standard Operating Procedure (SOP)

ERD SOP 2.12: Ground Water Monitor Well and Equipment Maintenance—Revision: 3

AUTHOR(S):
S. Gregory and E. Walter

ENVIRONMENTAL RESTORATION DIVISION
CONTROLLED COPY
_____
THIS IS A RED STAMP
ERD

APPROVALS: **Date**

Albert J Lamarre 9/5/03
Division Leader

[signature] 9/3/03
Environmental Chemistry and Biology Group Leader

CONCURRENCE: **Date**

Rebecca Goodrich 8/26/03
QA Implementation Coordinator (Acting)

1.0 PURPOSE

The purpose of this SOP is to set up a process where all monitor wells and purging/sampling equipment are routinely maintained and are free of potential hazards. These processes will ensure that all ground water sampling activities can take place according to all applicable SOPs without interruptions from equipment failure or personal injury.

2.0 APPLICABILITY

This procedure describes required maintenance and schedules for environmental monitor wells and related equipment. The procedures will be implemented by field support personnel.

3.0 REFERENCES

Not applicable.

4.0 DEFINITIONS

See SOP Glossary.

5.0 RESPONSIBILITIES

5.1 Division Leader

The Division Leader's responsibility is to ensure that all activities performed by ERD at the Livermore Site and Site 300 are performed safely and comply with all pertinent regulations and procedures, and provide the necessary equipment and resources to accomplish the tasks described in this procedure.

5.2 Data Management Team (DMT)

The DMT's responsibilities are to maintain and store the Well Maintenance form (Attachment A).

5.3 Field Support Personnel

The field support personnel's responsibilities are to provide the appropriate equipment, collection devices, and general field support to assure that field activities are performed in a timely and efficient manner.

5.4 Field Personnel/Sampling Coordinator (SC)

The field personnel and/or SC are responsible for initiating repair requests. Well site inspections are generally performed by field personnel.

5.5 Field Operations Manager (FOM)

The FOM is responsible for scheduling field support personnel to perform well maintenance and pump repair activities as necessary.

6.0 PROCEDURES

6.1 Well Site Inspection

6.1.1 Frequency

- Field personnel are to visually inspect the well site each time the well is entered.
- A formal inspection of a percentage of the well sites will be performed annually to assess the condition of the installations and equipment.

6.1.2 Field Personnel Inspection

Field Personnel are to inspect for the following:

- Well accessibility
- Noticeable hazards

- Correct and legible well ID
- Well condition
- Well security
- Faulty or missing equipment
- Collection barrel condition (when applicable)

Note: If the inspection reveals unsafe conditions–Do Not Access the Well and contact the SC or the Site Safety Officer immediately.

6.1.3 Documentation

When a problem is discovered, a Well Maintenance form (Attachment A) should be initiated and forwarded to the FOM with a copy to the SC.

6.2 Well Site Maintenance

6.2.1 Frequency

Well site maintenance activities are prioritized by the SC as needed.

6.2.2 Maintenance

The field support personnel will perform the maintenance, repairs, or replacement necessary to correct the problems identified. The field personnel may make some minor repairs themselves when agreed upon by the FOM and SC (e.g., Well Entry Logbook replacement, locks, sanitary seals, caps, plugs, etc.).

6.2.3 Documentation

The Well Maintenance form initiated as a result of the well site inspection will be completed by the field support personnel and forwarded to DMT with a copy to the SC.

6.3 Routine Sampling Equipment Maintenance

6.3.1 Frequency

Routine preventative maintenance is scheduled quarterly and is the responsibility of the field personnel and/or the SC.

6.3.2 Maintenance

The following maintenance is performed at the required frequency:

- Perform all manufacturer recommended maintenance.
- Change Honda electrical generator oil and air filters.
- Visually inspect equipment for safety hazards (i.e., exposed wires, etc.).

- Maintain Honda engine-driven air compressor according to the maintenance schedule (Attachment B).
- Repair or replace defective or damaged equipment.

6.3.3 Documentation

- After maintenance has been performed by Plant Engineering, a maintenance sticker should be affixed to the equipment listing the date of service.

6.4 Well Maintenance Form Archival

The field support personnel should complete the well maintenance form when all repair, replacement, or maintenance activities are finished and forward the form to DMT. DMT will archive the form. The field support personnel should also send the SC a copy of the completed form so that the SC can reschedule sampling activities when necessary.

6.5 Post Maintenance Activities

6.5.1 Any time a pump is removed from a monitor well, the well should be sounded with a weighted tape to verify the total depth of the well.

6.5.2 Installation changes, such as a different pump intake depth or a different pump type recorded on the well maintenance form by the field support personnel needs to be recorded in the EPD DATA base by DMT.

7.0 QA RECORDS

7.1 Well Maintenance/Pump Repair Tracking Form

8.0 ATTACHMENTS

Attachment A—Well Maintenance Form

Attachment B—Maintenance Schedule for Honda Motor for Compressor Unit

Attachment A

Well Maintenance Form

Well Maintenance/Pump Repair Tracking Form

Location: _____

Repair Request: **Request Date:** _____

_____

_____

_____

Repair/Installation Requested by: _____

Description of repair/etc.: **Completed Date:** _____

_____

_____

_____

During pump replacement activities please provide the following data: (All measurements from top fixed structure)

Sounded casing depth: _____
Pump intake depth: _____
Pump type/HP/voltage: _____
Pump started on: _____
Date

Original to Data Management Team (DMT) T4383 L-528

Provide copies to: Greg Howard or Eric Walter _____
circle one and/or specify other

Attachment B

Maintenance Schedule for Honda Motor for Compressor Unit

The purpose of the maintenance and adjustment schedule is to keep the engine in good operating condition. Inspect or service as scheduled in the table below.

WARNING — Shut off the engine before performing any maintenance. If the engine must be run, make sure the area is well ventilated. The exhaust contains poisonous carbon monoxide gas.

CAUTION — Use only genuine HONDA parts or their equivalent. The use of replacement parts which are not of equivalent quality may damage the engine.

Maintenance Schedule

REGULAR SERVICE PERIOD Performed at every indicated month or operating hour interval, whichever comes first. / ITEM		Each day of use	First month or 20 hours	Every 3 months or 50 hours	Every 6 months or 100 hours	Every year or 300 hours
Engine Oil	Check level	O				
	Change				O	
Reduction gear oil (applicable models only)	Check level	O				
	Change		O			O
Air cleaner	Check	O				
	Clean			O (1)		
Sediment cup	Clean				O	
Spark plug	Check clean				O	
Spark arrestor (optional part)	Clean				O	
Valve clearance	Check-Adjust					O (2)
Fuel tank and strainer	Clean					O (2)
Fuel line	Check (Replace if ecessary)	Every 3 years (2)				

NOTE: (1) Service more frequently when used in dusty areas.
(2) These items should be serviced by an authorized Honda dealer, unless the owner has the proper tools and is mechanically proficient. See the Honda Shop Manual.

LLNL Environmental Restoration Department (ERD)
Standard Operating Procedure (SOP)

ERD SOP 2.13: Barcad Sampling—Revision: 3

AUTHOR(S):
E. Walter

ENVIRONMENTAL RESTORATION DEPARTMENT
CONTROLLED COPY
_____
THIS IS A RED STAMP
ERD

APPROVALS:	Date
Department Manager	1/7/09
Engineering & Operations Division Leader	11-19-08

CONCURRENCE:	Date
QA Implementation Coordinator	12/3/08

Type of Procedure (per ES&H Manual, Document 3.4)

☒ Informational Use ☐ General Use ☐ Continuous Use

1.0 PURPOSE

The purpose of this SOP is to define barcad sampling procedures that will ensure collection of a representative ground water sample.

2.0 APPLICABILITY

This SOP procedure applies to the use of barcads for ground water sample collection. Barcads are generally used where it is desirable to install more then one discrete sampling device in multiple water bearing zones within a single borehole. ERD work activities are conducted within the framework of the institutional Integrated Safety Management System (ISMS). The Environmental Management System (EMS) is a component of the ISMS, which is also supported during the planning, performing, and evaluation of the work processes.

3.0 REFERENCES

3.1 Raber, E. and D. Carpenter (1983), *An Evaluation of the Hydrogeology and Ground Water Chemistry Associated with Landfills at LLNL's Site 300* (UCRL-53416).

3.2 Christofferson, E. and D. Ramsey (1992), "Procedures Manual for the Environmental Monitoring Section—EMP-GW-S, Ground Water Sampling."

4.0 DEFINITIONS

See SOP Glossary.

5.0 RESPONSIBILITIES

5.1 Department Manager (DM)

The DM's responsibility is to ensure that all activities performed by ERD at the Livermore Site and Site 300 are performed safely and comply with all pertinent regulations and procedures, and provide the necessary equipment and resources to accomplish the tasks described in this procedure.

5.2 Project Leader (PL)

The PL's responsibility is to ensure that all activities are performed safely and comply with all pertinent regulations and procedures, work is authorized through an Integration Work Sheet (IWS), and there is sufficient funding to initiate the work.

5.3 Engineering and Operations Division Leader (EODL)

The EODL's responsibility is to ensure that proper procedures are followed for activities (e.g., construction, activation, facility operation and sampling).

5.4 Sampling Coordinator (SC)

The SC's responsibilities are to ensure that the field personnel have been properly trained; they comply with all applicable regulations and procedures, and supply a quarterly Barcad Sampling Schedule.

5.2 Field Personnel (FP)

The FP are responsible for properly performing Barcad sampling in compliance with all applicable regulations and procedures to insure the samples and data provided are representative of the actual conditions.

6.0 PROCEDURES

6.1 Discussion

Barcads are ordinarily set up as multiple completions, but usually there are no more than two per borehole. They are used for sampling discrete water-bearing zones within the same or separate hydrologic unit(s) to determine the presence of contaminants. FP operating Barcads should have completed a lab course, "Pressure Safety Orientation" (HS5030-W) prior to using compressed nitrogen gas.

Barcads exist at Site 300 and are located in the East Firing Area (EFA). No equipment decontamination is necessary for Barcads. All equipment that comes in contact with the ground water is dedicated to each installation. Because the nitrogen gas comes in direct contact with the ground water, Barcads are not appropriate for the collection of VOC samples.

6.2 Preparation

6.2.1 Prior to commencement of field activities, perform preparation activities described in SOP 4.1, "General Instructions for Field Personnel," including participation in the ERD Field Investigation Orientation Lesson Plan (course number EP7033-05).

6.2.2 Perform preparation activities per SOP 4.1, "General Instructions for Field Personnel."

6.2.3 Determine the number and type of sample bottles that will be needed per SOP 4.3, "Sample Container and Preservation."

6.2.4 Assemble and load appropriate sampling containers and equipment into the sampling vehicle. See Attachment A for equipment checklist.

6.2.5 Locate Barcads to be sampled and choose the most efficient sampling order.

6.2.6 Fill out initial information in Document Control Logbook per instructions in SOP 4.2, "Sample Control and Documentation."

6.3. Safety Considerations

6.3.1 Personnel shall meet all training requirements; review the appropriate Site Safety Plan (SSP), all applicable SOPs, and Integration Work Sheets (IWSs) prior to performing work.

6.3.2 Work activities described by this SOP shall be conducted in accordance with IWS 11577 "Compliance Driven Groundwater Sampling and Water Level Measurement" at the Livermore Site and LLNL IWS 11343 "Routine Groundwater Sampling and Water Level Monitoring" at Site 300.

6.4 Operation

6.4.1 Unlock the protective casing, and remove any dirt or debris from the lines and fittings with a clean disposable towel.

6.4.2 Inspect the dedicated sample lines, gauges and the nitrogen cylinder for damage. Perform minor repairs whenever possible and document them in the logbook.

6.4.3 Check the pressure gauge on the nitrogen cylinder. If the gauge reads under 500 PSI, then it is considered insufficient pressure for sampling and the cylinder must be replaced. The nitrogen cylinder must be in an upright position and fixed to a stationary location.

6.4.4 Turn the cylinder valve that opens the nitrogen cylinder to the gas line (refer to Attachment B of this SOP). Open the corresponding discharge valve to purge the line of the Barcad you are sampling, then close the discharge valve of the Barcad you are not sampling. Close the vent valve and open the pressure valve to pressurize the system. Water will soon begin to flow from the discharge line. When the water stops flowing, close the pressure valve and open the vent valve to depressurize the lines. The first purge cycle is now completed. Each discharge line must go through three complete purge cycles. Allow approximately 20 min between purges, although true recovery time may vary 2–20 min between locations. Note the date and times of purge cycles in the Document Control Logbook. Once this has been completed, sampling can be performed on the fourth purge cycle. If bottles were partially filled during sampling, note the time and approximate amount in the Ground Water Sampling Data Sheets (refer to SOP 2.1, Attachment C "Pre-sample Purging of Wells,") and repeat the purging process as often as necessary. Follow the same sequence for sampling the second Barcad of the installation.

6.4.5 When sampling is complete, turn the nitrogen cylinder valve to the "close" position. Depressurize the lines by turning all other valves to the "open" position. Close and lock the protective box.

6.5 Post Operation

6.5.1 Perform post operation activities per SOP 4.1.

6.5.2 Review field forms for completeness and distribute per SOP 4.2.

6.5.3 Cross-check the sample bottles with those recorded on the Ground Water Sampling Data Sheets before leaving the sampling site. Store and ship samples per SOP 4.4, "Guide to the Handling, Packaging, and Shipping of Samples."

6.5.4 Inventory sampling supplies and replace expendable items.

7.0 QA RECORDS

7.1 Chain-of-Custody Forms

7.2 Document Control Logbooks

7.3 Ground Water Sampling Data Sheets

8.0 ATTACHMENTS

Attachment A—Equipment Checklist

Attachment B—Barcad Completion

Attachment A

Equipment Checklist

Equipment Checklist

____ Two-way radio

____ Sample labels

____ Sample containers

____ Ice chests and blue ice

____ Document control logbook

____ CoC form

____ Ground Water Sampling Data Sheet

____ Disposable towels

____ Tool kit

____ Snake chaps (when necessary)

____ Vinyl gloves

____ Appropriate maps

____ Pencils/pens

Attachment B

Barcad Completion

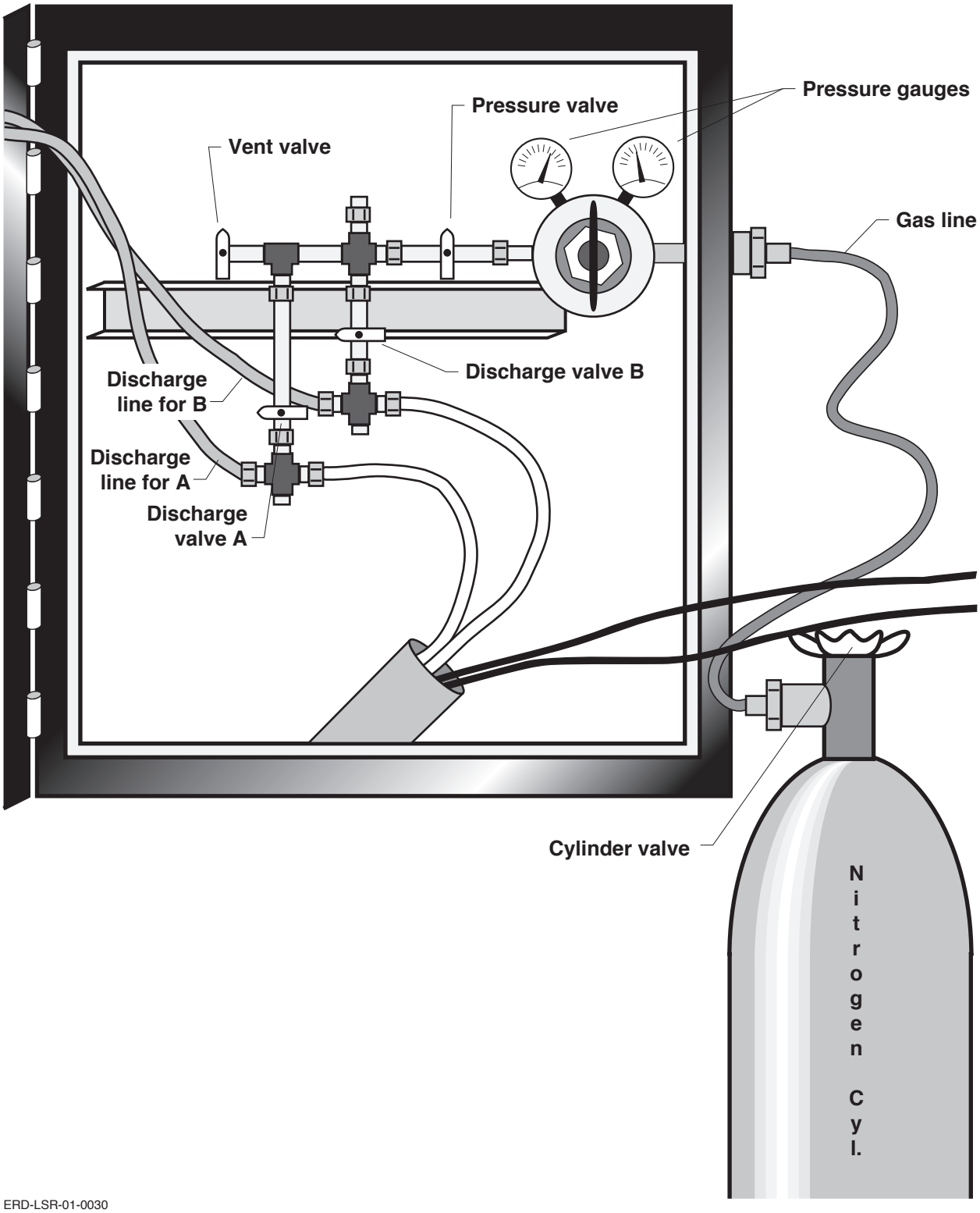

ERD-LSR-01-0030

Attachment B. Barcad completion showing details inside wellhead box.

LLNL Environmental Restoration Division (ERD)
Standard Operating Procedure (SOP)

ERD SOP 3.1: Water-Level Measurements—Revision: 7

AUTHOR(S):
E. Walter

ENVIRONMENTAL RESTORATION DIVISION
CONTROLLED COPY
#
THIS IS A RED STAMP
ERD

APPROVALS:	Date
Division Leader	6/30/06
Hydrogeology & Decision Support Group Leader	4/10/06

CONCURRENCE:	Date
QA Implementation Coordinator	6/21/06

1.0 PURPOSE

The purpose of this SOP is to determine the depth to water from a standard point of measurement (POM) in an open borehole, cased borehole, monitor well, or piezometer.

2.0 APPLICABILITY

This SOP applies to the usage of an electronic water-level indicator to collect ground water elevation data for use during ground water sampling, as well as for use in constructing graphical displays (i.e., potentiometric surface maps and monitor well hydrographs). ERD work activities are conducted within the framework of the institutional Integrated Safety Management System (ISMS). The Environmental Management System (EMS) is a component of the ISMS, which is also supported during the planning, performing, and evaluation of the work processes.

3.0 REFERENCES

3.1 U.S. EPA (1986), *RCRA Ground Water Monitoring Technical Enforcement Guidance Document*, Washington, D.C.

3.2 U.S. EPA (1992), *RCRA Ground Water Monitoring: Draft Technical Guidance*, Washington, D.C. (EPA/530-R-93-001).

4.0 DEFINITIONS

See SOP Glossary.

5.0 RESPONSIBILITIES

5.1 Division Leader (DL)

The DL's responsibility is to ensure that all activities performed by ERD at the Livermore Site and Site 300 are performed safely, comply with all pertinent regulations and procedures, and provide the necessary equipment and resources to accomplish the tasks described in this procedure.

5.2 Project Leader (PL)

The PL's responsibility is to ensure that all activities are performed safely and comply with all pertinent regulations and procedures, work is authorized through an IWS, and there is sufficient funding to initiate the work.

5.3 Field Personnel (FP)

While at the well site, any needed repairs should be recorded on the Well Maintenance form and submitted to the Field Operations Manager with a copy to the Sampling Coordinator. The field personnel are responsible for properly performing water-level measurements in compliance with all applicable SOPs, IWSs, and any other applicable safety or procedural related documents to ensure that the resulting data accurately represent the true hydrogeologic conditions.

5.4 Aquifer Testing Coordinator (ATC)

The ATC's responsibility is to verify the accuracy of the water-level measurement(s) and compare the new data to historical data and decide if it is consistent or suspect.

5.4 Data Management Team (DMT)

The DMT is responsible for the generation of all applicable Water-Level Measurement Field Sheets used to record the water level data. Upon completion of the water level monitoring, the DMT is also responsible for entering the data into the database. The DMT is responsible for the disposition of the original documents received as a result of performing work activities described by this SOP.

6.0 PROCEDURE

6.1 Preparation

6.1.1 Prior to collecting water-level measurements, perform the applicable preparation activities described in SOP 4.1, "General Instructions for Field Personnel". Personnel who are new to the LLNL project will receive direct field supervision and on-the-job training (OJT) from a Subject Matter Expert (SME) for at least the first 24 hours of field activity using the ERD Field Investigation Orientation Lesson Plan (course number EP7033-05).

6.1.2 If the water-level data are being collected for the entire site, the Water-Level Measurement Field Sheet, obtained from the DMT, should be used (Attachment A). If the data are being collected as part of a hydraulic test, consult SOP 3.2, "Pressure Transducer Field Calibration"; 3.3, "Hydraulic Testing (Slug/Bail)"; or

3.4, "Hydraulic Testing (Pumping)," as appropriate. If the data are being collected during ground water sampling, SOP 2.1, "Pre-sample Purging of Wells" or 2.7, "Pre-sample Purging and Sampling of Low-Yielding Monitor Wells should be followed, as appropriate.

6.1.3 Obtain a Water-Level Measurement Field Sheet that includes the previous month's water levels from the DMT.

6.1.4 The device used to measure water levels should attain an accuracy of 0.01 ft. A steel tape or an electronic water-level indicator can be used to measure water levels, but this SOP concerns only the use of an electronic water-level indicator.

6.1.5 For Site 300, electronic water-level indicators can be acquired at Building 833. When practical, the same portable water-level measurement device should be used for all measurements. However, Site 300 is divided into two areas with respect to water levels. In the northern portion of the site, also referred to as the East/West Firing Area (EWFA), tritium is the prevailing contaminant. The southern portion of the site is predominately contaminated with volatile organic compounds (VOCs). In order to prevent cross contamination between monitor wells, the electronic water-level indicators must be decontaminated according to SOP 4.5, "General Equipment Decontamination." If an indicator is dedicated to a particular section of the site, or a particular well, it will be marked accordingly.

6.1.6 For the Livermore Site, the same water-level device may be used site wide, except in areas of heavy gasoline contamination. In order to prevent cross contamination between monitor wells, the electronic water-level indicators must be decontaminated according to SOP 4.5, "General Equipment Decontamination."

6.1.7 Obtain the equipment on the Equipment Checklist (Attachment B).

6.1.8 Make sure water-level measuring equipment is in good operating condition.

6.1.9 Whenever possible, start at those wells that are the least contaminated and work towards more contaminated areas as indicated by the ATC.

6.1.10 Clean all equipment per SOP 4.5 before use.

6.2 Safety Considerations

6.2.1 The procedures described in the following sections will be conducted in accordance with LLNL Integration Work Sheet (IWS) 11577 "Compliance Driven Groundwater Sampling and Water Level Measurement" at the Livermore Site and LLNL IWS 11343 "Routine Groundwater Sampling and Water Level Monitoring" at Site 300.

6.3 Water-Level Measurement Procedure

6.3.1 Unlock and open the protective casing. Remove the well casing cap.

6.3.2 Make sure there is a Well Entry Logbook inside the protective casing. Replace the old or unusable logbooks and give to the DMT for archival. Write the date, purpose of well entry, and initials in the logbook.

6.3.3 Use the top of the protective casing (stove pipe or Christy Box) as the measuring reference point. This is the POM to be used when obtaining water-level measurements. Any deviation from this measuring point must be documented on the Water-Level Measurement Field Sheet (Attachment A) and reported to DMT and the ATC.

6.3.4 Measure the distance from the water surface to the POM by placing a steel indicator reference bar (or something comparatively straight and rigid) over the top of the protective casing or Christy Box then, lower an electronic water-level indicator into the sounding port. Insertion into the pump discharge line (usually of the same diameter) will give a false reading. Using the electronic water-level indicator, a light (usually red) will shine on the reel of the water-level indicator, and an audible buzz will sound when water is encountered. Slowly move the line up and down along the side of the reference bar until the exact point at which the buzz is heard is located. Using the bottom of the reference bar as the measuring point, obtain the depth-to-water measurement by referencing the markings on the water-level indicator line to the buzzing tone red indicator light. The water level indicator may then be removed and cleaned (per SOP 4.5).

6.3.5 Compare the new measurement to last month's water level as displayed on the Water-Level Measurement Field Sheet (Attachment A) and to previous water-level measurements written in the Well Entry Logbook.

6.3.6 Record measurement, date, and any notes next to last month's water level on the Water-Level Measurement Field Sheet (Attachment A). If the water-level measurement seems suspect or if there is a 0.5 ft difference from the last reading, then re-check water-level measurement. Place a check mark next to the well ID on the Water-Level Measurement Field Sheet to indicate that the measurement was verified.

6.3.7 Record measurement in the Well Entry Logbook and replace logbook in well.

6.3.8 Replace well cap and lock the protective casing and/or replace Christy Box lid.

6.4 Post Operation

6.4.1 Follow post operation activities described in SOP 4.5, Section 6.2.3.

6.4.2 Store water-level indicator in a clean, protected area during transport to the next well and after work is completed.

6.4.3 Forward original Water-Level Measurement Field Sheet to DMT.

7.0 QA RECORDS

7.1 Well Entry Logbook

7.2 Water-Level Measurement Field Sheet

8.0 ATTACHMENTS

Attachment A—Example of Water-Level Measurement Field Sheet

Attachment B—Equipment Checklist

Attachment A

Example of Water-Level Measurement Field Sheet

WELL	New Date	New DTW	Prev DTW	Prev Date	Grndwtr Elev	Shiner Elev	POM Elev	Casing Height	PrevNote	NewNote
W-830-04A	-APR-06		43.44	27-Jan-06	580.66	621.10	624.10	3.00		
W-830-05	-APR-06		25.22	27-Jan-06	559.15	582.37	584.37	2.00		
W-830-07	-APR-06		0	27-Jan-06		631.80	634.80	3.00	DRY	
W-830-09	-APR-06		102.8	23-Jan-06	594.30	694.10	697.10	3.00		
W-830-10	-APR-06		16.07	23-Jan-06	580.63	594.12	596.70	2.58		
W-830-11	-APR-06		33.44	26-Jan-06	562.75	594.69	596.19	1.50		
W-830-12	-APR-06		99.25	23-Jan-06	593.37	692.62	692.62	0.00		
W-830-13	-APR-06		26.19	27-Jan-06	538.32	562.51	564.51	2.00		
W-830-14	-APR-06		20.1	27-Jan-06	545.40	563.50	565.50	2.00		
W-830-15	-APR-06		0.53	27-Jan-06	564.56	565.09	565.09	0.00	CB	
W-830-16	-APR-06		94.2	31-Jan-06	576.68	668.87	670.88	2.01		
W-830-17	-APR-06		109	31-Jan-06	564.22	671.75	673.22	1.47		
W-830-18	-APR-06		0	30-Jan-06		652.49	654.49	2.00	NM/DRILLING	
W-830-19	-APR-06		39.7	23-Jan-06	616.14	655.84	655.84	0.00		
W-830-20	-APR-06		13.47	26-Jan-06	583.49	594.95	596.96	2.01		
W-830-21	-APR-06		0	30-Jan-06		651.93	653.94	2.01	NM/DRILLING	
W-830-22	-APR-06		47.5	23-Jan-06	607.52	655.02	655.02	0.00	CB	
W-830-25	-APR-06		23.7	23-Jan-06	596.64	617.74	620.34	2.60		
W-830-26	-APR-06		66.3	23-Jan-06	592.23	652.53	658.53	6.00		
W-830-27	-APR-06		20.95	23-Jan-06	603.31	620.26	624.26	4.00		
W-830-28	-APR-06		32.65	23-Jan-06	589.51	619.16	622.16	3.00		
W-830-29	-APR-06		593.65	23-Jan-06	67.38	661.03	661.03	0.00	CB	
W-830-30	-APR-06		19.75	23-Jan-06	672.76	692.51	692.51	0.00		
W-830-34	-APR-06		20.4	23-Jan-06	671.95	692.35	692.35	0.00	CB	
W-830-49	-APR-06		37.9	23-Jan-06	628.54	664.44	666.44	2.00		
W-830-50	-APR-06		28.67	26-Jan-06	580.47	607.13	609.14	2.01		
W-830-51	-APR-06		0	30-Jan-06		563.76	567.27	3.51	FL	
W-830-52	-APR-06		0	30-Jan-06		569.87	573.38	3.51	FL	
W-830-53	-APR-06		0	31-Jan-06		572.56	576.07	3.51	NO FL	
W-830-54	-APR-06		52.9	31-Jan-06	550.12	601.03	603.02	1.99		
W-830-55	-APR-06		85.4	31-Jan-06	578.64	662.05	664.04	1.99		
W-830-56	-APR-06		31	27-Jan-06	545.82	574.83	576.82	1.99		
W-830-57	-APR-06		50	23-Jan-06	589.87	636.75	639.87	3.12		
W-830-58	-APR-06		23.7	23-Jan-06	609.38	630.88	633.08	2.20		
W-830-59	-APR-06		54.8	23-Jan-06	611.31	666.11	666.11	0.00		
W-830-60	-APR-06		45	27-Jan-06	592.39	635.41	637.39	1.98		
W-831-01	-APR-06		130.8	23-Jan-06	642.69	770.49	773.49	3.00		
W-830-1730	-APR-06		24.58	11-Jan-06	523.52	546.10	548.10	2.00		
W-830-1807	-APR-06		31.9	23-Jan-06	661.10	691.00	693.00	2.00		
W-830-1829	-APR-06		51.35	23-Jan-06	607.65	657.00	659.00	2.00		
W-830-1830	-APR-06		55.1	23-Jan-06	605.90	661.00	661.00	0.00		
W-830-1831	-APR-06		164.2	31-Jan-06	580.51	742.71	744.71	2.00		
W-830-1832	-APR-06		159.1	31-Jan-06	590.77	747.87	749.87	2.00		
W-832-01	-APR-06		35.7	23-Jan-06	670.36	704.06	706.06	2.00		
W-832-05	-APR-06		32.45	23-Jan-06	686.22	718.67	718.67	0.00	CB	
W-832-06	-APR-06		26.2	23-Jan-06	694.65	720.85	720.85	0.00		
W-832-09	-APR-06		72.45	23-Jan-06	634.77	705.22	707.22	2.00		
W-832-10	-APR-06		36.75	23-Jan-06	649.40	684.15	686.15	2.00		
W-832-11	-APR-06		30.35	23-Jan-06	668.30	696.65	698.65	2.00		
W-832-12	-APR-06		24.5	23-Jan-06	696.97	721.47	721.47	0.00	CB	
W-832-13	-APR-06		21.2	23-Jan-06	701.46	722.66	722.66	0.00	CB	

Attachment B

Equipment Checklist

Equipment Checklist

____ Two-way radio

____ Water-level indicator (with extra batteries)

____ Indicator reference bar

____ De-ionized water

____ Squirt bottle

____ Disposable gloves

____ Tool kit

____ Snake chaps (if necessary)

____ Appropriate maps

____ Water-Level Measurement Field Sheet

____ Paper towels

____ Pencils, pens

____ Detergent soap

____ Bucket

LLNL Environmental Restoration Division (ERD)
Standard Operating Procedure (SOP)

ERD SOP 3.2: Pressure Transducer Field Calibration—Revision: 3

AUTHOR(S):
Z. Demir and B. Clark

ENVIRONMENTAL RESTORATION DIVISION
CONTROLLED COPY
_____
THIS IS A RED STAMP
ERD

APPROVALS: **Date**

Albert J Lamarre 3/21/03
Division Leader

3/20/03
Environmental Chemistry and Biology Group Leader

CONCURRENCE: **Date**

Rebecca Goodrich 3/20/03
QA Implementation Coordinator

1.0 PURPOSE

The purpose of this SOP is to ensure accurate and consistent water-level measurements using pressure transducers.

2.0 APPLICABILITY

This procedure is applicable to field personnel who perform pressure transducer calibrations.

3.0 REFERENCES

3.1 Enviro-Labs, Inc., Operator's Manual, Data Logger DL-120-MCP.

3.2 *In Situ*, Inc. (1984), Owner's Manual: Hydrologic Analysis System, Model SE200.

3.3 *In Situ*, Inc. (1992), Operator's Manual, Data Logger SENTINEL LTM-3000.

3.4 *In Situ*, Inc. (1997), Operator's Manual, Pressure Transducer PXD-461.

3.5 *In Situ*, Inc. (1998), Operator's Manual, Pressure Transducer PXD-261.

3.6 *In Situ*, Inc. (1999), Operator's Manual, Data Logger HERMIT 3000.

3.7 *In Situ*, Inc. (1999), Operator's Manual, Data Logger TROLL SP4000.

3.8 *In Situ*, Inc. (2000), Operator's Manual, Data Logger MiniTROLL SSP-100.

3.9 *In Situ*, Inc. (2000), User's Guide, Data Logger Software Win-Situ 2000.

3.10 Instrument Northwest, Inc. (1992), Instruction Manual, Data Logger Aquistar DL-1A.

3.11 Instrument Northwest, Inc. (1997), Instruction Manual, Data Logger Aquistar DL-2.

3.12 Instrument Northwest, Inc. (1997), Instruction Manual, Submersible Pressure Transmitter, PS9800.

3.13 Instrument Northwest, Inc. (1997), Instruction Manual, Submersible Pressure/Temperature Transmitter, PS9805.

3.14 Instrument Northwest, Inc. (1997), Instruction Manual, Barometric/Vacuum Pressure Transmitter, BV9000.

4.0 DEFINITIONS

See SOP Glossary.

5.0 RESPONSIBILITIES

5.1 Division Leader

The Division Leader's responsibility is to ensure that all activities performed by ERD at the Livermore Site and Site 300 are performed safely and comply with all pertinent regulations and procedures, and provide the necessary equipment and resources to accomplish the tasks described in this procedure.

5.2 Hydrogeology Group Leader (HGL)

The HGL is responsible for ensuring that proper procedures are implemented for field activities (i.e., drilling, borehole logging and sampling, monitor well installations and development) and to oversee the disposal of investigation derived wastes.

5.3 Subproject Leader (SL)

The SL is responsible for the overall investigation, planning, and assessment and remediation within a study or treatment facility area.

5.4 Field Personnel

Field personnel are responsible for the proper calibration and documentation of the pressure transducers according to this procedure.

6.0 PROCEDURES

6.1 Office Preparation

6.1.1 Coordinate schedules/actions with SL, as appropriate.

6.1.2 Review the operator's manual provided with the electronic data logger, if appropriate.

6.1.3 Check to be sure the electronic data logger is fully charged and that the logger and pressure transducer are operating properly. Test the electronic data logger and transducer using a container of water (e.g., sink or bucket of water). Always bring additional transducers in case of malfunctions.

6.1.4 Enter record of calibration into the Hydraulic Testing Logbook.

6.1.5 Review appropriate sections of the Site Safety Plan.

6.2 Field Preparation

6.2.1 Locate the monitor wells where the pressure transducers will be calibrated and identify the appropriate decontamination areas.

6.2.2 Assemble appropriate testing equipment.

6.2.3 Decontaminate the transducer and cable as specified in SOP 4.5, "General Equipment Decontamination."

6.2.4 Measure the initial water level for the calibration monitor well and record on Hydraulic Test Field Sheet (See SOP 3.3, "Hydraulic Testing [Slug/Bail]," Attachment C).

6.2.5 Before beginning the calibration, record and enter information into the electronic data logger. The type of information may vary depending on the model used. Consult the operator's manual for the proper data entry sequence to be used. For example, the following data is entered into the Enviro-Labs Model DL-120-MCP Data Logger:

1. Baud rate.
2. Station ID.
3. Date (YY/MM/DD).
4. Time (HH:MM:SS).
5. Scale factors for each channel.

6.3 Operation

Several precautions should be taken when using submersible pressure transducers. Silicon diaphragm transducers are fragile and should always be handled carefully to minimize shock. The transducer cable is vented so that temperature and barometric pressure will not cause variations in the transducer reading. If the vent port is plugged, inaccurate readings will result. If water enters the vent and flows downward into the transducer, the transducer may be damaged. The transducer cable is susceptible to both physical damage (e.g., abrasion on sharp well casings) and chemical degradation from

solvents. Damaged cable can cause damage to transducers during submergence, and inaccurate readings may result.

6.3.1 Cover sharp edges of the well casing with duct tape to protect the transducer cables.

6.3.2 Connect the transducer cable to the recording device (e.g., Enviro-Labs Data Logger, *In Situ* Hermit, Campbell Micrologger 21X, and other recording devices).

6.3.3 Slowly lower the transducer and cable down the well to a depth below the target drawdown estimated for the test but at least 1 ft from the bottom of the well. Be sure this depth of submergence is within the design range stamped on the transducer. Mark this depth on the cable using a piece of duct tape. A temporary standpipe may be filled and used for transducer calibration if wellhead access is not available.

6.3.4 Partially withdraw the transducer and cable, and accurately measure a distance greater than 3 ft. Mark this depth on the cable using a piece of duct tape. Temporarily tape the transducer cable to a stationary object to keep the transducer at a constant depth.

6.3.5 Display the current water level on the recording device according to the manufacturer's instructions. Record the current water level on the Hydraulic Test Data Sheet.

6.3.6 Lower the transducer the distance measured in step 6.3.4. Record the new water level displayed on the recording device.

6.3.7 Calculate a transducer scale factor correction (SFC) as follows:

SFC = (L/W), where

L= distance that the transducer is lowered during calibration, measured in step 6.3.3, and

W= difference between the two water level measurements on the recording device.

6.3.8 Record the transducer scale factor correction on the Hydraulic Test Field Sheet (SOP 3.3, Attachment C). If the scale factor correction is considerably more than 0.01, then repeat steps 6.3.5 through 6.3.7. If the recalculated scale factor corrections are not similar to each other after three attempts, replace the transducer. Multiply all changes in water level measured by the calibrated transducer by the scale factor correction to obtain actual water level changes.

6.3.9 If transducers are installed for a period exceeding one day, periodically take water level measurements by hand to verify the function and accuracy of each pressure transducer. Transducers installed for one week should be verified daily; installations left for longer periods can be hand-verified less frequently, depending on the required accuracy of the data.

6.4 Post Field Operation

6.4.1 Continue the water-level measurement task (e.g., slug test or pumping test).

6.4.2 Decontaminate the transducer and cable per SOP 4.5 at the completion of the task. Do not use solvents to decontaminate the transducer cable.

6.4.3 Complete shutdown of the electronic data logger:

1. Stop the logging sequence.
2. Save memory and disconnect the battery at the end of the testing activities.

6.4.4 Replace testing equipment in storage containers.

6.5 Office Post Operation

6.5.1 Complete Hydraulic Test Field Sheet (SOP 3.3, Attachment C) and Hydraulic Test Logbook entries. Deliver copies of documentation to the Data Management Team, HGL, and SL, as appropriate.

6.5.2 Arrange for the repair of any transducers that were damaged or could not be calibrated.

7.0 QA RECORDS

7.1 Hydraulic Test Field Sheet

7.2 Logbooks

8.0 ATTACHMENTS

Not applicable.

LLNL Environmental Restoration Division (ERD)
Standard Operating Procedure (SOP)

ERD SOP 3.3: Hydraulic Testing (Slug/Bail)—Revision: 3

AUTHOR(S):
Z. Demir and B. Clark

ENVIRONMENTAL RESTORATION DIVISION
CONTROLLED COPY
_____
THIS IS A RED STAMP
ERD

APPROVALS: **Date**

Albert L Lamarre 3/21/03
Division Leader

3/20/03
Environmental Chemistry and Biology Group Leader

CONCURRENCE: **Date**

Rebecca Goodrich 3/20/03
QA Implementation Coordinator

1.0 PURPOSE

The purpose of this SOP is to determine saturated hydraulic conductivity of the sediments near the well screen under *in situ* conditions without pumping the well.

2.0 APPLICABILITY

This procedure is applicable for slug/bail hydraulic testing. Slug/bail tests are only recommended for wells that produce less than 1 gallon per minute.

3.0 REFERENCES

3.1 Bower, H. (1978), *Groundwater Hydrology*, McGraw-Hill, New York, N.Y.

3.2 Bower, H. and R. C. Rice (1980), "A Slug Test for Determining the Hydraulic Properties of Tight Formations," *Water Resources Research* **16** (1), pp. 233–238.

3.3 Cooper, Jr., H. H., J. D. Bredehoeft, and S. S. Papadopoulos (1967), "Response of a Finite-Diameter Well to an Instantaneous Charge of Water," *Water Resources Research* **13** (1).

3.4 DOI (n.d.), *Ground Water Manual*, U.S. Department of the Interior Publication.

3.5 Earlougher, R. C. (1977), *Advances in Well Test Analysis*, Society of Petroleum Engineers of AIME.

3.6 Ferris, J. G. and D. B. Knowles (1954), "The Slug Test for Estimating Transmissivity," *U.S. Geological Survey Groundwater Note 26*.

3.7 Freeze, R. A. and J. A. Cherry (1979), *Groundwater*, Prentice-Hall, Inc., Englewood Cliffs, New Jersey.

3.8 Hvorslev, M. J. (1951), *Time Lag and Soil Permeability in Ground-Water Observations*, U.S. Army Corps of Engineers, Bull. 36.

3.9 Johnson Division, UOP, Inc. (1966), *Groundwater and Wells.*

3.10 Lohman, S. W. (1972), "Ground-Water Hydraulics," *U.S. Geological Survey Paper 708*.

3.11 Neuman, S. P. (1972), "Theory of Flow in Unconfined Aquifers Considering Delayed Response of the Water Table," *Water Resources Research* **8** (4), p. 1031.

3.12 Papadopoulos, S. S., J. D. Bredehoeft, and H. H. Cooper, Jr. (1973), "On the Analysis of Slug Test Data," *Water Resources Research* **8** (4).

3.13 Todd, D. K. (1980), *Groundwater Hydrology*, 2d ed., John Wiley & Sons, New York, N.Y.

3.14 U.S. Department of the Interior (n.d.), *Ground Water Manual*, Washington, D.C.

3.15 Walton, W. C. (1970), *Groundwater Resource Evaluation*, McGraw-Hill, New York, N.Y.

4.0 DEFINITIONS

See SOP Glossary**.**

5.0 RESPONSIBILITIES

5.1 Division Leader

The Division Leader's responsibility is to ensure that all activities performed by ERD at the Livermore Site and Site 300 are performed safely and comply with all pertinent regulations and procedures, and provide the necessary equipment and resources to accomplish the tasks described in this procedure.

5.2 Hydrogeology Group Leader (HGL)

The HGL is responsible for ensuring that proper procedures are implemented for field activities (i.e., drilling, borehole logging and sampling, monitor well installations and development) and to oversee the disposal of investigation derived wastes.

5.3 Subproject Leader (SL)

The SL is responsible for the overall investigation, planning, and assessment and remediation within a study or treatment facility area.

5.4 Hydrogeologist (HG)

The HG is responsible for preparing the Hydraulic Test Plan (Attachment B) and assisting the field personnel in conducting his/her responsibilities.

5.5 Field Personnel

Field personnel are responsible for conducting and documenting hydraulic testing according to this procedure.

6.0 PROCEDURES

6.1 Discussion

6.1.1 During the slug test, a slug of known volume is lowered into the well displacing that same volume of water. Over time, typically a few hours, the water level returns to static. During the test, water-level measurements are recorded using a pressure transducer and a data logger. These measurements, plotted against time, produce a curve which is then compared to type-curves to determine values of T and K. For a bail test, the slug is removed from the well, and water-level measurements are collected similar to the slug test.

6.1.2 The advantages and limitations of using slug/bail tests to estimate hydraulic properties include: 1) estimates can be made *in situ*, and errors incurred in laboratory testing of disturbed samples are avoided; 2) tests can be quickly performed at a relatively low cost, because a pumping well and observation wells are not required; 3) the hydraulic conductivity of small volumes within an aquifer can be estimated; 4) no treatment, collection, or disposal of pumped water is necessary; 5) only the hydraulic properties of the material very near the well are estimated, and they may not be representative of the average hydraulic properties of the area; 6) certain assumptions are made in the analysis, and if they are inconsistent with the geologic conditions at the site, the slug/bail test results may be invalid; 7) the storage coefficient *(S)* usually cannot be determined; and 8) sufficient data for analysis may not be collected if the hydraulic conductivity of the screened material is relatively high.

6.2 Office Preparation

6.2.1 Review the Hydraulic Testing Plan (Attachment B) with the SL.

6.2.2 Review the Daily Operations Guide, associated SOPs, and appropriate sections of the Site Safety Plan. Information on depth to water, depth of well, screened interval, casing size, and pump size and type is obtained from the Data Management Team (DMT) for established wells, or from the drilling coordinator for new wells.

6.2.3 Coordinate schedules/actions with SL or project HG, as appropriate.

6.2.4 Review the operator's manual provided with the electronic data logger, if appropriate.

6.2.5 Check out and ensure the proper operation of all field equipment. Ensure that the electronic data logger is fully charged, if appropriate. Test the electronic data logger and pressure transducers using a container of water (e.g., sink or bucket of water). Always bring additional transducers in case of malfunctions.

6.2.6 Obtain the Hydraulic Test Logbook and a sufficient number of field forms to complete the field assignment.

6.3 Field Preparation

6.3.1 If the well has a Well Wizard bladder pump or a similar instrument installed, it must be removed at least one day before the test is conducted to allow the water level to return to static.

6.3.2 Locate monitor wells to be tested and appropriate decontamination areas.

6.3.3 Assemble appropriate testing equipment listed in the Equipment Checklist (Attachment A).

6.3.4 To avoid cross-contamination, bailers or measuring devices should be cleaned before and after each test. If water is added to the monitoring well, it should be from an uncontaminated source and be transported in a clean container. Decontaminate the transducer and cable as specified in SOP 4.5, "General Equipment Decontamination."

6.3.5 Calibrate all gauges and transducers before conducting slug test according to SOP 3.2, "Pressure Transducer Calibration." Document instrument calibration in the Hydraulic Test Logbook.

6.3.6 Measure initial water level in monitor well or piezometer according to SOP 3.1, "Water Level Measurement," and record on Hydraulic Test Field Sheet (Attachment C).

6.3.7 Before beginning the slug test, enter and record information in the electronic data logger. The type of information will vary depending on the model used. When using different models, consult the operator's manual for the proper data entry sequence to be used. For example, the following data is entered into the Enviro-Labs Model DL-120-MCP Data Logger:

1. Baud rate.
2. Station ID.
3. Date (YY/MM/DD).
4. Time (HH:MM:SS).
5. Scale factors for each channel.
6. Logging sequence.

6.3.8 Test wells from least contaminated to most contaminated, if possible.

6.4 Operation

The following general procedures will be used to collect and report slug/bail test data. The procedures required for a particular slug/bail test may vary slightly from those described, depending on site conditions. Modifications to the test procedures should be documented on the Hydraulic Test Field Sheet (Attachment C) and Slug Test Schematic (Attachment D).

6.4.1 When the slug/bail test is performed using an electronic data logger and pressure transducer, most of the data will be electronically stored internally or on computer diskettes or tape. The information will be transferred directly to the main computer and analyzed. A Hydraulic Test Field Sheet (Attachment B) with supplemental information and a computer printout of the data should be maintained with the DMT as documentation.

6.4.2 The time required to complete a slug test is a function of the volume of the slug, the transmissivity of the formation, and the well casing size. The slug volume should be large enough that a sufficient number of water level measurements can be made before the water level returns to equilibrium conditions. Test length may range from less than a minute to several hours.

6.4.3 Slug tests must be conducted on relatively undisturbed wells. If a test is conducted on a well that has recently been pumped, measure the water level within 0.1 ft of the static water level before sampling. At least one week should elapse between well development and the slug test.

6.4.4 The slug will have to remain completely submerged throughout the test, so the height of the static water column must be greater than the length of the slug.

6.4.5 A pressure transducer must hang below the bottom of the submerged slug so a portion of the water column must be available for the transducer.

6.4.6 The slug diameter must be small enough so that it will not disturb the transducer cable when the slug is lowered.

6.4.7 Although a larger slug is desired when possible, using a large slug that is unwieldy can result in unnecessary difficulties and/or damage to the pressure transducer.

6.4.8 Well diameter, screened interval, total depth, and most recent, depth-to-water information should be used to determine the appropriate slug size. A slug of appropriate size may need to be constructed.

Note: In general, slug size will not be restricted by the height of the water column, but double check to prevent having to redo a test.

6.4.9 The Hydraulic Test Field Sheet (Attachment B) is used to record observations and supplemental information. Complete the form as follows:

1. Site Location. Brief description of the general location of the well.
2. Well ID. Unique number assigned to each well where measurements are taken.
3. Date. The date of the test.
4. Make of logger used (Campbell or Hermit) and the make and serial number of the transducer used.

5. Slug Dimensions or Volume of Water. Dimensions of the slug or displacement object in tenths of feet.
6. Personnel. Initials of personnel performing field measurements or collecting samples.
7. Test Type. The slug device is either injected (slug) or withdrawn (bail) from the monitor well. Note the appropriate test type.
8. Comments. Appropriate observations or information for which no other blanks are provided.
9. Elapsed Time (min:sec). Cumulative time readings from beginning of test to end of test in minutes and seconds.
10. Depth to Water (ft). Depth of water recorded in tenths and hundredths of feet.

6.5 Procedure for Conducting a Slug/Bail Test.

6.5.1 Measure the static water level in the well, and record in the Hydraulic Test Logbook and on the Hydraulic Test Field Sheet (Attachment C). The point and time of measurement should be noted on the Hydraulic Test Field Sheet (Attachment C) and in the wellhead logbook.

6.5.2 Cover sharp edges of the well casing with duct tape to protect the transducer cables.

6.5.3 Connect the transducer cable to the electronic data logger.

6.5.4 Slowly lower the transducer and cable down the well to a depth below the slug submergence for the test, but at least 1 ft from the bottom of the well. Be sure this depth is within the design range stamped on the transducer. To keep the transducer at a constant depth, securely tape the transducer cable to a stationary object.

6.5.5 Firmly tie one end of the rope to the slug. From the top of the slug, measure a length slightly greater than the depth-to-water, and mark the rope with a duct tape tag. Then, measure the length needed at the duct tape tag to hang the slug a few inches above the static water level, and mark this with a second duct tape tag. Account for any possible stretching of the rope.

6.5.6 Tie the other end of the rope to an anchor so that the slug can be lowered within a few inches of the water level.

Note: Account for “stretch” of the rope by being a little conservative in estimating where the slug will hang.

6.5.7 Slowly lower the slug into the well and let it hang a few inches above the water as mentioned in Step 6. Have the data logger display the transducer readout while lowering the transducer. If the slug does contact the water, an immediate change will be seen. On the logger readout, use the lower duct tape tag as a reference point.

Note: Touching the water with the slug is not always disastrous. If the slug does touch the water, pull it back up a few inches and see if the water level returns to static in the next few minutes or so.

6.5.8 Once the slug is hung, set the data logger to log according to the hydraulic Test Plan (Attachment B).

6.5.9 To begin the test, turn the logger on 5 seconds prior to lowering the slug. It is preferable to begin logging on an even minute and to lower the slug 5 seconds after (e.g., 10:00:00 "logging on," 10:00:05 "slug lowered"). Quickly lower the slug to the second duct tape mark (see Step 5) and tie off the rope. Do not splash the water.

Note: Sometimes, it is possible to tie the rope to two different anchors so that when the rope is untied from the first position (slug just above the water), it can be dropped and the second anchor will hold it at the desired depth (see Attachment D "Before Start of Slug Test" and "After Start of Slug Test").

6.5.10 Another method is to introduce a solid cylinder of known volume to displace and raise the water level, allow the water level to restabilize, and remove the cylinder. It is important to remove or add the volumes as quickly as possible because the analysis assumes that an instantaneous change in pressure is created in the well. It is important to ensure that the slug is completely submerged if introduced.

6.5.11 Note on the logger readout, the initial rise in the water level and see if it corresponds with the calculated rise. Since the water level changes fairly rapidly at first, it may be necessary to scroll back through the logged data to determine the first (highest) point.

Note: This initial rise calculation often does not exactly correspond with the logged initial rise, but it should be relatively close.

6.5.12 At some point during the test, take at least one depth-to-water measurement with the water level probe to ensure the transducer is reading correctly.

6.5.13 When the water level has returned to static level, the bail test is then performed.

6.5.14 Reset logging mode on an even minute, then pull out the slug as quickly as possible. Note the decrease in water level.

6.5.15 At each reading, measure depth to water (to the nearest 0.01 ft) and record time when pressure change is at time zero. The number of depth-time measurements necessary to complete the test are variable. Frequent measurements should be made so that the change in water level between two consecutive measurements is <5% of the initial change. It is critical to make as many measurements as possible in the early part of the test.

6.5.16 Continue measuring and recording depth-time measurements until the water level returns to within 10% of equilibrium conditions.

6.5.17 The test is complete when the water level has returned to static level, and the log equipment can be broken down.

6.6 Post Field Operation

6.6.1 Decontaminate or dispose of equipment and rope according to SOP 4.5.

6.6.2 If using an electronic data logger:

1. Stop logging sequence.

2. Save memory.
3. Disconnect battery at the end of the testing activities.

6.6.3 Replace testing equipment in storage containers.

6.7 Office Post Operation

6.7.1 Inventory sampling equipment and supplies. Repair or replace all broken or damaged equipment.

6.7.2 Replace expendable items.

6.7.3 Return equipment to storage area and report incidents of malfunctions or damage.

6.7.4 Review Hydraulic Test Logbook and field forms for completeness.

6.7.5 Deliver original forms, logger data, and logbooks to the project HG. Deliver copies of documentation to the DMT, HGL, or SL, as appropriate.

6.7.6 Interpret slug/bail test field results with project HG, HGL, or SL. Analyze slug/bail test using appropriate software packages or graphical solutions.

6.7.7 Send data logger or pressure transducers to factory for recalibration, if needed.

7.0 QA RECORDS

7.1 Logbooks

7.2 Hydraulic Test Field Sheet

8.0 ATTACHMENTS

Attachment A—Equipment Checklist

Attachment B—Hydraulic Test Plan

Attachment C—Hydraulic Test Field Sheet

Attachment D—Slug Test Schematic

Attachment A

Equipment Checklist

Equipment Checklist

____ 12-volt battery

____ Appropriate references and calculator

____ Aquifer test sheets

____ Calculator, clip board

____ Duct tape

____ Electric water-level indicator

____ Electronic data logger (if transducer method is used)

____ Interface probe

____ Rope (should very little “stretch”)

____ Semilog graph paper (if required)

____ Slug (steam cleaned prior to use)

____ Steel tape (subdivided into tenths of feet)

____ Stopwatch or watch with second hand

____ Tape measure (subdivided into tenths and hundredths of feet) or other water-level measuring device

____ Watch with a second hand

____ Water-pressure transducer (if test is anticipated to last overnight, a barometric pressure transducer should also be used)

____ Waterproof ink pen and logbook

Attachment B

Hydraulic Test Plan

HYDRAULIC TEST PLAN

GENERAL INFORMATION		By:
Location:	Livermore Site ❑ Site 300 ❑ Area:	
Test Type: (1-hour drawdown, longterm, step flow or drawdown, slug, facility startup)		
Test Well Name(s):		
Expected Start Date:		
Duration of Test:		
Treatment Unit or Method:		
Comments:		

TEST OBJECTIVE(S)	By:

TEST DESCRIPTION AND SPECIAL INSTRUCTIONS	By:

GROUND WATER CHEMISTRY IN TEST WELL(S)	By:

EXTRACTION WELL(S) DESCRIPTION			By:
Well(s)			
Screen Interval (ft-bgs/bmp)			
Pump Intake (ft-bgs/bmp)			
Depth to static water level (ft-bmp)			
Available Drawdown (ft)			
Extraction Flowrate (gpm)			
(only for step flowrate tests) Steps <Flowrate (gpm) - Duration(hrs)> 1 2 3 4 5			
Estimated Volume to be Extracted (gal)			
Pump Type and Size			
Extraction Flowrate Measurement			
Comments:			

Notes: **bgs**- below ground surface elevation, **bmp**- below measurement point elevation

SAMPLING PROTOCOL		By:
Sample Date/Time – **I**nfluent/**E**ffluent	Sample form Well(s)	Analysis (i.e. E601)
Initial >		
Final >		
Comments:		

WATER LEVEL MEASUREMENT SPECIFICATIONS	By:
Extraction Well:	
Observation Wells:	Shown on attached figure: Yes ❑ No ❑
Wells instrumented with transducers:	
Wells to be hand-measured:	
Collection of water levels in instrumented wells using data loggers and hand measured wells:	
Log Barometric Pressure Readings	Yes ❑ No ❑
PRIOR TO PUMPING: Log background water levels every 15 minutes for at least 24 hours prior to test.	
DURING PUMPING: Log water levels during test as indicated below: TEST WELL: Logarithmically increasing frequency ❑ or Linear at 15 minute intervals ❑ OBSERVATION WELLS: Logarithmically increasing frequency ❑ or Linear at 15 minute intervals ❑ HAND MEASURED WELLS: Linear at 60 minute intervals ❑	
DURING RECOVERY: Log water levels after pump shut-in as indicated below for at least 24 hours: TEST WELL: Logarithmically increasing frequency ❑ or Linear at 15 minute intervals ❑ OBSERVATION WELLS: Logarithmically increasing frequency ❑ or Linear at 15 minute intervals ❑ HAND MEASURED WELLS: Linear at 60 minute intervals ❑	
NEARBY EXTRACTION WELLS: Inform technicians of nearby extraction wells/facility to maintain constant flow rates in all extraction wells during the test. Inform them of potential water level changes in wells due to hydraulic testing.	
Comments:	

Note:
Verify availability of data loggers, transducers, and cable with Field Coordinator (Billy Clark).
Logging frequencies are subject to change as directed by LLNL Hydrogeologist or Field Coordinator.

GROUND WATER DISCHARGE	By:
Estimated Volume of ground water to be discharged (gals):	
Type of water storage tank and capacity: *(NOTE: see estimated volume to be extracted above to determine if adequate storage is available)*	
Discharge Location:	
Type of Discharge Permit Required ❑ NPDES: ❑ City of Livermore: ❑ None / Other (explain):	
Treatment of ground water required to comply with Discharge Permit:	Yes ❑ No ❑
Type of treatment, if necessary:	
Estimated Chemistry of ground water to be discharged:	
Comments:	

Attachment C

Hydraulic Test Field Sheet

HYDRAULIC TEST FIELD SHEET

Site	❑ Livermore Site ❑ Site 300	Page ___ of ___	By:
Test Well		Treatment Unit	
Test Type		Data Logger(s)	
Comments			
Totalizer: Start: (gals)	End:	> Total Gallons Extracted:	

Data Logging Start Date: / / Memory Loc.: Data Logging End Date: / / Memory Loc.:					Hydraulic Test Start Date: / / Hydraulic Test End Date: / /				
channel									
well ID									
xducer (psi)									
date/time									

Attachment D

Slug Test Schematic

WEISS ASSOCIATES

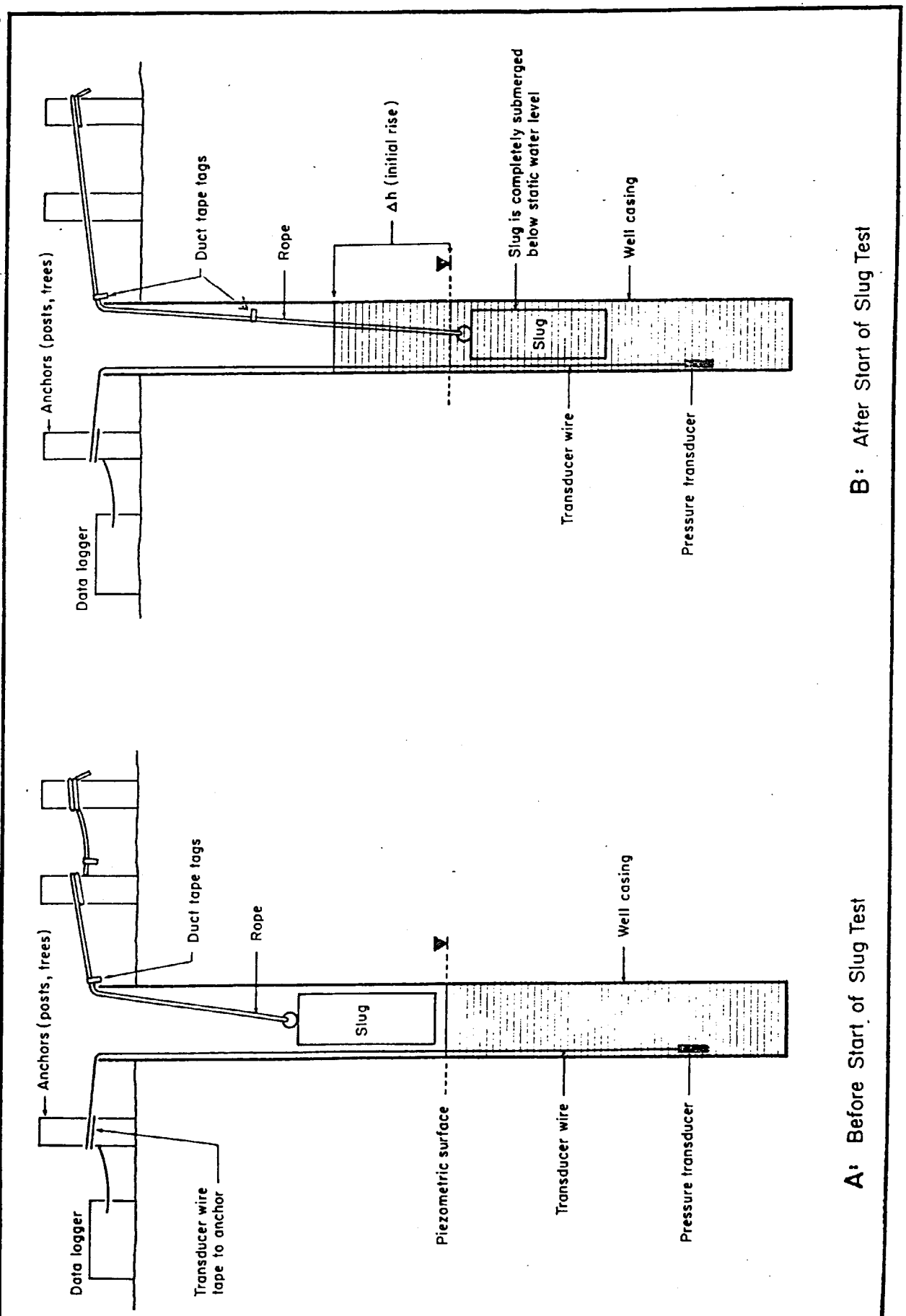

Figure 5-1 Slug Test

LLNL Environmental Restoration Division (ERD)
Standard Operating Procedure (SOP)

ERD SOP 3.4: Hydraulic Testing (Pumping)—Revision: 3

AUTHOR(S):
Z. Demir and B. Clark

ENVIRONMENTAL RESTORATION DIVISION
CONTROLLED COPY
_____
THIS IS A RED STAMP
ERD

APPROVALS: **Date**

Albert L Lamarre 3/21/03
Division Leader

_____ 3/20/03
Environmental Chemistry and Biology Group Leader

CONCURRENCE: **Date**

Rebecca Goodrich 3/20/03
QA Implementation Coordinator

1.0 PURPOSE

The purpose of this SOP is to determine the hydraulic properties of water-bearing materials by controlled pumping of a well for 1–8 hours (short term) and up to 24 hours or longer (long term), and to evaluate the degree to which relatively permeable sediments are hydraulically connected vertically and horizontally.

2.0 APPLICABILITY

This procedure is applicable to hydraulic testing by pumping. Pumping tests provide results that are more representative of average aquifer characteristics than those predicted by slug tests. Pumping tests require a greater degree of activity and expense and are not always justified for all levels of investigation. For example, slug/bail tests may be acceptable at the reconnaissance level, whereas pumping tests are usually performed as part of a feasibility study in support of designs for aquifer restoration. The aquifer characteristics that can be obtained from pumping tests include hydraulic conductivity (K), transmissivity (T), specific yield (SY) for unconfined

aquifers, and storage coefficient (S) for confined aquifers. Single well pumping tests of short duration, which monitor the water level in the pumping well only, can be used to determine transmissivity and hydraulic conductivity but not specific yield or storage coefficient. The test data are analyzed using graphical solutions and/or appropriate computer software packages.

3.0 REFERENCES

3.1 Boulton, N. S. (1954), "The Drawdown of the Water-Table under Non-Steady Conditions Near a Pumped Well in an Unconfined Formation," *Proc. Inst. Civil Eng.* **3**, paper 5979, p. 564.

3.2 Boulton, N. S. (1954), "Analysis of Data from Non-Equilibrium Pumping Tests Allowing for Delayed Yield from Storage," *Proc. Inst. Civil Eng.,* **26**, paper 6693, pp. 469−482.

3.3 Bower, H. (1978), *Groundwater Hydrology*, McGraw-Hill, New York, N. Y.

3.4 Bower, H. and R. C. Rice, (1976), "A Slug Test for Determining Hydraulic Conductivity of Unconfined Aquifers with Completely or Partially Penetrating Wells," *Water Resour. Res*, **12**(3).

3.5 Bredehoeft, J. D. and S. S. Papadopoulos (1980), "A Method for Determining the Hydraulic Properties of Tight Formations," *Water Resour. Res.* **16** (1), pp. 233−238.

3.6 Cooper, Jr., H. H., J. D. Bredehoeft, and S. S. Papadopoulos (1967), "Response of a Finite-Diameter Well to an Instantaneous Charge of Water," *Water Resour. Res.*, **13**(1).

3.7 Cooper, Jr., H. H. and C. E. Jacob (1946), "A Generalized Graphical Method for Evaluating Formation Constants and Summarizing Well-Field History," *AGU Trans.*, **27**(4), pp. 526−534.

3.8 Earlougher, R. C. (1977), *Advances in Well Test Analysis*, Society of Petroleum Engineers of AIME.

3.9 Ferris, J. G. and D. B. Knowles (1954), "The Slug Test for Estimating Transmissivity," *USGS Groundwater Note 26*.

3.10 Freeze, R. A. and J. A. Cherry (1979), *Groundwater*, Prentice-Hall, Englewood Cliffs, N.J.

4.0 DEFINITIONS

See SOP Glossary.

5.0 RESPONSIBILITIES

5.1 Division Leader

The Division Leader's responsibility is to ensure that all activities performed by ERD at the Livermore Site and Site 300 are performed safely and comply with all pertinent regulations and procedures, and provide the necessary equipment and resources to accomplish the tasks described in this procedure.

5.2 Hydrogeology Group Leader (HGL)

The HGL is responsible for ensuring that proper procedures are implemented for field activities (i.e., drilling, borehole logging and sampling, monitor well installations and development) and to oversee the disposal of investigation derived wastes.

5.4.1 Subproject Leader (SL)

The SL is responsible for the overall investigation, planning, and assessment and remediation within a study or treatment facility area.

5.4.2 Hydrogeologist (HG)

The HG is responsible for preparing the Hydraulic Test Plan (Attachment B) and assisting the field personnel in conducting his/her responsibilities.

5.3 Field Personnel

Field personnel are responsible for conducting and documenting hydraulic testing according to this procedure.

6.0 PROCEDURES

6.1 Discussion

Wells are selected for extended pumping based on location relative to contaminant plume(s), expected flow rate, and proximity to observation wells. Long-term pumping tests may last from 4 days to 1 week, typically with 1 day of background monitoring, 1 day or more of actual pumping, and 1 day of recovery observations. In all phases of the long-term test, barometric pressure is monitored continuously by a barometric pressure transducer. The duration of a test is determined by the test objectives and the aquifer properties. A test duration of one to several days is desirable, followed by a similar period of monitoring water-level recovery. Partially confined aquifers and partially penetrating wells may have a shorter test duration. A knowledge of the local hydrogeology and a clear understanding of the overall objectives of the test are necessary to determine the test duration. The effect of any hydrogeologic boundaries should also be considered. Pumping or recovery monitoring can be discontinued if the water levels become constant with time. During pumping, this may indicate that a hydrogeologic recharge boundary has been intercepted and that additional testing would not yield any more useful information.

If indicated on the Hydraulic Test Plan (Attachment B) provided by the task leader/study area leader, a step-drawdown test may be performed. The general data collection procedure for this test is the same for a constant-rate test, except drawdown data only need to be collected from the pumping well (if the step test is to be followed by a constant-rate drawdown test). For this reason, it is often possible to conduct a 2 to 3 h step-drawdown test on the pumping well, while instrumenting observation wells for the constant-rate test. If done, allow sufficient time for the aquifer to recover prior to starting the constant-rate test. The objectives of a step-drawdown test are to 1) determine the magnitude of non-Thesian well losses caused by friction within the well screen and the sand pack, or 2) determine the optimum pumping rate for a constant-rate test. A step test is also useful in evaluating the progress of well development. To perform a step-drawdown test, the well should be pumped at approximately three different rates (for example, 5, 10, and 25 gallons per minute). Generally, 1 h for each step is sufficient. It is not necessary for drawdown to stabilize before proceeding to the next step.

6.2 Office Preparation

6.2.1 Review the Hydraulic Test Plan (Attachment B) with the project HG.

6.2.2 Review the Daily Operations Guide, associated SOPs, and appropriate sections of the Site Safety Plan. Information on depth to water, depth of well, screened interval, casing size, and pump size and type is obtained from the Data Management Team (DMT) for established wells, or from the drilling coordinator for new wells.

6.2.3 Coordinate schedules/actions with the SL or project HG regarding the availability of necessary pumping test equipment and the SC to coordinate hydraulic testing with the quarterly ground water sampling activities.

6.2.4 Obtain Hydraulic Test Plan (Attachment B) from the project HG or SL. This plan should include specific test details such as which wells are to be monitored, pumping rates, test duration, and other site- and task-specific variables.

6.2.5 Review the operator's manual provided with the electronic data loggers, if appropriate.

6.2.6 Obtain equipment listed in the Equipment Checklist (Attachment A) and verify it is properly operating. Make sure the electronic data logger is fully charged, if appropriate. Always bring additional transducers in case of malfunctions.

6.2.7 Obtain the Hydraulic Test Logbook. Assemble a sufficient number of field forms to complete the field assignment to include:

1. A site map of the area to be monitored with all observation wells highlighted.
2. Hydraulic Test Field Sheet (Attachment C) for each well to be monitored.
3. Schedule of water samples to be taken, and water sampling and Chain-of-Custody forms (if appropriate).
4. A list of the observation wells and their construction details, listed in the order in which water levels are to be measured.

6.2.7 Initiate steps to collect, treat, and dispose of purged water according to the appropriate version of SOP 4.7, "Treatment and Disposal of Well Development and Well Purge Fluids."

6.3 Field Preparation

6.3.1 Check equipment for proper function as follows:

1. Pumps should be submersible or turbine type. The pumping well should be properly developed at least one week before testing. Verify that the existing pump is sufficient for the estimated flow rate.
2. Verify that an orifice, weir, flow meter, container, or other type of water measuring device is available to accurately measure and monitor the discharge from the pumping well.
3. Verify that sufficient discharge hose or pipe is present to transport the discharge water from the pumping well to conform with discharge requirements.
4. Verify that an orifice valve manifold or gate valve is located on the discharge pipe to control the pumping rate.
5. Verify that a sampling port is near the wellhead for water quality sampling.

6.3.2 Calibrate all gauges, transducers, flow meters, etc., before conducting pumping tests (SOP 3.2, "Pressure Transducer Calibration"). Document instrument calibration in the Hydraulic Test Logbook and file copies of the documentation with the test data records. The calibration records should consist of laboratory measurements, and if necessary, any on-site zero adjustment or calibration. Where possible, check all flow measurement devices on site using a container of measured volume and a stopwatch.

6.3.3 Extend transducer wires to appropriate wells. Wires should be secured with duct tape where they cross walkways and other paved surfaces. To prevent disturbances, wires should be marked with flagging tape if strung across unpaved areas.

6.3.4 Decontaminate each transducer and cable as specified in the sampling plan and in SOP 4.5, "General Equipment Decontamination."

6.3.5 If the pumping duration is expected to exceed 2 h, water levels and barometric pressure at the test site should be monitored for at least one day prior to pumping. This information allows the barometric efficiency of the aquifer to be estimated, and indicates if the aquifer is experiencing changes in head due to recharge, pumping in the nearby area, or diurnal variations. Barometric pressure is recorded during the test with an on-site barograph or barometric pressure transducer in order to correct water levels for any fluctuations that may occur due to changing barometric conditions. Pretest water-level trends are projected into the pumping phase of the test. These trends and barometric changes are used to adjust water levels measured during the test to be representative of the hydraulic response of the aquifer due to test well pumping.

6.3.6 Generally, 4–8 wells are instrumented with pressure transducers and about 10–15 additional wells are monitored with an electric water-level meter. Water levels in all wells within a 500- to 1,000-ft radius of the pumping wells are measured frequently during the test. For wells with transducers, water levels are measured every 15 min during the background phase, and on a logarithmically increasing frequency ranging from 1 second to 15 minutes during the pumping and recovery phases.

6.3.7 Water-level measurements in non-instrumented wells are measured two to four times during the background phase and every one to three hours during the pumping and recovery phases of the test.

6.3.8 Water levels should be measured as specified in SOP 3.1, "Water Level Measurement." To keep measurements equally spaced in time, water levels should be taken in the same order each sampling period. Simultaneous readings at wells are not necessary. It is very important that depth-to-water readings are measured accurately and recorded at the exact time. To complete the pumping test, pressure transducers and electronic data loggers can be used to reduce the required field personnel hours. See Hydraulic Test Field Sheet, Attachment C.

6.4 Operation

6.4.1 A pumping test monitors the water levels in the pumping well and observation wells as the pumping well discharges at a constant rate.

6.4.2 Record the following data on the Hydraulic Test Field Sheet (Attachment C) at the time the test is performed.

1. Site Location. Brief description of general site location.
2. Well ID. Unique number assigned to each well.
3. Date. The date when measurements are taken.
4. Distance from pumped well (ft). Distance to the observation well from the pumping well in feet and tenths of feet.
5. Personnel. Initials of personnel performing field measurements or collecting samples.
6. Static Water Level. Depth to water, in tenths and hundredths of feet, in each observation well before pumping.
7. Test Start Date. The date when pumping began.
8. Test Start Time. Time in hours:minutes:seconds at which pumping began using 24-h clock (e.g., 08:37:00 for 8:37 a.m.; 19:12:00 for 7:12 p.m.).
9. Test End Date. The date when pumping ends.
10. Test End Time. Time in hours:minutes:seconds at which pumping ended using 24-h clock (e.g., 08:37:00 for 8:37 a.m.; 19:12:00 for 7:12 p.m.).
11. Average Pumping Rate. Time-weighted average of all entries recorded in the Pumping Rate (gal/min) column.
12. Measurement Methods. Type and serial number of instrument used to measure depth to water (this may include steel tape, electric sounding probes, Stevens recorders, or pressure transducers).
13. Comments. Appropriate observations or information for which no spaces are specifically provided.
14. Time. Record the time of water-level or flow-rate measurement in hours, minutes, and seconds, using a 24-h clock.
15. Depth to Water. Depth to water, in tenths and hundredths of feet.
16. Pumping Rate. Flow rate of pumping well measured with an orifice, weir, flow meter, container, or other device.
17. Record time pump is stopped.
18. Time. Record the time of water-level or flow-rate recovery measurements in hours, minutes, and seconds, using a 24-h clock.
19. Depth to Water. Depth to water, in tenths and hundredths of feet.

6.5 Long-Term Pumping Test Procedure

6.5.1 Day 1

1. Power up data logger(s) and synchronize clock time.
2. Lower the transducers into their respective wells. Monitor the logger channel corresponding to the well to ensure the transducer is not lowered too far below the water. Attach a transducer wire to a nearby ballard/post to prevent slippage during the test.
3. Connect barometric pressure transducer to one of the data loggers.

4. Log data at 30-minute intervals.

   Note: Set the transducers for one logger and begin logging. To allow for more background data to be collected, lower the transducers for the next logger.

5. Take one round of hand-measured water levels in all wells, including wells with transducers ("complete" round). Note the date, time, depth-to-water, and observer's initials in each well's log book. Check the data loggers.

6. After 2 hours, take a second round of water levels. However, it is not necessary to obtain hand measurements from wells with transducers ("normal" round).

   Note: To ensure logging is being completed, each round should include a check mark on the data logger and the time should be noted on each transducers readout. Look for anomalies such as sudden changes on a particular channel. If a change occurs, obtain a manual measurement of the well in question to confirm the change.

7. If time permits, take another "normal" round of water-level measurement. At least 2 rounds of water-level measurements should be collected before the end of the day.

8. When the pumping test is monitored by an electronic data logger and pressure transducers, most of the data is stored electronically or on computer diskettes or tape. The data memory location numbers from the data dump start and finish should be noted at the end of each day. This information is transferred directly to the main computer and analyzed. To document the test, test data forms are kept in files with supplemental information and a computer printout of the data in the files.

6.5.2 Day 2

1. Take a complete round of water-level measurements and check the data loggers.
2. Set up the plumbing and flow meter from the wells to water tanks, or treatment facility.
3. Take a normal round of water-level measurements and check the date loggers.
4. Start the pump test at the specified flow rate. Measure the flow rate (Q) using totalizer, or note flow on flow meter.
5. After pumping has begun, a normal round of water-level measurements must be taken approximately every 1–3 hours. Check the data logger and a measurement of Q.
6. Download the data from the data logger and review with the project HG.

6.5.3 Day 3

1. Check logger(s).
2. Continue water-level measurement rounds through the day and evening.
3. Dump Campbell logger data to the cassette tape and record the memory location numbers from start to finish.

6.5.4 Day 4

1. Check logger(s).
2. Take a complete round of water-level measurements.
3. Before turning off the pump, take a normal round of water-level measurements.
4. Set the pumping well data logger to begin fast logging intervals (also done prior to the start of pumping) and turn off the pump for 5 seconds after start of fast logging.
5. Start recovery water-level measurements approximately 1–3 hours after the pump is off. At least 2 rounds (or more) of water-level measurements must be taken before the end of the day. It is not necessary to take manual water-level measurements through the night.
6. Download the data from the data logger and review with the project HG.

6.5.5 Day 5

1. Take a complete round of water-level measurements.
2. Turn off the data loggers.
3. Download the entire data from the data logger and review with the project HG.
4. Pull the transducers from the wells and wind up the transducer wires.

6.6 Constant Rate One-Hour Drawdown Test

6.6.1 Drawdown tests are conducted on wells with electric submersible pumps to determine transmissivity (T) and hydraulic conductivity (K) of the water-bearing zone(s). The optimum pumping rate for the test (estimated during final development) is one that puts maximum stress on the aquifer for 30–45 minutes, but does not draw the water level into the well screen or pump intake. Reaching a relatively "steady state" before ending the test is also important, because the rate of drawdown at the end of the test doesn't change or is slower compared to the rate of drawdown at the beginning of the test. This provides sufficient data to form a curve that can be matched to a type-curve allowing T an K to be calculated.

6.6.2 Water levels are measured in the pumping well and some observation well by a pressure transducer and recorded by a data logger. In addition, water levels in some wells are measured manually with an electric water level probe.

6.6.3 All information collected during the test should be recorded on the Hydraulic Test Field Sheet (Attachment C).

6.6.4 Information Prior to Set Up:

1. Check with DMT to determine if purge water needs collection/treatment based on analytical data obtained from water samples collected during development.
2. Flow rate for the test (estimated during final development).
3. Make, model, voltage, and horsepower of pump is necessary to obtain the correct control box.

4. Screen interval of the well and depth of the pump intake to avoid pumping the well dry or into the screen.
5. Check with HG to determine if any surrounding wells will communicate with the test well.

6.6.5 Set Up Procedures:

1. Set up flow meter and evacuation hoses, and plumb into collection tank.
2. Plug the extension cord into the generator and into the pump control box. The extension cord on/off switch box should be "OFF."
3. Manually record depth-to-water measurements in all wells to be monitored and note the time on the Hydraulic Test Field Sheet (Attachment C).
4. Set up the data logger and lower the transducer(s) to the maximum allowable depth as specified by the transducer(s) used.
5. Firmly attach the transducer line to a nearby anchor with duct tape, such as a post or a tree (not directly to the well's stove pipe) so it will not slip. Record the static logger readout.
6. While observing the logger readout, raise the transducer 1 ft. The logger readout should decrease by 1 ft. If the logger readout change corresponds to the actual change, lower it back down. If not, the transducer is malfunctioning and needs to be repaired.
7. Prime the well discharge tube by turning the pump on long enough to bring water to the first valve. Check for leaks and then shut off the pump. If necessary, repair any leaks with Teflon tape. Allow the water level in the well to recover about one-tenth of a foot of static before starting the test.
8. After the water level has sufficiently recovered, set the data logger to log according to the Hydraulic Test Plan (Attachment B).
9. To begin the test, turn on the logger 5 seconds before starting the pump. Preferably, start logging on the "even" minute and start pumping after 5 seconds (e.g., 10:00:00 "logger on," 10:00:05 "pump on").
10. Check flow rate (Q) using a 5-gal bucket or the totalizing flow meter on the collection tank. Q should be measured at regular intervals during the test (approximately every 10 minutes), more often at the beginning (approximately every 3–5 minutes).
11. At the beginning of the test, verify that the transducer is reading correctly by taking a manual water-level measurement with the water level probe.

    Note: If the transducer is not reading correctly, stop the test. Allow the water level to return to static and restart the test using a different transducer.

12. When the water level has become relatively stable (some drawdown will be continuing very slow [i.e., 0.1 ft/1–5 minutes]), pump for a few more minutes and turn off the logger. Usually, a minimum of 30 minutes is required and tests may run up to an hour or more, depending on the well.

13. Reset logging intervals for 5 seconds before turning off the pump. Continue logging recovery until 90 percent of the water level has returned to the pre-pumping level.

14. Break down the equipment.

15. Download the data from the data logger and review with the project HG.

16. Record the tape (Campbell) of the logger used and the type and serial number of the transducers(s).

6.7 Field Post Operation

6.7.1 After pumping ceases, continue to measure recovering water levels to verify results obtained from the pumping portion of the test. The recovering water levels in the pumping well and the observation wells are measured immediately following cessation of pumping; the recovery period should be at least half the length of the pumping portion of the hydraulic test. The decision to cease monitoring of water levels should be based on aquifer recovery.

6.7.2 Decontaminate or dispose of equipment per SOP 4.5.

6.7.3 If using an electronic data logger:

1. Stop logging sequence.
2. Save memory, and disconnect the battery at the end of the testing activities.

6.7.4 Replace testing equipment in storage containers.

6.8 Office Post Operation

6.8.1 Inventory equipment and supplies. Repair or replace all broken or damaged equipment and expendable items.

6.8.2 Return equipment to storage area, and report incidents of malfunctions or damage.

6.8.3 Review field forms for completeness.

6.8.4 Deliver logger data and original forms to the project HG and copies to the DMT, HGL, or SL, as appropriate.

6.8.5 Interpret hydraulic test field results with project HG. Analyze data using an appropriate analytical solution.

6.8.6 Send data logger or pressure transducers to the factory for recalibration, if needed.

7.0 QA RECORDS

7.1 Logbooks

7.2 Hydraulic Test Field Sheet

8.0 ATTACHMENT

Attachment A—Equipment Checklist

Attachment B—Hydraulic Test Plan

Attachment C—Hydraulic Test Field Sheet

Attachment A

Equipment Checklist

Equipment Checklist

____ Appropriate references and calculator

____ Barometric pressure transducer or recording barograph (for tests conducted in confined aquifers).

____ Calculator—data logger

____ Discharge hose or pipe

____ Duct tape

____ 12-volt battery (fully charged)

____ 230-volt generator

____ Electric water-level indicator

____ Electronic data logger (if transducer method is used)

____ Extension cord and on/off switch box

____ Five-gallon bucket

____ Flow meter

____ Hoses—1 in. and 3/4 in.

____ Interface probe

____ Pump control box (must equal voltage and horsepower of pump)

____ PVC fittings (elbows, unions, etc.)

____ Semilog graph paper (if required)

____ Signet flow meter

____ Steel tape (subdivided into tenths of feet)

____ Stopwatch or watch with second hand

____ Submersible pumps or turbine type.

____ Tape measure (subdivided into tenths of feet)

____ Water-level measuring device

____ Water-measuring device (i.e., orifice, weir, flow meter, or container)

____ Water-pressure transducer(s) and cables

____ Waterproof ink pen and logbook

Attachment B

Hydraulic Test Plan

HYDRAULIC TEST PLAN

GENERAL INFORMATION		By:
Location:	Livermore Site ❑ Site 300 ❑ Area:	
Test Type: (1-hour drawdown, longterm, step flow or drawdown, slug, facility startup)		
Test Well Name(s):		
Expected Start Date:		
Duration of Test:		
Treatment Unit or Method:		
Comments:		

TEST OBJECTIVE(S)	By:

TEST DESCRIPTION AND SPECIAL INSTRUCTIONS	By:

GROUND WATER CHEMISTRY IN TEST WELL(S)	By:

"without having to fill out an on-line request form" EXTRACTION WELL(S) DESCRIPTION			By:
Well(s)			
Screen Interval (ft-bgs/bmp)			
Pump Intake (ft-bgs/bmp)			
Depth to static water level (ft-bmp)			
Available Drawdown (ft)			
Extraction Flowrate (gpm)			
(only for step flowrate tests) Steps <Flowrate (gpm) - Duration(hrs)> 1 2 3 4 5			
Estimated Volume to be Extracted (gal)			
Pump Type and Size			
Extraction Flowrate Measurement			
Comments:			

Notes: **bgs**- below ground surface elevation, **bmp**- below measurement point elevation

SAMPLING PROTOCOL		By:
Sample Date/Time – **I**nfluent/**E**ffluent	Sample form Well(s)	Analysis (i.e. E601)
Initial >		
Final >		
Comments:		

WATER LEVEL MEASUREMENT SPECIFICATIONS	By:
Extraction Well:	
Observation Wells:	Shown on attached figure: Yes ❑ No ❑
Wells instrumented with transducers:	
Wells to be hand-measured:	
Collection of water levels in instrumented wells using data loggers and hand measured wells:	
Log Barometric Pressure Readings	Yes ❑ No ❑
PRIOR TO PUMPING: Log background water levels every 15 minutes for at least 24 hours prior to test.	
DURING PUMPING: Log water levels during test as indicated below: TEST WELL: Logarithmically increasing frequency ❑ or Linear at 15 minute intervals ❑ OBSERVATION WELLS: Logarithmically increasing frequency ❑ or Linear at 15 minute intervals ❑ HAND MEASURED WELLS: Linear at 60 minute intervals ❑	
DURING RECOVERY: Log water levels after pump shut-in as indicated below for at least 24 hours: TEST WELL: Logarithmically increasing frequency ❑ or Linear at 15 minute intervals ❑ OBSERVATION WELLS: Logarithmically increasing frequency ❑ or Linear at 15 minute intervals ❑ HAND MEASURED WELLS: Linear at 60 minute intervals ❑	
NEARBY EXTRACTION WELLS: Inform technicians of nearby extraction wells/facility to maintain constant flow rates in all extraction wells during the test. Inform them of potential water level changes in wells due to hydraulic testing.	
Comments:	

Note:
Verify availability of data loggers, transducers, and cable with Field Coordinator (Billy Clark).
Logging frequencies are subject to change as directed by LLNL Hydrogeologist or Field Coordinator.

GROUND WATER DISCHARGE	By:
Estimated Volume of ground water to be discharged (gals):	
Type of water storage tank and capacity: *(NOTE: see estimated volume to be extracted above to determine if adequate storage is available)*	
Discharge Location:	
Type of Discharge Permit Required ❑ NPDES: ❑ City of Livermore: ❑ None / Other (explain):	
Treatment of ground water required to comply with Discharge Permit:	Yes ❑ No ❑
Type of treatment, if necessary:	
Estimated Chemistry of ground water to be discharged:	
Comments:	

Attachment C

Hydraulic Test Field Sheet

HYDRAULIC TEST FIELD SHEET

Site	❑ Livermore Site ❑ Site 300	Page ___ of ___	By:
Test Well		Treatment Unit	
Test Type		Data Logger(s)	
Comments			
Totalizer: Start: (gals)	End:	> Total Gallons Extracted:	

Data Logging Start Date: / / Memory Loc.: Data Logging End Date: / / Memory Loc.:					Hydraulic Test Start Date: / / Hydraulic Test End Date: / /				
channel									
well ID									
xducer (psi)									
date/time									

LLNL Environmental Restoration Department (ERD)
Standard Operating Procedure (SOP)

ERD SOP 4.1: General Instructions for Field Personnel—Revision: 7

AUTHOR(S):
V. Dibley

APPROVALS: **Date**

Jesse Yow — 1/7/09
Department Manager

Ed Folan — 11-17-08
Engineering & Operations Division Leader

CONCURRENCE: **Date**

Rebecca Goodrich — 12/3/08
QA Implementation Coordinator

Type of Procedure (per ES&H Manual, Document 3.4)

☒ **Informational Use** ☐ **General Use** ☐ **Continuous Use**

1.0 PURPOSE

The purpose of this SOP is to provide general instructions to all Livermore Site and Site 300 personnel concerning activities required to be performed before, during, and after field investigations. These instructions are to ensure that field personnel understand the site, the objective and schedule of the field program, their authority, and their responsibilities.

2.0 APPLICABILITY

These instructions apply to all field personnel who conduct work at Site 300 and the Livermore Site for the ERD.

3.0 REFERENCES

3.1 V. Dibley (1999), *Quality Assurance Project Plan Livermore Site and Site 300 Environmental Restoration Projects* (UCRL-AR-103160 Rev. 2).

3.2 Site Safety Plan for Lawrence Livermore National Laboratory CERCLA Investigations at Livermore Site, March 2005 (UCRL-AR-21174 Rev. 5).

3.3 Site Safety Plan for Lawrence Livermore National Laboratory Comprehensive Environmental Response, Compensation, and Liability Act (CERCLA) Investigations at Site 300, March 2005 (UCRL-AR-21172 Rev. 4).

3.4 ERD Operations and Maintenance (O&M) Manuals.

3.5 Integration Work Sheets (IWSs).

3.6 Lawrence Livermore National Laboratory (LLNL) Environment, Safety and Health Manual.

3.7 Lawrence Livermore National Laboratory (2002), Site 300 Field Contractor Help Guide (UCRL-ID-148438).

3.8 Lawrence Livermore National Laboratory (2008), Restricted Off-Pavement Travel at Site 300 (LLNL-MI-405430) S300MGMT-11 Rev. 3.

4.0 DEFINITIONS

See SOP Glossary.

5.0 RESPONSIBILITIES

5.1 Department Manager (DM)

The DM's responsibility is to ensure that all activities performed by ERD at the Livermore Site and Site 300 are performed safely and comply with all pertinent regulations and procedures, and provide the necessary equipment and resources to accomplish the tasks described in this procedure.

5.2 Project Leader (PL)

The PL's responsibility is to ensure that all activities are performed safely and comply with all pertinent regulations and procedures, work is authorized through an Integration Work Sheet (IWS), and there is sufficient funding to initiate the work.

5.3 Engineering and Operations Division Leader (EODL)

The EODL's responsibility is to ensure that proper procedures are followed for activities (e.g., construction, activation, facility operation and sampling).

5.4 Site Safety Officer (SSO)

The SSO in consultation with the appropriate ES&H Team will designate the necessary level of personnel protective equipment (PPE) for the Field Personnel to safely accomplish their work.

5.5 Sample Coordinator (SC)/Drilling Coordinator (DC)

The SC and/or DC are responsible for providing Field Personnel with a sampling or work plan/schedule. In addition, the SC and/or DC will provide Field Personnel with enough information to perform the work safely and correctly. This information should include what operational and safety procedures are applicable to the work being tasked.

5.6 Functional Area Supervisor (FAS)/ Facility Point of Contact (FPOC)

An FAS or FPOC is responsible for being aware of the status of operations in their area and how they might impact persons requesting permission for restricted travel.

5.7 Field Personnel (FP)

FP are responsible for the safe completion of assigned tasks as described in the ERD SOPs, Site Safety Plan (SSPs), O&M Manuals, IWSs, and appropriate LLNL ES&H Manual procedures. They are required to document the work performed and to alert their immediate supervisors of any variances from procedures established in the above documents.

5.8 Field Support Personnel (FSP)

The FSP are responsible for providing necessary equipment, collection devices, and general field support, which enables sampling personnel to perform field activities in a timely and efficient manner.

6.0 PROCEDURES

6.1 Training

All ERD Personnel have a training plan that is required by their administrative supervisor's completion of a training questionnaire. The LLNL system "LTRAIN" tracks the training the LLNL personnel have completed and those courses required. ERD personnel working on the CERCLA clean-up require 40 hr SARA/OSHA (when determined by the PL, 24 hr SARA/OSHA training is the minimum requirement) with an annual refresher and 3-day on-the-job-training field experience. ERD personnel working at Site 300 require HS0095-W, "Site 300 Safety Orientation Training" and HS0096-W, "Valley Fever Awareness Training". All personnel should periodically check their LTRAIN file and ensure their training is up-to-date. Prior to commencement of field activities, perform all preparation activities including participation in the ERD Field Investigation Orientation Lesson Plan (course number EP7033-05).

Personnel are only to perform work for which they have been trained.

6.2 Activities to be Performed Before Field Work

6.2.1 Document Review

Document review should be performed prior to commencement of field activities. At a minimum the following list of documents should be reviewed:

- Sampling or work plans/schedules. The Sampling or Work Plan/Schedule should contain sufficient detail to allow the proper completion of work. The sampling plan should include sample collection method, required sample analysis, and analytical laboratory.
- SSP and IWSs. The responsible SSO, SC, or DC should provide Field Personnel with the safety procedures that are applicable to the work being tasked. *IWSs should be reviewed with field personnel and documented, as applicable.*
- Applicable SOPs. The responsible SSO, SC, or DC should direct Field Personnel to the SOPs that are applicable to the work being tasked. *Work should be performed to controlled SOPs only.* This ensures that the SOPs are the most up-to-date version.
- O&M Manual.
- Equipment owner/operator instructions.
- Site maps.
- Site documentation. For drilling activities, site data should be reviewed to estimate key parameters (i.e., sample target zones, depth, thickness, types of contaminants) and determine if proposed borehole location is clear of underground utility lines.
- Integration Work Sheets (IWSs). Ensure that the work is covered by an IWS and that the worker has reviewed the IWS.

6.2.2 Coordinate Schedules

- Arrange access to work sites. Periodically, portions of Site 300 are closed to access due to hazardous operations. The HS0095-W course provides instructions concerning entry into restricted areas. If a restricted area is encountered during the course of the field work *it is forbidden to go around a closed gate. This could result in physical injury.* The Field Personnel, SC, or SSO makes arrangements with the appropriate FAS or FPOC for access into areas prior to field personnel conducting work. The FAS or FPOC must give approval prior to entering. In addition, if drilling is to occur on private property, authorization must be received in writing prior to entrance.

- Sign-in board (Site 300 only). All personnel visiting Site 300 must log in and out on the sign-in board located inside Trailer 8726. Write your name, time of arrival, destination and estimated time of return on the board. Obtain a communications radio from the charger and place the magnetic tag onto the board indicating which radio will be used in the field. DO NOT leave the site without removing your name from the board and returning the radio (along with the magnetic tag) to the charger.
- Radio and/or radio identification names. A radio communications course (HS5606-W) must be taken prior to conducting work at Site 300. An off-road driving course (Driving the Site 300 Fire Trails, EP8064-003) is also necessary when performing work that requires driving off the paved roadways. IWS 11313, "Site 300 Off Road 4-wheel Driving and Restricted Travel to Perform ERD Activities" also covers this required training. Contact the SSO to determine if the driving course is needed to carry out a specific work assignment. A communications radio must be carried by field personnel to contact the appropriate individuals for guidance, assistance and in case of emergencies. Make sure the radio is fully charged, as indicated by the green light on the charger. Radios must be kept on and monitored for the duration of field activities.
- Restricted travel without prior permission could result in disciplinary action including the possibility of permanent access denial to Site 300. Prior to travel, read through and become familiar with the regulations set forth in the latest revision of the Site 300 Management Procedure, "Restricted Off-Pavement Travel at Site 300." If you do not have a copy and need one, please get in touch with the ERD Quality Assurance Implementation Coordinator (QAIC) and one will be provided. Personnel shall carry a copy of the procedure when conducting restricted travel and use the map provided to describe travel plans. Work that requires traveling or hiking more than 50 feet off pavement is considered restricted travel and requires approval from appropriate facility management and security before travel commences. Access approval must be obtained from the appropriate FAS prior to the proposed travel. After the FAS grants permission, then the Central Alarm Station (CAS) operator must be contacted who will ultimately approve or deny the travel request. To contact the CAS operator for restricted travel, call extension 3-5270 or call "MIKE" on the trunked radio system. Calling 3-5270 rings at the CAS unless B Division's Control Point (CP) is manned. The CAS operator is physically located in Livermore so a clear description of the travel plans must be communicated. Radio calls to Sierra 45 are answered by the CP operator (when the CP is manned) and, therefore, offer an alternate, direct means of communication to the CP. When calling the CAS Operator, you must wait for the Operator to acknowledge your call before proceeding to communicate. "MIKE" can also be contacted by phone at 3-5222 when requested to do so or if a radio becomes inoperable. Notify "MIKE" when you return to the paved road to conclude the restricted travel activity.

- Coordinate escorts. The Administrative Escort Services must be given a 24-hour notice when an escort is required to accompany field personnel in restricted areas.
- Arrange LLNL vehicle usage.
- Coordinate field support. At the Livermore Site, tankers and drums containing purge water may not be left at the well location, therefore, the SC may provide a specific order of wells to be sampled.
- Contact Site Planning/Plant Engineering. For Livermore Site drilling activities, Site Planning should be notified at least 2 weeks prior to performing drilling. For Site 300, Plant Engineering must approve drilling location.
- Acquire surveys/permits. Acquire any boring or well drilling permits required by state or local authorities. At Site 300, ecological and archeological surveys must be conducted within 60 days prior to drilling to check for cultural resources and endangered species at the drilling location if at a previously undisturbed site.

6.2.3 Assemble Materials/Equipment

- Obtain the appropriate logbook and field data collection forms. Refer to SOP 4.2, "Sample Control and Documentation" or the appropriate SOP or O&M.
- Assemble the appropriate supplies and/or equipment. Attachment A provides a general equipment checklist. Specific equipment checklists are provided in the applicable SOPs when necessary. If the sampling container and preservation requirements are not specified on the Ground Water Sampling Data Sheet, refer to SOP 4.3, "Sample Containers and Preservation," the SC, or a QC Chemist. Before sampling Site 300 monitor wells, Field Support Personnel must ensure that wells have sufficient collection drums available at the well head for purge water containment.
- Don appropriate field attire. Certain work conditions, such as sampling contaminated environmental media, may require various levels of PPE depending on the potential hazard to workers. Attachment B displays appropriate PPE for various levels of protection. Generally, field work only requires PPE Levels C and D. Field personnel should contact the SSO before starting any new field work or if uncertain about the level necessary to safely conduct field work. The appropriate ES&H Team makes the final determination of the appropriate level of PPE. *Do not conduct any field work if the original level of PPE is believed to be insufficient and contact the SSO.*
- Perform equipment maintenance, calibration, or calibration verification. The procedures are described in SOP 4.8, "Calibration, Verification, and Maintenance of Measuring Test Equipment (M&TE)."

6.3 Activities to be Performed During Field Work

6.3.1 Perform Work

- Perform work. Work should be performed as directed by the Sampling or Work Plan/Schedule and as described by the appropriate SOPs. Work not defined in site-specific sampling plans is not to be initiated without approval of the SSO, SC, or DC. Modifications to the work plans that may be required must be approved by the appropriate SC, DC, or other appropriate personnel and documented.
- Stop work. If violations to procedures or applicable health and safety requirements are observed, the Field Personnel should *stop work immediately* and notify their direct supervisor and/or the SSO. **Anyone can stop work if they believe operations are unsafe.**

6.3.2 Monitor Work

- Monitor work environment. Visually monitor working environment continually to ensure safety. Instrumentation should be used when specified by the applicable SOP, SSP, or SSO. Field blanks should be collected when designated by the sampling plan or if there is any reason to suspect air-borne contaminants (i.e., odors, dust, work being performed near by such as painting, fumigating, etc.). Refer to SOP 4.9, "Collection of Field QC Samples." All observations that can affect sample quality should be recorded in appropriate logbooks and/or field sheets.
- Monitor equipment. Equipment should also be monitored for contamination and decontaminated when necessary per SOP 4.5, "General Equipment Decontamination." Equipment blanks (rinsate samples) should be collected when designated by the sampling plan or if there is any reason to suspect potential cross-contamination. Refer to SOP 4.9, "Collection of Field QC Samples." In addition, follow SOP 4.9 whenever portable purging or sampling equipment is used.

6.3.3 Document Work

- Document work. Record all pertinent information in the appropriate logbook and field form as required by SOP 4.2 and in accordance with applicable SOPs as work progresses.
- Well entries. Access to wells for any reason must be documented in the Well Entry Logbook.
- Nonconformances. Document any problems encountered during operations on a Quality Improvement Form (QIF) per the instructions provided in SOP 4.12.

6.4 Activities to be Performed After Field Work

6.4.1 Clean-up Work Site and Equipment

- Decontaminate equipment. Decontaminate equipment per SOP 4.5, "General Equipment Decontamination."
- Dispose of waste properly. Waste should be disposed of in compliance with Radioactive and Hazardous Waste Management (RHWM) requirements. Sampling and Drilling wastes should be disposed of per SOP 1.8, "Disposal of Investigation-Derived Wastes (Drill Cuttings, Core Samples, and Drilling Mud)". Consult with the appropriate RHWM representative or the Environmental Protection Department analyst when in doubt.
- Inventory sampling equipment and supplies. Repair or replace all spent, broken or damaged equipment. Return equipment to proper storage area and report incidents of malfunctions or damage. If well equipment is missing or damaged or there are other problems at the well site, a Well Maintenance Form should be initiated per SOP 2.12, "Ground Water Monitor Well and Equipment Maintenance."
- Mark borehole or sampling location (when applicable). Durably mark borehole or sampling location with visible identification (ID) to allow survey team to locate and survey location. Place temporary cover over borehole as appropriate.

6.4.2 Review Documentation

- Check that all field data is properly recorded. Logbooks, CoCs, and field data collection forms should be filled out as required by SOP 4.2 and applicable ERD SOPs. Cross-check samples collected with the sampling or work plan. Note discrepancies. Check sample labels for accuracy.
- Deliver forms and logbooks. Return logbooks to the appropriate storage location (i.e., at the facility, with the piece of equipment, to the SC or Data Management Team [DMT]). All original COCs accompany samples to the analytical lab. Provide the COC receipt copy to DMT and the Technical Release Representative (TRR) copy to the TRR. File, copy, and deliver the data collection forms as appropriate. The SC should receive field data collection forms daily.

6.4.3 Dispatch Samples (when applicable)

- Notify analytical laboratory. Laboratory capacity should be checked before shipping samples that are collected before holidays and with short holding times and quick turnaround times to ensure laboratory personnel are available.
- Package and ship samples. Handle, package, and ship samples as directed in SOP 4.4, "Guide to the Handling, Packaging, and Shipping of Samples."

6.4.4 Store Core Samples (when applicable)

- Store core. Store recovered sediment and rock core per instructions described in SOP 1.15, "Well Site Core Handling."

7.0 QA RECORDS

7.1 Field Data Collection Forms

7.2 Document Control Logbooks

7.3 CoCs

8.0 ATTACHMENTS

Attachment A—Equipment Checklist

Attachment B—Personnel Protective Equipment List

Attachment A

Equipment Checklist

Equipment Checklist

The purpose of the list presented below is to aid field personnel in identifying those supplies necessary to conduct a particular field operation. It is not intended to be all inclusive. It is the responsibility of field personnel to determine and obtain the supplies required for successful performance of assigned tasks.

____ Air tight plastic bags
____ Any necessary packaging (i.e., bubble wrap)
____ CoC forms
____ Field sheets
____ Sample containers (see SOP 4.3)
____ Shipping forms
____ Site Safety Plan
____ Barricades
____ Blue ice or bagged ice
____ Calculator
____ Camera (authorized personnel only)
____ Caution tape
____ Clipboard
____ Cold weather gear
____ Coolers
____ Distilled (organic-free) water
____ Drinking water
____ Duct tape
____ Ear plugs
____ First aid kit
____ Flagging
____ Hand lens
____ Hard hat
____ Hat
____ Health and Safety Plan
____ Lath/stakes
____ Overshoes
____ Organic Vapor Analyzer (OVA) and/or photoionization detector (PID)
____ Pens, pencils, permanent markers
____ PPE, as appropriate
____ Preprinted labels
____ Protractor
____ Radio
____ Rain suit (if necessary)
____ Safety shoes/boots
____ Sampling, field, or facility logbook
____ Sampling Plan
____ Snake guards
____ SOPs
____ Sample preservative
____ Stop watch
____ Sun screen

Equipment Checklist (cont.)

____ Tape measure (tenths)
____ Tool box
____ Water-level indicator
____ Well Specification Table
____ Work gloves/sampling gloves

Attachment B

Personnel Protective Equipment

Personnel Protective Equipment[a]

Level A	Level A Protection
Should be worn when the highest level of respiratory, skin, and eye protection is needed.	Supplied-air respirator (MSHA/NIOSHA approved) Fully encapsulating chemical-resistant suit Coveralls (optional) Long cotton underwear (optional) Gloves (inner and outer), chemical resistant Boots, chemical resistant Hard hat (optional) Disposable gloves and boot covers (optional) Cooling unit (optional) Two-way radio communications (optional)
Level B	**Level B Protection**
Should be worn when the highest level of respiratory protection is needed, but a lesser level of skin protection.	Supplied-air respirator (MSHA/NIOSHA approved) Self-contained breathing apparatus Chemical resistant clothing Long cotton underwear (optional) Coveralls (optional) Gloves (inner and outer), chemical-resistant Boots (outer), chemical-resistant, steel toe and shank Boot covers (outer), chemical resistant Hard hat (face shield) (optional) Two-Way radio communications (optional)
Level C	**Level C Protection**
Should be worn when the criteria for using air-purifying respirators are met.	Air-purifying respirator, full-face, canister equipped (MSHA/NIOSHA approved) Chemical-resistant clothing Coveralls (optional) Long cotton underwear (optional) Boots (outer), chemical resistant, steel toe and shank Boot covers (outer) (optional) Hard hat (face shield) (optional) Escape mask (optional) Two-way radio communication (optional)
Level D	**Level D Protection**
Should be worn only as a work uniform and not on any site with respiratory or skin hazards. It provides no protection against chemical hazards.	Coveralls Gloves (optional) Boots/shoes, leather or chemical-resistant Safety glasses/chemical splash goggles (optional) Hard hat (face shield)

[a] ES&H Team 4 along with ERD personnel will decide which level of PPE to use for the safety of Field Personnel.

LLNL Environmental Restoration Division (ERD)
Standard Operating Procedure (SOP)

ERD SOP 4.2: Sample Control and Documentation—Revision: 7

AUTHOR(S):
V. Dibley, R. Goodrich

APPROVALS: **Date**

Jesse Roe — 9/8/06
Division Leader

[signature] — 9/7/06
Hydrogeology & Decision Support Group Leader

CONCURRENCE: **Date**

Rebecca Goodrich — 9/7/06
QA Implementation Coordinator

1.0 PURPOSE

The purpose of this SOP is to describe the procedure for sample control and completion of required documentation to ensure traceable and defensible sample results.

2.0 APPLICABILITY

This SOP is applicable to ERD activities and those Operations and Regulatory Affairs Division activities performed by ERD that require sample control and documentation. ERD work activities are conducted within the framework of the institutional Integrated Safety Management System (ISMS). The Environmental Management System (EMS) is a component of the ISMS, which is also supported during the planning, performing, and evaluation of the work processes.

3.0 REFERENCES

3.1 LLNL Environmental Protection Department, EPD Quality Assurance Management Plan (QAMP).

4.0 DEFINITIONS

See SOP Glossary.

5.0 RESPONSIBILITIES

5.1 Division Leader (DL)

The DL's responsibility is to ensure that all activities performed by ERD at the Livermore Site and Site 300 are performed safely and comply with all pertinent regulations and procedures, and provide the necessary equipment and resources to accomplish the tasks described in this procedure.

5.2 Project Leader (PL)

The PL's responsibility is to ensure that all activities are performed safely and comply with all pertinent regulations and procedures, work is authorized through an IWS, and there is sufficient funding to initiate the work.

5.3 Hydrogeology & Decision Support Group Leader (HDSGL)

The HDSGL's responsibility is to ensure that proper procedures are followed and required documentation is completed for activities, e.g., drilling, borehole logging, sampling, well installation and development.

5.4 Sampling Coordinator (SC)/Drilling Coordinator (DC) or Facilities Operation Manager (FOM)

The SC/DC's or FOM's responsibility is to coordinate and schedule sampling activities, ensuring that all activities are recorded in a Document Control Logbook and that sampling data sheets (as required) and CoCs are completed correctly.

5.5 Field Personnel (FP)

Field personnel are responsible for following this procedure when sample control and documentation are required.

5.6 Data Management Team (DMT)

The DMT is responsible for issuing logbooks and maintaining a record documenting all logbook transactions, as well as archiving completed logbooks, field logs, and Chain-of-Custody (CoC) forms. DMT responsibilities also include producing the Sampling Plan using the Sample Planning and COC Tracking (SPACT) application.

6.0 PROCEDURE

6.1 Issuance and Archival of Logbooks

Document Control logbooks are to be bound with consecutively numbered pages. DMT assigns each logbook a unique code and issues the logbooks upon request. A list of issued logbooks and their locations is maintained by the DMT. Completed logbooks are to be returned to DMT for archival.

6.2 Sampling Document Control Logbooks

Entries in the sampling Document Control Logbooks should reflect the sampling event as accurately as possible (guidelines for entries can be found near the front cover of each logbook) and include the following essential information:

- Date and time of sampling.
- Sample identification (ID) code.
- Method of sample collection, including preservation techniques, size or volume, description of the matrix of the sample, and any deviations or anomalies noted.
- Requested analysis and analytical lab performing the analysis.
- Condition of sampling site relevant to sample validity when applicable.
- Results of associated field measurements.
- Calibration information pertaining to field instruments used for the sampling event.
- ID of field personnel performing the work.
- ID of field equipment (model number, serial number).
- Special notes of other activities in the area which may have an impact on analytical results.

Note: Logbook entries should be made in indelible ink. Any changes/corrections made to logbook entries should have a single line thorough it with the date and initials of the personnel making the changes. DO NOT white out or remove pages from logbooks! Blank space should be lined out and initialed.

6.3 Treatment Facility Document Control Logbooks

Entries in the Treatment Facility Document Control Logbooks should reflect the activities and events that take place in and around the Treatment Facility including but not limited to the following:

- Date and time of activity or event.
- ID of personnel performing work.
- ID of equipment used to perform activities (e.g., organic vapor analyzer, thermohydrocarbon analyzer).

- Calibration information as needed per SOP 4.8, "Calibration/Verification and Maintenance of Measuring and Test Equipment (M&TE)."
- Recording of Facility Data as requested.
- Treatability Test Information.
- Analytical laboratories utilized, type of sample, etc.

Note: Logbook entries should be made in indelible ink. Any changes/corrections made to logbook entries should have a single line thorough it along with the date and initials of the personnel making the changes. DO NOT white out or remove pages from logbooks! Blank space should be lined out and initialed.

6.4 Field Data Collection Forms

6.4.1 Specific field data collection forms are used during sampling activities. Each data collection form initiated during sampling becomes a controlled document and receives a document control number. The document control number is derived from the logbook code and the Document Control Logbook page number that was used to document that sampling event. For example, a ground water sample that has sampling information recorded in logbook AH, page 23, would be assigned document control number AH023. Do not hyphenate and always use five or more places.

6.4.2 The Ground Water Sampling Data Sheet (Attachment C in SOP 2.1) is used during sampling activities. The Borehole/Well Construction Log (SOP 1.1, Attachment A) is used during drilling activities. Complete the forms as described in the appropriate SOP.

6.5 Chain-of-Custody (CoC) Record

The primary objective of using a CoC is to create an accurate written record that can be used to trace the possession and handling of the sample from the moment of its collection through analysis and receipt of data. The CoC is a legal document.

6.5.1 Issuance and Archival of CoCs

- Blank CoCs are obtained from DMT.
- Electronic COCs are produced from information in the Sampling Plan.
- Completed CoCs are archived by DMT.

6.5.2 Required Documentation

The triplicate CoC form is handwritten (Attachment A) or a CoC may be electronically produced (Attachment B) and should contain the following information:

- Assign a document control number as described in Section 6.4.1.
- Sample matrix. Sample matrix codes are listed on the back of the CoC (handwritten CoCs only, not electronic forms).

- Name of sampler and employer.

- Requested analysis code. The requested analysis code is listed on the Sampling Plan, if the code is not listed, contact SC/DC for the appropriate code.

- Number and type of container(s).

- Sample ID and sample date/time. The sample ID is listed on the Sampling Plan/Work Plan. If sample ID is not known, contact DMT for the correct naming convention.

- Study area/operable unit from which sample originated.

- The analytical laboratory name. This is the laboratory where samples are to be sent as designated by the Sampling Plan.

- Individuals requiring facsimile (fax) or electronic mail (e-mail) results. DMT is automatically indicated on the CoC. Two other individuals may also be indicated.

- Requester name. This is the organization samples are being collected for.

- Additional information/instructions or remarks. These sections should be used to indicate if any additional services are to be performed at the laboratory, e.g., filtration.

- Requested turnaround time (TAT). Standard TAT is 20 days. If a faster TAT is required, check with the QC Chemist or laboratory for available TATs. A separate CoC should be completed for each different turnaround time specified.

- LLNL account number. The appropriate account numbers are provided by the SC/DC.

- Critical or Clean well note. The analytical laboratory should be instructed in the remarks section of the CoC form to verify any detections in the critical or clean sampling locations as listed in the Sampling Plan and contact the appropriate ERD personnel immediately.

- The appropriate relinquishing and receipt signatures. When using the triplicate COC form, the sampler signs the COC to relinquish the samples. The CoC pink copy with the courier's signature is left in the Sample Pick-up Location to be picked up by the DMT or personnel assigned to the task. The golden rod copy is given to the appropriate Technical Release Representative (TRR). The samples may also be hand carried to the SC, delivered to an on-site laboratory, or to the LLNL Shipping Department. In these instances, the CoC pink copy is retained by the field personnel and given to DMT. When using electronically produced COCs, the samples are relinquished by Field Personnel and the COC accompanies the samples to the laboratory. Field Personnel supplies the DMT with the Receipt Copy and the TRR receives the TRR Copy. Field personnel should also make a photo copy for their records.

- Work Requested and/or Approved By. COCs will not be processed unless the work has been appropriately approved and authorized. This information is provided on the handwritten COC form by circling the applicable Project Leader indicated on the "red stamp" or by populating the fields, "Work Authorized By" and "TRR Approver" on the electronically produced COC forms.

6.6 Shipping Forms

All environmental samples classified as non-hazardous must be accompanied by an LLNL ShipIt Form (see SOP 4.4, Attachment A) when going offsite for analysis. The ShipIt form shall be completed by recording the COC number on the form and the corresponding ShipIt Form number on the COC. The samples will not be picked-up without the required information on the COC and ShipIt Forms. The ShipIt Form consists of the original form, which goes to the LLNL Shipping Department when complete and a copy that the courier retains to transport samples offsite. ShipIt Forms are also required for samples that require LLNL to pay for shipping (via Federal Express) and must go through the LLNL Shipping Department. The shipping of samples is fully described in ERD SOP 4.4.

6.7 Sample Identification Labels

Use ID labels provided by the appropriate laboratory or labels electronically produced when tagging or labeling sample containers. The sampling personnel may fill out sample container labels after collecting samples or prior to collecting samples at each location. However, extreme care must be taken to ensure that the container label corresponds to the correct location! Waterproof ink must be used on the label.

6.7.1 Issuance and archival

Sample labels may be obtained from the analytical laboratory where the samples are to be sent. Sample labels may also be electronically produced using the SPACT application. Field personnel should have a small stock of sample labels from analytical labs on-hand at all times. Labels are not archived but are destroyed with sample disposal at the laboratory.

6.7.2 Required Documentation

The Sample ID Label may be handwritten or electronically generated and must include the following information:

- Sample ID. The sample ID can be made up from the combination of various factors such as location, sample type, etc. The DMT's Taurus Database Location Table contains all sample IDs previously used and is continuously updated with new sample locations. If a new location is to be sampled that is not in the Location Table or an experiment is to be conducted, the DMT must be consulted and approve all new sample IDs. The new names will then be added to the Location Table.
- Project name.
- Sample date. The date when the sample was collected.
- Sample time. Time is recorded according to the 24-h clock (e.g., 1:00 a.m. = 0100 h, 3:00 p.m. = 1500 h).

- Samplers' initials. The initials of personnel conducting the sampling.
- Preservation method. Any preservative added to the sample should be indicated.
- Comments. Any additional information.
- Requested analysis. The type of analysis to be performed on the sample. (Optional)

7.0 QA RECORDS

7.1 Chain-of-Custody forms

7.2 Document Control Logbooks

7.3 Ground Water Sampling Data Sheets

7.4 Borehole/Well Construction Logs

8.0 ATTACHMENT

Attachment A—Example Chain-of-Custody Form

Attachment B – Example of Electronic Chain-of-Custody Form

Attachment A

Example of Chain-of-Custody (Triplicate Form)

ERD Chain-of-Custody Record and Analytic Instructions

A 34554

Sampled By _____

Sampler's Employer: _____

Project Name _____

Analytical Lab Please
Fax or Email copies to:

Requester, (circle one)
S300
WGMG
Livermore

Send all results to:
Attn: ERD DMG L-528
Lawrence Livermore
National Laboratory
7000 East Ave.
Livermore, CA 94550

Field Log Book# _____ Page _____ of _____

LLNL Acct. # _____ **Release #** _____

Analytical Laboratory Name _____

Analytical Laboratory Log # _____

name _____ (circle one) Fax# 925-422-6950 / Email _____

name _____ Fax# 925-422-6950 / Email _____

* **Analytical Lab, when Email is requested always Email ERD_DMG !**

Sample Identification	Sample Date/Time	Matrix[2] Container[3]	# of Cont.	Study Area	Analysis & Turnaround Required[1]	Additional Instructions to Lab / * Remarks *
1						
2						
3						
4						
5						
6						
7						
8						
9						

Signature	Company	Time	Date
Relinquished by			
Received by			
Relinquished by			
Received by			
Relinquished by			
Received by			

[1] Enter the number of days or hours for TAT of the official printed report. See Requested Analysis code list for available TAT's for each type of analysis. Example: 24h = 24 hours / 20d = 20 day

[2] Sample Matrix Codes: **See list on back of pink copy**

[3] Container type codes: **V** = VOA Bottle, **P** = Polyethylene Bottle, **G** = Glass Bottle, **T** = Brass Tube, **B** = Bag, **S** = Stainless Steel Tube, **O** = Other (specify under remarks)

Work Requested & Approved By :
Livermore Site
Site 300
WGMG
Authorizing TRR : *Jeffrey Groth*

Lindee Berg
Leslie Ferry
Bill Hoppes

To receive copies of this data from DMG
CC.

Revision 4.6
21-jul-99 ERD

White : Laboratory return to ERD Attn: ERD Data Management Team L-528 **Yellow : Analytical Lab** **Pink : Sampler leave with ERD** Attn: ERD Data Management Team L-528 **Gold : Sampler Leave with TRR**

☆ U.S. GOVERNMENT PRINTING OFFICE: 2004-685-661

Attachment B

Example of Chain-of-Custody (Electronically Produced Form)

Chain of Custody

Attn: ERD Data Management Team
Lawrence Livermore National Laboratory
P.O. Box 808 L-528
Livermore, CA 94551

Work Authorized By: RICHARD BLAKE
TRR Approver: COLEEN BOLLINGER
Project Info:

Access/COC #: 36848
Document Control #: AA11052
Requester/LLNL Analyst: WGMG
Sampler: campbell42
Project/Network: 3EMG
LLNL Acct #: 3297-51
Fax/Email #1: 925-422-2095
DMT Additional Copies:

Analytical Lab: FGLSTK
TAT: 20d
Analytical Lab Log #:
Organization: ERD
Release #: 84930
Fax/Email #2: rueppel1

Additional Instructions:

Sample ID	Sampled Date/Time	Matrix	Cont. Type	Cont. Count	Study Area	Req. Analysis	Analysis Detail	Lab Instructions
EGSAFB	08/03/2006 12:48	GW	P	1	GSA	SM9221	SHO	
W-26R-01	08/03/2006 13:10	GW	P	1	GSA	SM9221	SHO	
W-35A-04	08/03/2006 08:57	GW	P	1	GSA	SM9221	SHO	
W-35A-59Y	08/03/2006 08:19	GW	P	1	GSA	SM9221	SHO	
W-7DS	08/03/2006 10:20	GW	P	1	GSA	SM9221	SHO	
W-7PS	08/03/2006 11:54	GW	P	1	GSA	SM9221	SHO	

RECEIVED
AUG 10 2006
ERD DATA MGMT

Relinquished Signature	Company	Date	Time	Received Signature	Company	Date	Time
1 [signature]	LLNL/ERD	8/3/2006	1408	2 [signature]	FGL	8/3/06	1408
2				3			
3				4			
4				5			

Revision: 04/10/2006

Signature Order - 1: Sampler, 2: Courier, 3: Lab, 4: Analyst, 5: DMT

LLNL Environmental Restoration Department (ERD)
Standard Operating Procedure (SOP)

ERD SOP 4.3: Sample Containers and Preservation
Revision: 6

AUTHOR(S):
V. Dibley, R. Goodrich

APPROVALS:	Date
Jesse Yow Department Manager	3/9/09
Hydrogeology & Decision Support Division Leader	1/26/09

CONCURRENCE:	Date
Rebecca Goodrich QA Implementation Coordinator	3/9/09

Type of Procedure (per ES&H Manual, Document 3.4)

☒ Informational Use ☐ General Use ☐ Continuous Use

1.0 PURPOSE

This procedure defines ERD's protocol regarding sample volume, container, holding time, and preservation method requirements for water, waste, soil, rock sediment, and sludge sampling recommended by the Contract Analytical Laboratories (CALs) and the available regulatory guidance.

2.0 APPLICABILITY

This procedure is to be used as a general guide for sample container and method of preservation for environmental samples collected by the Environmental Restoration Department (ERD). ERD work activities are conducted within the framework of the institutional Integrated Safety Management System (ISMS). The Environmental Management System (EMS) is a component

of the ISMS, which is also supported during the planning, performing, and evaluation of the work processes.

3.0 REFERENCES

3.1 U.S. EPA (1993), *Test Methods for Evaluating Solid Waste Physical/Chemical Methods*, SW-846, 2nd edition, Washington, D.C.

3.2 U.S. EPA (1992), *40 Code of Federal Regulations,* Chapter 1, Section 136.3, Table II, Washington, D.C.

3.3 U.S. EPA (1983), *Methods for Chemical Analysis of Water and Wastes,* EPA-600/4-79-020, Washington, D.C.

4.0 DEFINITIONS

See SOP Glossary.

5.0 RESPONSIBILITIES

5.1 Department Manager (DM)

The DM's responsibility is to ensure that all activities performed by ERD at the Livermore Site and Site 300 are performed safely and comply with all pertinent regulations and procedures, and provide the necessary equipment and resources to accomplish the tasks described in this procedure.

5.2 Project Leader (PL)

The PL's responsibility is to ensure that all activities are performed safely and comply with all pertinent regulations and procedures, work is authorized through an Integration Work Sheet (IWS), and there is sufficient funding to initiate the work.

5.3 Hydrogeology & Decision Support Division Leader (HDSDL)

The HDSDL's responsibility is to ensure that proper procedures are followed and activities are conducted safely, consistently, and adequately.

5.4 Quality Control (QC) Chemist

The QC Chemist is responsible for providing information regarding appropriate sample volumes, containers types, preservation requirements, and hold times for the analyses performed in ERD by the analytical laboratories.

5.5 Sample Coordinator (SC) or Drilling Coordinator (DC)

The SC's or DC's responsibility is to supply the sampling personnel with a sampling plan that contains the requested analyses, required volume, sample containers, and type of preservation.

5.6 Field Personnel (FP)

Field personnel are responsible for collecting the appropriate volume of samples necessary for analysis in the correct containers using the proper preservation technique. In addition, field personnel are responsible for considering sample hold times when collecting samples and shipping to the analytical laboratories.

6.0 PROCEDURES

6.1 Discussion

6.1.1 Preservation methods are generally limited to pH control, chemical addition, refrigeration, and freezing. Methods of preservation are intended to: retard biological action, hydrolysis of chemical compounds and complexes, and to reduce the volatility of analytes and adsorption effects.

6.1.2 Containers can introduce positive or negative errors by contributing contaminants through leaching or surface desorption, and depleting concentrations through adsorption. Therefore, containers such as Borosilicate glass, linear polyethylene, polypropylene, or Teflon should be used for collecting environmental media. If necessary, brass or stainless steel tubes can be used during drilling operations. Do not use other plastic containers or lids and aluminum foil due to possible sample contamination from the phthalate esters and other hydrocarbons within the plastic and on the foil surface.

6.1.3 All sample containers should be precleaned. VOA vials should be certified clean by the vendor.

6.1.4 Due to the short holding times of some constituents, sampling of these should not be performed on Fridays or before holidays. Field personnel should alert the laboratories that short hold time samples are pending so that samples can be redirected if the laboratories workload prohibits their ability to analyze the samples before the hold time expiration.

6.2 Procedure

6.2.1 Obtain the sampling plan. A sampling plan may be obtained from the SC or DC that lists the area and well or location to be sampled, the requested analyses, container type, number of containers, the analytical laboratory the sample is to be sent, and other sampling information.

6.2.2 Determine sample container and/or preservation requirements. Using the sampling plan determine the type of bottles, preservatives, holding times, and filtering requirements. Calculate the number of each type of container required and gather sampling materials as listed in the appropriate sampling or drilling SOP. When planning an experiment where samples need to be collected, contact the Quality Control (QC) Chemist if help is needed to determine sample volume, container type, holding times, or other relevant sampling/analysis information.

6.2.3 Obtain the appropriate containers from storage. Sample containers are available from the laboratory where samples are to be analyzed. Containers are retrieved from sample bottle inventory. Obtain a cooler and fill with ice (either loose, bagged, or Blue). Blue ice should be bagged and used when shipping samples via Federal Express (see SOP 4.4, "Guide to the Handling, Packaging, and Shipping of

Samples"). See SOP 4.9, "Collection of Field Samples" for the required QC sample requirements. Sufficient supplies of sample containers, trip blanks, temperature blanks (as required by lab), and water for field blanks should be maintained and stored appropriately.

6.2.4 Collect samples. Samples should be collected as described in the appropriate sampling or drilling SOP.

Note: Sample containers should be filled so that the sample does not come into contact with the sampler's gloves, thus potentially causing contamination.

6.2.5 Filter samples. Samples requiring filtering (such as dissolved metals) should be filtered and preserved at the laboratory unless otherwise determined by the SC or DC. The CoC should describe any filtration the laboratory needs to perform.

6.2.6 Preserve samples. It is ERD protocol not to preserve samples in the field, but request that the analytical laboratory perform filtration and/or preservation of the sample(s) upon receipt. In the rare case that a sample must be field preserved the following guidelines are provided.

A. If the samples are to be preserved, the sampler should:

- Consult a QC Chemist to determine the approximate volume of acid (or base) needed to preserve a sample.
- Preserve the appropriate samples using the pre-determined amount of acid (or base).

Note: Samples shipped via common carrier or U.S. Postal Service, must comply with the Department of Transportation Hazardous Materials Regulations (49 CFR part 172), and is the responsibility of the person who prepared the material for shipment to ensure this compliance is met. For the preservation requirements of samples, the Office of Hazardous Materials, Materials Transportation Bureau, Department of Transportation (DOT) has determined that the Hazardous Materials Regulations do not apply to the following materials: Hydrochloric acid (HCL) in water solutions at concentrations of 0.04% by weight or less (pH about 1.96 or greater); nitric acid (HNO_3) in water solutions at concentrations of 0.15% by weight or less (pH about 1.62 or greater); sulfuric acid (H_2SO_4) in water solutions at concentrations of 0.35% by weight or less (pH about 1.15 or greater); and sodium hydroxide (NaOH) in water solutions at concentrations of 0.08% by weight or less (pH about 12.3 or less).

B. If samples that require preservation at the time of collection cannot be preserved in the field or upon returning from the field, samples are to be preserved by the laboratory immediately upon receipt. This should be clearly noted on the CoC. In all cases, samples are to be preserved within 12 h from the time of collection, except in the instances where the samples can be analyzed within their unpreserved holding time.

C. Radiological samples must be sent to the laboratory within 5 days of sample collection to ensure proper filtration and/or preservation is performed within a timely manner.

6.2.7 Keep samples at the proper temperature. Samples requiring refrigeration of 4°C must be protected from getting wet. Samples must be immediately placed in an ice chest containing either Blue Ice packs (in air-tight plastic bags), or bagged or loose ice cubes. If samples are not submitted to the laboratory daily, ice chests should be checked periodically and thawed ice replaced.

6.2.8 Document preservation. Note sample preservation methods in sampling logbook**,** on sample label, and on CoC as appropriate.

6.2.9 Return unused sample containers to their appropriate place.

7.0 QA RECORDS

7.1 Completed Chain-of-Custody forms

7.2 Document Control Logbooks and field sheets

8.0 ATTACHMENTS

Not applicable.

LLNL Environmental Restoration Division (ERD)
Standard Operating Procedure (SOP)

ERD SOP 4.4: Guide to Packaging and Shipping of Samples—Revision: 6

AUTHOR(S):
P. Daley, R. Goodrich

ENVIRONMENTAL RESTORATION DIVISION
CONTROLLED COPY
#
THIS IS A RED STAMP
ERD

APPROVALS:	Date
Jennifer Lew Division Leader	8/30/06
Tina M. Carlsen Environmental Chemistry and Biology Group Leader	8-2-06

CONCURRENCE:	Date
Rebecca Goodrich QA Implementation Coordinator	8/3/06

1.0 PURPOSE

The purpose of this SOP is to define the steps required to properly package and ship environmental samples to analytical laboratories and off-site vendors. The transportation of samples must be designed to protect the integrity of the sample, assure proper identification of the samples, and comply with applicable regulations.

2.0 APPLICABILITY

This procedure is applicable to the packaging, and shipping of environmental samples by the ERD for the Operations and Regulatory Affairs Division (ORAD) and the ERD Projects. ERD work activities are conducted within the framework of the institutional Integrated Safety Management System (ISMS). The Environmental Management System (EMS) is a component of the ISMS, which is also supported during the planning, performing, and evaluation of the work processes.

3.0 REFERENCES

3.1 Code of Federal Regulations, 49 U.S. Code 5103 (1-26-1998 Edition), Office of the Federal Register, National Archives and Records Administration, U.S. Govt. Printing Office, Washington, D.C. 20402-9328.

3.2 Code of Federal Regulations, 40 CFR ch. 1 (7-1-92 Edition), Part 136.3, Office of the Federal Register, National Archives and Records Administration, U.S. Govt. Printing Office, Superintendent of Documents, Mail Stop SSOP, Washington, D.C. 20402-9328.

3.3 Code of Federal Regulations, 49 CFR, Parts 171 and 172.101, Section 8, Office of the Federal Register, National Archives and Records Administration, U.S. Govt. Printing Office, Superintendent of Documents, Mail Stop SSOP, Washington, D.C. 20402-9328.

3.4 Code of Federal Regulations, 49 CFR 173.436, Exempt material activity concentrations and exempt consignment activity limits for radionuclides.

3.5 ES&H Manual Volume II, Document 20.2, LLNL Radiological Safety Program for Radioactive Materials.

3.6 Mazzullo, E. T. (2003), "Hazardous Materials Regulations (HMR; 49 CFR Parts 171-180)," letter to Henry L. Longest II, U.S. EPA, dated February 13, 2003, from E. T. Mazzullo, Director, Office of Hazardous Materials Science, U.S. Department of Transportation Research and Special Programs Administration, Washington, D.C.

4.0 DEFINITIONS

See SOP Glossary.

5.0 RESPONSIBILITIES

5.1 Division Leader (DL)

The DL's responsibility is to ensure that all activities performed by ERD at the Livermore Site and Site 300 are performed safely and comply with all pertinent regulations and procedures, and provide the necessary equipment and resources to accomplish the tasks described in this procedure.

5.2 Quality Assurance Implementation Coordinator (QAIC)

The QAIC is responsible for working with the appropriate personnel in situations where it may become necessary to determine whether samples are hazardous or non-hazardous. The QAIC will ensure samples are properly managed to meet all applicable regulatory packaging and shipping requirements.

5.3 Sampling Coordinator (SC) or Drilling Coordinator (DC)

The SC or DC is responsible for contacting the QAIC to determine sample classification if the classification is unknown due to being collected from within an uncharacterized area or suspected to be hazardous.

5.4 Technical Release Representative (TRR)

The TRR, or their designee, is responsible for preparing LLNL shipping forms (ShipIt; Attachment A) in advance of sample collection activities.

5.5 Field Personnel (FP)

The FP are responsible for properly packaging, and shipping samples collected by the ERD for the ORAD and the ERD Projects. They are also responsible for delivering samples to the Sample Pick-up Location or Sampling Coordinator (SC) for shipment or delivery to the laboratory in accordance with all applicable internal and external regulations and procedures. They must also ensure that the samples delivered are representative of the original material. The FP must complete the Chain-of-Custody (CoC) and LLNL ShipIt Forms to accompany samples to analytical labs for analysis.

6.0 PROCEDURE

When samples collected at a site are classified hazardous or environmental nonhazardous, a distinction between these samples must be made to (1) determine the appropriate procedures for transporting the samples, and (2) protect the health and safety of the shipping and laboratory personnel receiving the samples. Special precautions, procedures, and secondary containment areas within the analytical laboratories will be used when hazardous samples are received.

6.1 Preparation

Prior to conducting work activities, perform the applicable preparation activities described in SOP 4.1, "General Instructions for Field Personnel". Personnel who are new to the LLNL project will receive direct field supervision and on-the-job training (OJT) from a Subject Matter Expert (SME) for at least the first 24 hours of field activity using the ERD Field Investigation Orientation Lesson Plan (course number EP7033-05).

6.2 Safety Considerations

There are no Integration Work Sheets (IWSs) developed specifically for packaging and shipping of environmental samples since the task is defined as work "commonly performed by the public" that requires little or no guidance or training to perform the work safely. The work is categorized as Worker Authorization Level (WAL) A, which does not require an IWS.

6.3 Determining the Classification of Samples

6.3.1 Sample Classification

A hazardous substance or material is one capable of posing an unreasonable risk to health, safety, and property when transported in commerce, and has been designated as hazardous under section 5103 of Federal hazardous materials transportation law (49 U.S.C. 5103). The term includes hazardous substances, hazardous wastes, marine pollutants, elevated temperature materials, materials designated as

hazardous in the Hazardous Materials Table (49 CFR 172.101), and materials that meet the defining criteria for hazard classes and divisions in Part 173 of that chapter.

However, these regulations were not intended to cover the shipment of small quantities (1 kg or less for single packages) or samples collected at hazardous waste sites that are transported to laboratories for testing. ORAD and ERD environmental samples do not contain concentrations or total amounts of hazardous or radioactive materials that exceed the thresholds specified in these regulations. For example, the highest concentrations of tritium (^3H) encountered at the two LLNL sites are observed at Site 300, from wells NC7-51 (~1.4 μCi/L) and NC7-63 (~2.6 μCi/L), and these are concentrations far below the Reportable Quantity (RQ) for tritium of 100 Ci (49 CFR 172.101, Appendix A). Similarly, maximum uranium concentrations (Site 300, NC7-40; ~790 pCi/L) are far below RQ limits of 0.1 Ci. The situation is repeated for organic contaminants; trichloroethene, at the highest concentration encountered in ERD sampling (Site 300, W-834-D3; ~800 ppm) is well below the RQ level of 100 lbs. Therefore, we do not consider environmental samples to ever qualify as hazardous or radioactive materials.

6.3.2 Sample Preservation

Environmental samples are not preserved with acids or bases during routine ERD or ORAD sampling. In rare circumstances, it may be necessary to preserve samples, and these procedures are summarized in SOP 4.3, "Sample Containers and Preservation." As discussed above, ERD environmental samples meet the the definition of non-hazardous materials, and are not elevated to Hazardous status when preserved with the following materials (40 CFR, Section 136.3, Table II, note #3):

- Hydrochloric acid (HCl) in water solutions at concentrations of 0.04% by weight or less (pH about 1.96 or greater).
- Nitric acid (HNO_3) in water solutions at concentrations of 0.15% by weight or less (pH about 1.62 or greater).
- Sulfuric acid (H_2SO_4) in water solutions at concentrations of 0.35% by weight or less (pH about 1.15 or greater).
- Sodium hydroxide (NaOH) in water solutions at concentrations of 0.08% by weight or less (pH about 12.30 or less).

The most recent guidance can be found in a Letter of Clarification on Hazardous Materials Regulations, date stamped Feb. 13, 2003, Ref. No.: 02-0093 (49 CFR parts 100-185). The letter confirms that when environmental samples are preserved (or even over-preserved) they are not corrosive materials subject to hazardous materials regulations (HMR).

6.3.3 Radioactive Material

In the past, DOT defined a Class 7 (radioactive) material as any material having a specific activity greater than 70 becquerels (Bq) per gram (0.002 microcuries per gram [μCi/g]). On January 26, 2004 this definition was rewritten with specific limits for different nuclides that can be found in 40 CFR 173.436; once again, ERD environmental samples are several orders of magnitude lower in activity than the

exemption thresholds that define samples or consignments of samples as radioactive.

6.4 Shipping Procedures

6.4.1 Sample Shipment

Environmental samples are not subject to the same packaging, labeling, and shipping requirements as hazardous wastes, but to assure the integrity and correct identification of the sample, the FP must:

1. Package the sample so that it does not leak, spill, break, or vaporize.

2. Assure that the following information accompanies the sample:
   - Sample collector's name, mailing address, and phone number.
   - Laboratory's name, mailing address, and telephone number.
   - Quantity of sample.
   - Date of shipment.
   - Description of sample.

These requirements are routinely met by the inclusion of the CoC documentation that accompanies samples shipped to contract analytical laboratories. Refer to SOP 4.2, "Sample Control and Documentation," Attachments A and B, to view CoCs.

The LLNL Shipping Department requires that an LLNL ShipIt Form (Attachment A) accompany all nonhazardous samples being shipped offsite or picked-up by an analytical laboratory courier for analyses at an outside contracted analytical laboratory (CAL). The ShipIt Form must be prepared in advance by the Technical Release Representative (TRR) or a person dedicated to the task of generating ShipIts. A supply of ShipIt forms should always be available at the Sample Pick-up Location. Samples will not be picked-up by the lab courier unless a ShipIt form has been completed with the corresponding CoC number accompanying the samples offsite. In turn, the ShipIt number must also be included on the CoC form. The original ShipIt Form and a copy of the form are signed by the courier. The original form remains at the Sample Pick-up Location for LLNL record retention. The courier keeps the ShipIt copy to accompany the samples offsite. The ShipIt copy does not need to be retained by the courier once the samples have been transported offsite.

6.4.2 General Packaging and Shipping Instructions

A. Review sample labels. Once the sampling event is completed, verify that all sample bottles have been correctly identified and labeled appropriately (e.g., location, time, date, etc.). Sample containers must have a completed sample identification tag as described in SOP 4.2, "Sample Control and Documentation." DOT marking and labeling is not required for environmental samples, as they fall below exemption thresholds for hazardous material definition, as described above.

B. Complete a CoC. A CoC form must accompany all sample packages sent to the laboratories on and off site. Record samples on the CoC form. The

instructions to complete this form are presented in SOP 4.2, "Sample Control and Documentation."

Note: When shipping any samples offsite via the LLNL Shipping Department or when delivering samples to an onsite lab, retain the pink copy of the triplicate CoC form or a photocopy of the electronically produced CoC and provide to DMT.

C. Packaging samples. Properly identified sample containers should be placed inside Ziploc®-type storage bags and sealed, then placed in picnic cooler-type containers. Samples to be shipped must be packed with sufficient incombustible, absorbent cushioning material to minimize the possibility of sample container breakage. Samples that require refrigeration during shipping should be packed with a sufficient number of Blue Ice packs or bagged ice cubes to keep samples preserved. Temperature blanks are to accompany all samples which require temperature preservation (4° C [degrees centigrade]). They should consist of a 250-ml poly container or equivalent filled with water. The receiving analytical laboratory should be instructed to measure these blanks to ensure sample integrity. The blanks should be requested back from the analytical laboratory to be reused. It should be noted on CoC forms (under the "Remarks" section) that a temperature blank is enclosed in the shipment. If the blank temperature exceeds 4° C ± 2° C (upon sample receipt), the receiving analytical laboratory should notify the SC or other appropriate personnel.

D. Call ahead. The FP, SC, or DC must call the analytical laboratories before shipping samples to verify that they have the capacity to analyze the samples within their hold and turnaround times. Most laboratories can better process samples when they can plan their work load and downtimes. The analytical laboratory must be notified in advance if incoming samples:

1. Require a rapid turnaround time.
2. Are suspected of having high levels of contaminants.
3. Arrive with short holding times.
4. Are being shipped in large quantities.
5. Are being sent on Fridays or before holidays.

E. Complete Shipping Forms. A completed ShipIt form with the CoC number for samples being shipped or picked-up by an analytical lab courier must accompany all samples leaving LLNL for analyses by an outside analytical laboratory.

F. Deliver samples to appropriate shipping location. Deliver samples to the Sample Pick-up Location or LLNL Shipping as described in Sections 6.4.1 through 6.4.2. LLNL Shipping must receive samples by 2:00 p.m. Samples need to be delivered to the Sample Pick-up Location for lab courier pickup; generally, the courier pickup times are 4:00–4:30 p.m. at the Livermore Site and 4:30 p.m. at Site 300. The analytical laboratory must be called in advance to arrange for special or later pickup when necessary. When samples are shipped on Friday, Saturday delivery must be specified on the LLNL Shipping Document. Receipt must be coordinated with the analytical laboratory.

7.0 QA RECORDS

7.1 Chain-of-Custody (CoC) forms

7.2 Logbooks

7.3 Shipping documents

8.0 ATTACHMENTS

Attachment A—LLNL ShipIt Form

Attachment A

LLNL ShipIt Form

ShipIt

UNIVERSITY OF CALIFORNIA
LAWRENCE LIVERMORE NATIONAL
LABORATORY

00031679

Request #: 00031679

08/28/2003 09:14:21

Ship To:

General Engineering Labs (GEL)
Sample Receiving
Sample Receiving
2040 Savage Rd.
Charleston, SC, 29414
UNITED STATES

Date Required

Material Value

$0.00

Suggested Shipment

Overnight

Pkg #	*Weight*	*Length*		*Width*		*Height*	*Type*
			X		**X**		
			X		**X**		
			X		**X**		
			X		**X**		
			X		**X**		
			X		**X**		
			X		**X**		
			X		**X**		
			X		**X**		

LLNL Environmental Restoration Division (ERD)
Standard Operating Procedure (SOP)

ERD SOP 4.5: General Equipment Decontamination—Revision: 5

AUTHOR(S):
V. Dibley, G. Howard
R. Goodrich, and E. Walter

ENVIRONMENTAL RESTORATION DIVISION
CONTROLLED COPY
_____
THIS IS A RED STAMP
ERD

APPROVALS: **Date**

Albert J Lamarre 9/5/03
Division Leader

9/3/03
Environmental Chemistry and Biology Group Leader

CONCURRENCE: **Date**

Rebecca Goodrich 8/27/03
QA Implementation Coordinator (Acting)

1.0 PURPOSE

The purpose of this SOP is to describe methods used for decontamination of field equipment that becomes potentially contaminated during field operations.

2.0 APPLICABILITY

This procedure applies to the decontamination of applicable equipment used for environmental sampling and monitoring activities, prior to, and/or after contact with soils, surface water, or ground water. This procedure is performed to prevent the potential of cross contamination. It also minimizes the possibility of exposure to field personnel from the handling of improperly decontaminated equipment. The equipment may include split spoon samplers, sampling pumps, bailers, trowels, shovels, drill bits, augers, drill rigs, or any other equipment used during field activities.

3.0 REFERENCES

3.1 U.S. Environmental Protection Agency (1987), *A Compendium of Superfund Field Operations Methods*, EPA/540/P-87/001.

3.2 Grandfield, C. H. (1989), *Guidelines for Discharges to the Sanitary-Sewer System*, Lawrence Livermore National Laboratory, Livermore, California (UCAR 10235).

3.3 NIOSH, OSHA, USCG, and EPA (1985), *Occupational Safety and Health Guidance Manual for Hazardous Waste Site Activities*, National Institute for Occupational Safety and Health (NIOSH), Occupational Safety and Health Administration (OSHA), U.S. Coast Guard (USCG), and U.S. Department of Health and Human Services, Public Health Service, Centers for Disease Control, NIOSH.

4.0 DEFINITIONS

See SOP Glossary.

5.0 RESPONSIBILITIES

5.1 Division Leader

The Division Leader's responsibility is to ensure that all activities performed by ERD at the Livermore Site and Site 300 are performed safely and comply with all pertinent regulations and procedures, and provide the necessary equipment and resources to accomplish the tasks described in this procedure.

5.2 Field Personnel

It is the responsibility of all personnel involved with sample collection or decontamination to maintain a clean working environment and to ensure that no contaminants are negligently introduced into the environment. Decontamination is performed in the same level of protective clothing as the sampling activities, unless the Site Health and Safety Plan specifies a different level of protection.

6.0 PROCEDURE

6.1 General

6.1.1 Decontamination of field equipment should occur before equipment is used if the cleanliness of equipment is unknown and after each use.

6.1.2 Before proceeding, obtain materials listed in Equipment Checklist (Attachment A). This list provides general guidance and should be modified to site-specific needs. Restock supplies as necessary.

6.1.3 Check the sampling plan to determine if equipment blank rinsate (samples) are required. See SOP 4.9, "Collection of Field QA/QC Samples," for the collection of equipment blanks when specified in the sampling plan.

6.2 Site 300 Decontamination Procedures

6.2.1 Decontamination of Tritium Contaminated Equipment

Any equipment or materials contaminated with tritium must be decontaminated in the area containing this particular contaminant using the appropriate method described in Sections 6.2.2 through Sections 6.2.4. The rinse and wash water must be contained in a drum and allowed to evaporate similar to the procedures used for purge fluids (see SOP 4.7B, "Site 300 Treatment and Disposal of Well Development and Well Purge Fluids").

6.2.2 Decontamination by Rinsing

This is normally performed when contaminant concentrations are negligible or are of a nature where detergents are not necessary. This method is particularly applicable for water soluble compounds or those of a inorganic nature. Contaminants that will not readily adsorb onto the surfaces of equipment and are easily rinsed off the equipment, fall into this category.

A. Remove any solid particles from the equipment or material.

B. Triple rinse equipment with analyte-free water.

C. Collect rinsate water and allow to evaporate.

D. If time permits, place equipment on a clean surface and allow to air dry. If equipment is needed immediately for use, ensure that the equipment has been thoroughly rinsed with analyte-free water and wiped with a chemical-free cloth or paper towel to remove excess water.

6.2.3 Decontamination by Hand Washing with Detergent

Hand washing using a detergent such as Alconox®, is performed when contamination is known or suspected to be present, and particularly when organic constituents are involved. This method applies when triple rinsing is not sufficient to remove contaminants, and steam cleaning is not necessary.

A. Acquire appropriate Personal Protective Equipment (PPE) before proceeding (i.e., gloves, safety glasses, coveralls, etc.). (See SOP 4.1, "General Instructions for Field Personnel").

B. Triple rinse with analyte-free water being careful to collect rinsate.

C. Using appropriate brush and detergent, scrub equipment until contaminants have been amply broken down.

D. Triple rinse again with analyte-free water and inspect equipment. Repeat this process as many times as necessary until equipment is visually clean.

E. Allow to air dry for 15 min or wipe dry with a clean cloth or paper towel.

F. Properly dispose of all rinsate water according to SOP 4.7B, "Treatment and Disposal of Well Development and Well-Purge Fluids," after equipment blanks are collected. Wash or appropriately discard any contaminated PPE.

Note: Rinsate containing detergents cannot be discharged to ground or storm drain!

6.2.4 Decontamination by Steam Cleaning

Steam cleaning is performed when equipment is too large to hand wash, or when high-temperature, high-pressure steam is necessary. Steam cleaning can be done at Building 843 provided: (1) it is not a vehicle or drill rig, (2) the equipment has

not come in contact with any oils or greases (O&G), and (3) the equipment has not been contaminated with radiological compounds. Drill rigs, vehicles, or equipment contaminated with O&G, must be steam cleaned at the Building 879 Motor Pool, and then taken to the process area at Route 3 "Stand pipe wash down area."

A. If the equipment has been contaminated with tritium, it must be cleaned per Section 6.2.1.

B. The steam cleaning troughs are clearly marked with signs. Keep all equipment to be decontaminated over the troughs during steam cleaning.

C. To insure the proper use of the steam cleaner, check with the Building 843 or Building 879 Supervisor for any additional instructions that may be applicable (i.e., safety, operation, maintenance, cleanup, etc.).

D. Before proceeding, ensure that tanks or troughs have adequate capacity to contain the rinse water. If steam cleaning at Building 879, ascertain that the drain is not clogged with mud or debris.

E. Steam clean all equipment, and ensure that the equipment remains clean while in transport to, or at, the field site. Plastic sheeting should be used beneath equipment stored on the ground.

Note: When the Building 843 retention troughs are nearly full, arrange sampling and analysis for metals, VOCs, O&G, and pH. Transport water to Building 833 Water Treatment Facility when appropriate.

6.2.5 Decontamination of a Portable Pump

A. Rinse pump and discharge line by spraying analyte-free water on the exterior components where contact is made with contaminated well water.

B. The pump is then inserted into a 55-gal drum containing analyte-free water and the discharge lines are purged for approximately 5 min.

C. Collect all rinsate and purge water and dispose of according to SOP 4.7B.

D. Document decontamination activities in the appropriate Document Control Logbook.

6.3 Livermore Site Decontamination Procedures

The Livermore Site does not allow evaporation of any rinsate or purge water as a method of waste reduction.

6.3.1 Decontamination of Field Equipment

A. Remove any solid particles from the equipment or material.

B. Rinse equipment with analyte-free water.

C. Collect rinsate water and dispose of per SOP 4.7A, "Treatment and Disposal of Well Development and Well-Purge Fluids."

6.3.2 Decontamination of a Portable Pump

A. Rinse pump and discharge line by spraying analyte-free water on the exterior components where contact is made with contaminated well water.

B. The pump is then inserted into a 55-gal drum containing analyte-free water and the discharge lines are purged for approximately 5 min.

C. Collect all rinsate and purge water and dispose of according to SOP 4.7A.

D. Document decontamination activities in the appropriate Document Control Logbook.

6.4 Livermore Site and Site 300 Field Post Operation

Properly dispose of expendable items that cannot be decontaminated. Contact Hazardous Waste Management if necessary.

7.0 QA RECORDS

7.1 Document Control Logbook

8.0 ATTACHMENT

Attachment A—Equipment Checklist

Attachment A

Equipment Checklist

EQUIPMENT CHECKLIST

____ Cleaning liquids such as soap and/or detergent solutions, tap water, analyte-free water

____ Chemical-free cloth or paper towels

____ Cleaning brushes

____ Cleaning containers such as plastic buckets or galvanized steel pans

____ Waste-storage containers such as drums and plastic bags

____ Steam cleaner

____ SOPs

LLNL Environmental Restoration Division (ERD)
Standard Operating Procedure (SOP)

ERD SOP 4.6: Validation and Verification of Radiological and Nonradiological Data Generated by Analytical Laboratories
Revision: 5

AUTHOR(S):
V. Dibley, P. Daley, R. Goodrich

APPROVALS: Date

Jesse Yow — 8/30/06
Division Leader

Tina M. Carlson — 5-8-06
Environmental Chemistry and Biology Group Leader

CONCURRENCE: Date

Rebecca Goodrich — 8/3/06
QA Implementation Coordinator

1.0 PURPOSE

This procedure specifies the process used by the ERD QC chemists when reviewing analytical data to ensure consistent results of a known quality so that the data user may evaluate and make judgments based on the analytical results.

2.0 APPLICABILITY

This procedure applies to the radiological and chemical data generated by analytical laboratories from the analysis of ground and surface water and soil, rock, and sediment samples that are reviewed by the Environmental Restoration Division (ERD) for the Environmental Protection Department.

3.0 REFERENCES

3.1 U.S. Environmental Protection Agency (EPA) (1994), *Contract Laboratory Program (CLP) National Functional Guidelines for Organic Data Review*, U.S. Environmental Protection Agency, Washington, D.C. 20460 (EPA-540/R-94-012).

3.2 EPA (2004), US EPA *CLP National Functional Guidelines for Inorganic Data Review* , U.S. Environmental Protection Agency, Washington, D.C. 20460 (EPA-540-R-04-004).

3.3 EPA (1987), *Data Quality Objectives For Remedial Response Activities*, Office of Emergency Response and Office of Waste Programs Enforcement, Washington, D.C., 20460.

3.4 LLNL Environmental Restoration Division (1999), *Livermore Site and Site 300 Quality Assurance Project Plan*.

3.5 Lawrence Livermore National Laboratory's (LLNL) Environmental Protection Department (EPD) and the Lawrence Berkeley National Laboratory's (LBNL) Analytical Statement of Work.

4.0 DEFINITIONS

SEE SOP Glossary.

5.0 RESPONSIBILITIES

5.1 Division Leader

The Division Leader's responsibility is to ensure that all activities performed by ERD at the Livermore Site and Site 300 are performed safely and comply with all pertinent regulations and procedures, and provide the necessary equipment and resources to accomplish the tasks described in this procedure.

5.2 Quality Control (QC) Chemists

The ERD QC Chemists are responsible for reviewing 100% of the analytical data for technical adequacy, internal consistency and quality, identifying and flagging data quality deficiencies and requesting additional information from the analytical laboratories if there are suspect data points or problematic QC results.

5.3 Activity Leader (AL)

Personnel responsible for specific tasks, e.g., writing assigned sections of compliance monitoring reports should review analytical data for internal consistency prior to inclusion of data in reports.

5.4 Data Management Team (DMT)

The DMT is responsible for decoding collocated sample identifications and electronically recording qualifier flags. Flags assigned by QC Chemists are hand entered and those flags that can be generated automatically (see Attachment B) are assigned by running a computer program. The DMT is also responsible for the disposition of the original documents received as a result of performing work activities described by this SOP.

6.0 PROCEDURE

6.1 QC Chemist Review

In order for the QC Chemist to perform data validation/verification, the analytical laboratory must provide sufficient information for the QC chemist to determine the status of the following:

A. Integrity and stability of the samples(s) analyzed.

B. Performance of the instrument(s) used for analyses.

C. Results of Internal quality control checks.

D. Identification and quantification of the analyte(s) in the sample(s) analyzed.

The information sent with the analytical results varies somewhat by laboratory. The contract analytical laboratories are contractually obligated to provide specific information as described in the ERD QAPP and analytical Statement of Work. The QC Chemists use this information to determine if the analytical results require qualification. Attachment A shows the typical flow of the QC Chemists review. Attachment B lists all the Data Qualifier Flags available including those automatically assigned by the electronic flagging program.

6.1.1 Integrity and Stability of Sample(s) Analyzed

A. Review signed Chain-of-Custody (CoC) form for each sample received to determine if the chain of custody has been broken. Sample results may need qualification if defensibility or traceability of samples cannot be determined (i.e., S or R flag).

B. Check date and time of both extraction and analysis of each sample to ensure the appropriate holding times (if applicable) are met. If the holding time has not been met (see SOP 4.3, "Sample Containers and Preservation," for holding times), the associated results should be qualified with the H flag. This is performed automatically by the electronic flagging program run by DMT. If the turn around times (TAT) specified on the CoC were not met, this information is documented on the sample invoice and in the Sampling Plan and Chain-of-Custody Tracking (SPACT) application.

C. Review the condition of sample upon receipt form to determine if the samples were damaged or compromised during shipment. Samples should arrive at the laboratory at the proper preservation temperature (see SOP 4.3 for proper preservation temperatures). Sample results may need qualification based on this review (i.e., S or R flag).

6.1.2 Performance of the Instruments(s) Used for Analysis

Analytical methodology for analyzing the samples will determine the type of instrument(s) to be used by the laboratory. The following steps are performed to demonstrate the working condition of instrument(s) during analysis:

A. Compare the reporting limits to the contract required reporting limits. If the reporting limits are elevated due to sample dilutions, the dilution factor should be checked against the concentration for appropriateness. A Data Revision Request (DRR) may be necessary if inappropriate reporting limits were reported. The D flag is automatically assigned by the electronic flagging program when dilutions are performed.

B. Identification of each instrument used for analysis to determine if QC samples were analyzed on the same instrument.

6.1.3 Internal Quality Control Checks

A. At least one method blank is analyzed in every analytical batch of samples or whenever system contamination is suspected following a high level sample. If

analytes are detected in the method blank and the same analyte is detected in samples, then the analytes in the associated samples are qualified with the B flag. Non-detects (NDs) are not qualified.

Note 1: If there are detections in the blanks, but not in the associated samples, no qualification is necessary.

B. If surrogate or tracer yield recoveries are outside method specified control limits, the associated results are qualified. QC Chemists should use professional judgement when assigning flags based on surrogate results. For example, results may not need to be qualified if surrogates are slighALy outside of control limits. The following should be considered as guidelines only:

1. If surrogate or tracer yield recoveries (%RCV) are greater than the upper control limit (UCL), then any sample detections should be flagged "IJ". NDs do not require flagging.

2. If %RCVs are less than the lower control limit (LCL), but greater than 50%, then flag positive sample results "IJ" and flag NDs "IUJ" for estimated sample quantitation limit.

3. If %RCVs are less than the LCL, and less than 50%, then flag positive sample results "IJ" and flag NDs "IR". In some cases, the acceptable control limit range will go lower than 50% (i.e., Semivolatiles), therefore best professional judgement should be used when %RCV is < LCL.

Note: When QC sample surrogates are outside specified control limits, all supporting information (i.e., MS/MSD accuracy and precision, LCS accuracy, and sample location historical data) should be considered to determine if the associated samples were affected.

C. Accuracy as percent recovery (%RCV) and precision as relative percent difference (RPD) should be determined with each batch of samples, when appropriate, as indicated by the analytical method. Accuracy is determined by the analysis of matrix spikes (MS). For nonradiological analyses, precision is determined by the analysis of matrix spike duplicates (MSDs) and expressed as RPD. For radiological analyses, precision is determined by the analysis of sample duplicates and expressed as RPD and/or relative error ratio (RER). Radiological laboratories are not required to perform MSDs due to waste disposal issues. When %RCVs, RPDs, and/or RERs are outside method specified control limits the data is qualified. The QC Chemist should try to determine if the %RCVs, RPDs, or RERs are outside acceptance limits due to matrix affects. If matrix effects are determined to have caused the failed QC, then the extent of the matrix effects should be determined. Instances where matrix effects have been determined to only affect the sample spiked (not the other samples in the batch), qualification should be limited to this sample alone. However, it may be determined that a laboratory is having systematic problems in the analysis of one or more analytes that affects all associated samples. The reviewer must use professional judgment to determine the need for qualification of unspiked analytes and samples. The following should be used as guidelines only:

1. If both the MS and MSD %RCV are outside specified control limits (either above the UCL or below the LCL), then flag sample results (both detections and NDs) "L". If only one %RCV is outside specified control limits, no flag is necessary unless no MSD exists, then flag "L.

2. If MS/MSD %RCV is less than 30%, use professional judgement to determine if matrix interference may affect the determination of the analyte in the samples and flag positives "J" and NDs with an "R".

3. If the RPD/RER is outside specified control limits (either above the UCL or below the LCL) for an analyte, then flag sample results (both positive and negative detections) "O". LCSs should be analyzed with every batch of samples. If the LCS %RCV is outside of control limits the associated results are qualified as described below.

4. If the LCS %RCV is greater than the UCL for an analyte, then flag positive sample results from the same batch "J". No flags are necessary for ND results.

5. If the LCS %RCV is less than the LCL for an analyte, then flag positive sample results from the same batch "J" and flag NDs with "R".

Note: If more than half of the compounds in the LCS are not within the required recovery criteria, then all associated data should be qualified "R".

6.1.4 Identification and Quantification of the Analyte(s) in the Sample(s) Analyzed

Field quality control samples (SOP 4.9, "Collection of Field QC Samples," describes the collection of field QC samples) may be submitted for analysis to support the determination by the QC Chemist that the detected constituents have been identified correctly.

A. Detections of analytes in equipment blanks may indicate inadequate decontamination of sampling equipment potentially leading to cross-contamination of samples. Analytes detected in both the equipment blank and associated samples should be qualified with the "F" flag.

B. Detections of analytes in field blanks may indicate contamination from the sampling container and/or the environment in which the primary sample was collected. Analytes detected in both the field blank and associated samples should be qualified with the "F" flag.

C. Detections of analytes in trip blanks may indicate sample contamination through handling, preservation, and shipping. Analytes detected in the trip blank and associated samples should be qualified with the "F" flag.

Note 1: If there are detections in the blanks, but not in the associated samples, no qualification is necessary.

Note 2: When flagging detections in samples based on detections in the blanks, the blanks themselves do not require qualification.

Note 3: The QC Chemists should use professional judgement to determine whether trip, field, or equipment blanks need to be qualified when associated QC is outside acceptance limits. In many cases the blanks

themselves do not require qualification. (i.e., when a MS/MSD %RCV is outside of limits).

D. The QC Chemist should compare the results of decoded intralaboratory collocated samples. If the results are not comparable, a DRR (see Section 6.2.2) should be initiated. It is important to contact the individual(s) affected by the suspect results immediately in case resampling is necessary. Based on the results of the DRR sample results may need to be flagged suspect (S), estimated (J), or rejected (R).

E. The QC Chemist may compare the analytical results to historical results as time permits or when data anomalies are suspected. If the data is not consistent with the historical results, the QC Chemist may initiate a DRR (see Section 6.2.2) and request that the analytical laboratory review the supporting data or reanalyze the sample. The resolution to the DRR may result in data qualification.

F. The QC Chemist periodically evaluates the output of the Site 300 Analyte Review program to identify data point outliers. As data point outliers are identified, the QC Chemists and the DMT will determine if data qualification is necessary. The QC chemist will assign the appropriate data qualifier flag(s).

6.2 Data Validation/Verification Documentation

6.2.1 Data Qualifier Flag Form

During the QC Chemists data review, the data are qualified using the Data Qualifier Flag Form (Attachment C). The QC Chemist fills out the form, and places the qualification form in the analytical results, under the case narrative when one exists. For visibility, the form should be made on yellow paper.

6.2.2 Data Revision Request (DRR)

A DRR is initiated (via email) when a problem or a question with analytical results occur that requires resolution. The laboratory should include a copy of the DRR with the revised hard copy report. The DMT receives the revised report and stamps it as “revised”. The original report is then stamped “superceded by revision.”

6.2.3 Quality Improvement Form

The Quality Improvement Form (QIF) may be necessary if an analytical error requiring a database change or a systematic laboratory problem is discovered (see Attachment A, SOP 4.12, “Quality Improvement Forms [QIFs]”).

6.2.4 Analytical Results

The QC Chemists should separate the QC and place it behind the analytical results. The CoC should be placed at the back of the QC results. The front page upper right-hand corners of the results are marked with a “V” for validated, “N” when validation cannot be performed due to missing information, or “O” if a revision is reviewed that does not change the data quality. The reviewed date should be marked under the validation status (i.e., V, N, or O) and then the reviewers' initials.

Example:

V
3/31/00
VRD

6.2.5 Sampling Plan and Chain of Custody Tracking (SPACT) Application

Once validation/verification is complete, the QC Chemist should document the review in SPACT per the following instructions:

A. Log into the SPACT application. Use the "Receive Data/QC Chemist Validation" link provided under the heading titled "COC Reception/Validation" to enter data validation information.

B. Enter the data package CoC number, document control number, or lab log number to retrieve information for data package. Once the existing information for that data package is on-screen, enter initials, validation date, validation status (Y or N), N or Y depending on whether flags are required, N or Y depending on whether the report met turnaround times, invoiced date, and any comments. If a revision is requested, then enter requestor initials, date, and reason.

6.2.6. Invoices

Invoices should accompany the reported results. The QC Chemist approves the invoice for payment by signing the invoice and indicating the date of payment in the SPACT application. Any missed holding or turnaround times or unusable data due to severe quality problems that are the fault of the laboratory, should be noted on the invoice so that the Technical Release Representative may apply any necessary penalties per the current Statement of Work requirements.

6.2.7. An electronic data qualifier flag program is ran by a DMT member to compare electronically assigned flags to flags assigned by the QC chemist. Discrepancies are investigated and reconciled by the QC Chemist.

7.0 QA RECORDS

7.1 CoC forms

7.2 Original analytical results

7.3 DRRs and QIFs

7.4 Data Qualifier Flag form

8.0 ATTACHMENTS

Attachment A—Flow of Analytical Data During Validation/Verification

Attachment B—Data Qualifier Flags

Attachment C—Data Qualifier Flag Form

Attachment A

Flow of Analytical Data During Validation/Verification

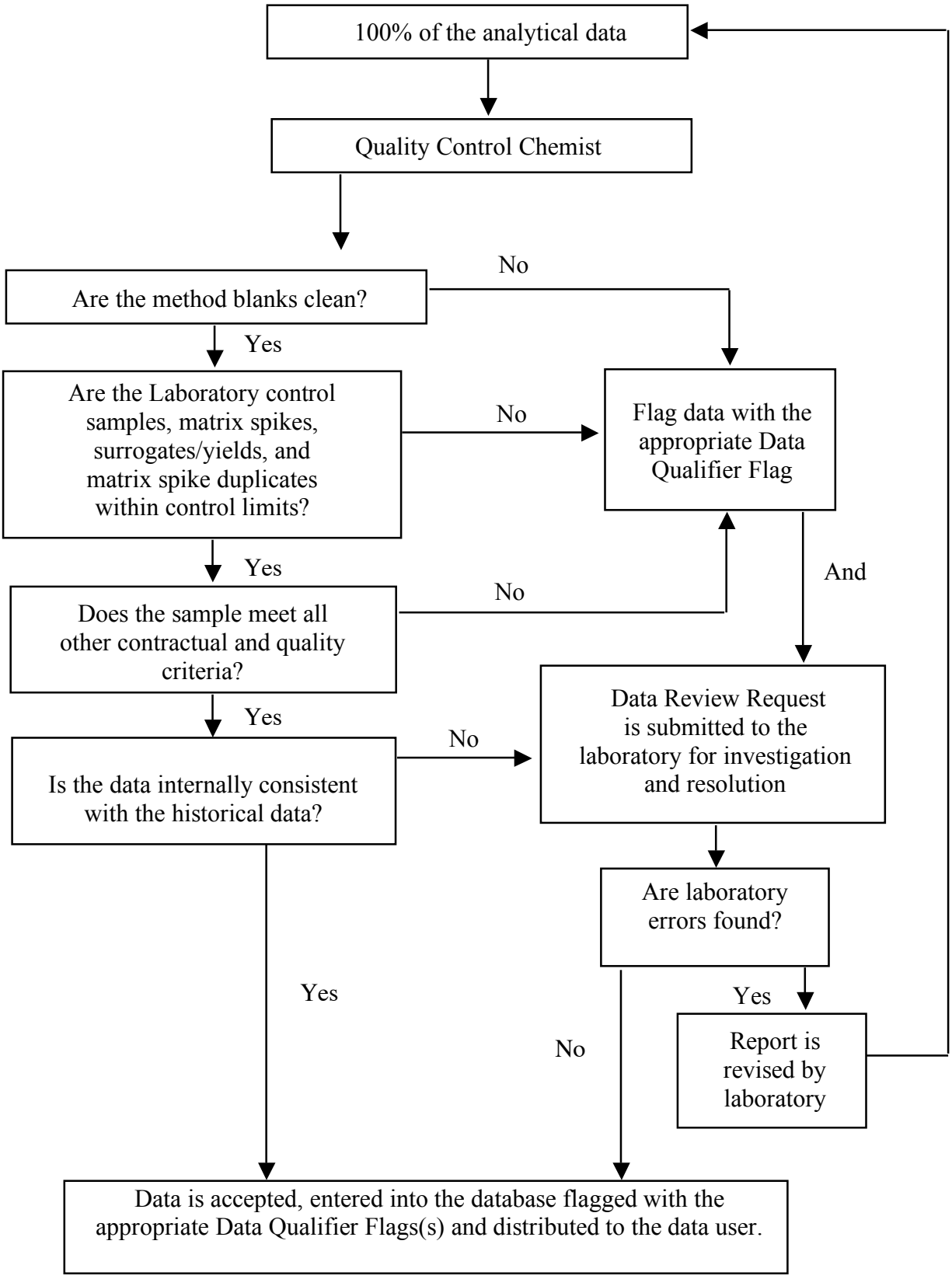

Attachment A. Flow of analytical data during validation/verification.

Attachment B

Data Qualifier Flags

List of Environmental Restoration Division Qualifier Flags

Flag	Definition
B	Analyte found in method blank, sample results should be evaluated.
D[a]	Analysis performed at a secondary dilution or concentration.
E[a]	The analyte was detected below the LLNL reporting limit, but above the analytical laboratory minimum detection limit or activity.
F	Analyte found in field blank, trip blank, or equipment blank, sample results should be evaluated.
G	Quantitated using fuel calibration, but does not match typical fuel fingerprint (fuel maybe gasoline, diesel, motor oil etc.).
H[a]	Sample analyzed outside of holding time, sample results should be evaluated.
I	Surrogate or tracer yield recoveries were outside of QC limits, sample results should be evaluated.
J	The analyte was positively identified; however, the associated numerical value is the approximate concentration or activity of the analyte in the sample.
L	Matrix spike recoveries not within control limits.
O	Matrix spike duplicate RPD, sample duplicate RPD, or RER not within control limits.
P	Indicates that the absence of a data qualifier flag does not mean that the data does not need qualification, but that the implementation of electronic data qualifier flags was not yet established.
R	Sample results are rejected due to serious deficiencies in the ability to analyze the sample and meet QC criteria. The presence or absence of the analyte cannot be verified.
S	The analytical results for this sample are suspect.
T[a]	Analyte is tentatively identified compound; result is approximate.
U[a]	Compound was analyzed for, but not detected above the detection limit.

[a] Automatically flagged in the database by the electronic qualifier flag program.

RPD = Relative Percent Difference.

RER = Relative Error Ratio.

Attachment C

Data Qualifier Flag Form

Today's Date:_____

DATA QUALIFIER FLAG FORM

Circle the appropriate qualifier flags and fill out information below.

Flag	Definition
B	Analyte found in method blank.
F	Analyte found in field blank, trip blank, or equipment blank (circle one).
G	Quantified using fuel calibration, but does not match typical fuel fingerprint.
I	Surrogate or tracer yield recoveries were outside of QC limits (circle one).
J	The analyte was positively identified; the associated numerical value is the approximate concentration of the analyte in the sample. Explain circumstances below.
L	Matrix spike recoveries not within control limits.
O	Matrix spike duplicate RPD, sample duplicate RPD, or RER not within control limits. (Circle one).
R	Sample results are rejected due to serious deficiencies in the ability to analyze the sample and meet QC criteria. The presence or absence of the analyte cannot be verified. Explain circumstances below.
S	The analytical results from this sample are suspect. Explain circumstances below.

Laboratory Code: (circle one) BB, CN, TN, GE, SE, EM or other:_____

QC Chemist Initials: RG_____Requested Analysis:_____

Analyte(s)/Code:_____

_____

_____

Explanation (check one or fill in):

[ ] Insufficient sample for spike.

[ ] _____in method blank.

[ ] Matrix interference.

[ ] LCS validates methodology.

[ ] High concentration of _____ in spiked sample.

[ ] Other/comments:_____

_____

_____

Log Number of Affected Samples:_____

_____

For Data Management Use Only:

Entered: Initials_____Date:_____

Elect. Confirmed: Initials:_____Date:_____

General Rules for Applying QA Qualifier Flags

Blanks:
IF analytes are found in the method blank, THEN flag positive results "B". IF analytes are found in the field, equipment, or trip blank, THEN flag positive sample results "F". Sample non-detects (ND) do not need to be flagged.

Surrogates:
IF surrogates percent recoveries (Surr %R) are > the upper control limit (UCL), THEN flag positive sample results "IJ". NDs do not require flags. If Surr %R are < the lower control limit (LCL), BUT are ≥ 50% of the LCL, THEN flag positive sample results "IJ" AND flag NDs "IUJ" for estimated sample quantification limit. IF Surr %R are < 50% of the LCL, THEN flag positive sample results "IJ" AND flag NDs "IR".

IF QC sample surrogates are out of control, all supporting information (e.g. MS/MSD accuracy and precision, LCS accuracy, and sample location historical data) should be considered to determine if the associated samples were affected. In some cases, the acceptable control limit range will go lower then 50% (e.g. Semi volatiles), therefore best professional judgment should be used when Surr %R is < the LCL.

Laboratory Control Spikes (LCS):
IF the LCS %R is > the UCL for an analyte, THEN flag positive sample results from the same batch "J. No flags are necessary for ND results. IF the LCS %R is < LCL for an analyte, THEN flag positive sample results from the same batch "J" AND flag NDs with "R". Also, if more than half of the compounds in the LCS are not within the required recovery criteria, then all associated data should be qualified with an "R".

Matrix Spikes and Matrix Spike Duplicates (MS/MSD):
The flags assigned to MS/MSD results are primarily to alert the user that something was not quite right with the QC batch. The data reviewer should first try to determine to what extent the results of the MS/MSD affect the associated data. The determination should be made with regard to the MS/MSD sample itself as well as specific analytes for all samples associated with the MS/MSD. In stances where it can be determined that the results of the MS/MSD affect only the sample spiked, then qualification should be limited to this sample alone. However, it may be determined that a lab is having systematic problems with the analysis of one or more analytes which affects all associated samples. The reviewer must use professional judgment to determine the need for qualification of unspiked analytes.

IF the MS %R is out of control (either above the UCL or below the LCL) for an analyte, BUT the MSD %R is within limits, THEN no flag is necessary, unless no MSD exists THEN flag "L". IF the MSD %R is out of control for an analyte, BUT the MS %R is within limits, THEN no flag is necessary. IF both the MS and MSD %R are out of control, THEN flag sample results (both positive and negative detections) "L".

IF MS/MSD %R < 30% use professional judgment to determine if matrix interference may have affected the determination of the analyte in the samples and flag positives "J" and NDs with an "R".

IF the %RPD is out of control (either above the UCL or below the LCL) for an analyte, THEN flag sample results (both positive and negative detections) "O".

Continuing Calibration Verification (CCV):
If the laboratory provides CCV values, use professional judgment when qualifying data based on CCVs. The following IF, THEN statements are provided as a guide only:
IF recovery is < LCL and sample result is ND, THEN flag with a "J". IF recovery is > UCL and sample result is ND, THEN no flag is needed. IF recovery is < LCL and sample result is positive, THEN flag with a "J". IF recovery is > UCL and sample result is positive, THEN flag with a "J". IF recovery is < LCL and sample result is ND and other QC failed, THEN flag with a "R".

LLNL Environmental Restoration Division (ERD)
Standard Operating Procedure (SOP)

ERD SOP 4.7A: Livermore Site Treatment and Disposal of Well Development and Well Purge Fluids—4

AUTHOR(S):
G. Howard

ENVIRONMENTAL RESTORATION DIVISION
CONTROLLED COPY
_____
THIS IS A RED STAMP
ERD

APPROVALS: Date

Albert L Lamarre 10/27/00
Division Leader

10/27/00
Environmental Chemistry and Biology Group Leader

CONCURRENCE: Date

10/26/00
QA Implementation Coordinator

1.0 PURPOSE

The purpose of this SOP is to ensure that investigation-derived ground water which is purged from monitor wells is properly treated and disposed of in a manner consistent with the protection of human health and the environment.

2.0 APPLICABILITY

This SOP was developed using the guidance provided by the U.S. Environmental Protection Agency (EPA) in *Guide to Management of Investigation-Derived Wastes* (EPA, 1991). This guidance states that "the management of investigation-derived wastes (IDW) must ensure protection of human health and the environment and comply with certain regulatory requirements that are applicable or relevant and appropriate (ARAR)." The guidance further states that "as a general rule, it will be necessary to use best professional judgment, in light of the site-specific conditions, to determine whether an option is protective of human health and the environment." The following SOP reflects LLNL Livermore Site's evaluation of applicable standards and its best professional judgment concerning the management of investigation-derived ground water. This procedure is applicable to the treatment and disposal of purged ground water produced by well development, aquifer testing, or ground water sampling activities. SOP 4.7B describes similar requirements for the LLNL Site 300.

3.0 REFERENCES

3.1 Site Safety Plan for Lawrence Livermore National Laboratory CERCLA Investigations.

3.2 Applicable Operational Safety Plans (OSPs), if required.

3.3 LLNL Health & Safety Manual.

3.4 U.S. Environmental Protection Agency (1987), *A Compendium of Superfund Field Operations Methods,* EPA/540/P-87/001.

3.5 U.S. Environmental Protection Agency (1991), *Guide to Management of Investigation-Derived Wastes,* U.S. EPA, Office of Solid Waste and Emergency Response, Publication 9345.3-03FS, October 1991.

3.6 Title 26, California Code of Regulations, Section 22-66699.

4.0 DEFINITIONS

See SOP Glossary.

5.0 RESPONSIBILITIES

Note: Responsibility Sections 5.1 and 5.2 are listed according to their level of authority to ensure that proper representation for all procedures and regulations related to this SOP are met.

5.1 Division Leader

The Division Leader's responsibility is to ensure that all activities performed by ERD at the Livermore Site are performed safely and comply with all pertinent regulations and procedures, and provide the necessary equipment and resources to accomplish the tasks described in this procedure.

5.2 Hydrogeology Group Leader (HGL)

The HGL's responsibility is to ensure that proper procedures are followed for activities (i.e., drilling, borehole logging and sampling, monitor well installations and development) and to oversee the disposal of all investigation derived wastes.

5.3 Environmental Chemistry and Biology Group Leader (ECBGL)

The ECBGL's responsibility is to ensure that the appropriate procedures are followed and that collection and treatment criteria are met.

5.4 Field Coordinator (FC)

The FC's responsibility is to ensure that there are adequate receptacles for the collection of purge water generated during the well development or aquifer testing.

5.5 Field Personnel

The field personnel are responsible for properly and safely following all applicable procedures. The field personnel are also responsible for notifying the Sampling Coordinator (SC) if purge water collection vessels need to be transported to and from the sampling location.

5.6 Field Support Technician (FST)

The FST's responsibility is to deliver and retrieve the appropriate collection containers to and from the sampling locations as designated by the SC. The FST will keep the SC informed of the status of all collection vessels.

5.7 Quality Control (QC) Chemist

The QC chemist is responsible for maintaining the most current Federal and State Maximum Contaminant Levels (MCLs) and Drinking Water Action Levels (DWALs), and Livermore Site discharge limits.

5.8 Sampling Coordinator (SC)

The Livermore Ground Water Monitoring SC's responsibilities are to ensure that purge water from wells containing contaminant levels exceeding discharge limits is collected and disposed of properly, direct the FST regarding the order of collector placement and retrieval at the sampling site, note the collection requirements necessary for each monitor well on the Sampling Plan or the Daily Operations Guide.

5.9 Subproject Leader (SL)

The SLs are responsible for overall planning and estimating the contaminants likely to be present.

5.10 Site Safety Officer (SSO)

The SSO's responsibility is to ensure the safety of ERD's ongoing operations and facilities and work performed. The SSO's responsibility is to reviews the details of potential hazards and procedures for all field activities. The SSO directs this information to the LLNL Hazards Control Department to determine if a new Operational Safety Plan (OSP) is required, thus assuring that an existing OSP addresses all environmental, safety, and health (ES&H) issues for each operation.

6.0 PROCEDURE

6.1 Discussion

6.1.1 According to the Environmental Protection Agency (EPA, 1991) the "EPA has not established a presumption for the management of aqueous liquid IDW (e.g., ground water). It is left to site managers to determine the most appropriate disposal options on a site specific basis. Managers should consider volume of IDW, contaminants present in the ground water and in the soil, and whether the water is a drinking water supply. In addition, wastes should be managed consistent with the final site remedy."

6.1.2 Well Development Water

The treatment and discharge methods for well development water will be based on information available at the time of development. This information will generally include saturated sediment chemistry from the screened interval and/or

nearby boreholes, ground water chemistry from near by wells screened at similar depths, and field screening using an organic vapor analyzer (OVA). If any VOCs are indicated, or if metals or tritium are expected in excess of the Livermore Site discharge limits, the water will be collected and either treated prior to discharge or delivered to LLNL's Hazardous Waste Management (HWM) for proper disposal. The QC Chemist will maintain a copy of the most recent Livermore Site discharge limits for VOCs, tritium, and metals. This list should be reviewed prior to discharging. If no data are available, the water shall be assumed to contain hazardous materials and shall be contained, sampled, and treated, if necessary in accordance with guidance from HWM.

6.1.3 Initial Monitor Well Sampling

The treatment and discharge methods for purge water from initial monitor well sampling will be determined from information available at the time of initial ground water sampling. This information will generally include saturated soil chemistry from screened interval and adjacent boreholes, ground water chemistry from near by wells screened at similar depths, a water sample collected during development, and field screening using an organic vapor analyzer (OVA). If any VOCs are indicated, or if metals or tritium are expected in excess of the Livermore Site discharge limits, the water will be either collected and treated prior to discharge, or delivered to HWM for proper disposal. If no data are available, the water shall be assumed to contain hazardous materials above the Livermore Site discharge limits and shall be contained, sampled, and treated if necessary, in accordance with guidance from HWM.

6.1.4 Routine Ground Water Sampling and Hydraulic Pump Testing

Routine water sampling is usually performed quarterly, semi-annually, or annually. Disposal of the purge water shall be based upon the most recent analytical results that are not determined to be outliers. Treatment will be performed on purge water containing concentrations expected to exceed the Livermore Site discharge limits.

6.1.5. Procedure Exceptions

In developing this SOP, every effort was made to ensure compliance with all ARARs, as required in EPA, 1991. But as recognized in EPA, 1991, it is often necessary to use best professional judgment in light of site-specific conditions. Thus, the ECBGL has the option to grant exceptions to the above purge-water handling protocol. All exceptions will be granted only after consultation with project hydrogeologists, appropriate regulatory agencies, and other appropriate professionals. Exceptions shall be granted only after the ECBGL has determined that such actions are still protective of human health and the environment.

6.2 Office Preparation

6.2.1 Prior to the start of any well development, initial ground water sampling or aquifer testing, the FC, HGL, ECBGL, SL, SC, and SSO shall exchange information such as the type and concentration of contaminants that may be encountered, quantity of purge water generated, as well as the level of personal protective equipment necessary for field personnel to safely conduct activities.

6.2.2 During the development of sampling plans and prior to the start of any routine ground water sampling activities, the SC shall review past analytical results, with an emphasis on the most recent, to determine what wells will require purge water to be collected, the amount of purge water which will be generated, and the types and concentrations of contaminants.

6.2.3 The SC will provide the field personnel and the FST with a list of wells to be sampled daily. This is called the Daily Operations Guide or DOG. This list includes the amount of water to be collected at each location and any additional instructions dealing with the eventual disposition of all water collected.

6.2.4 Prior to the start of any well development or aquifer testing activities, the FC/SL shall review the most recent analytical results, saturated sediment chemistry from the screened interval and/or nearby boreholes, ground water chemistry from near by wells screened at similar depths, and/or field screening data to estimate the contaminants likely to be present, to determine if the water needs to be contained and treated. If the water requires collection, the FC/SL shall ensure that there is adequate receptacles for the collection of purge water generated.

6.3 Field Preparation

6.3.1 The FST shall place the appropriate container for the collection of purge water immediately adjacent to and downwind of all monitor wells.

6.3.2 All ground water collection containers will be labeled "NON-POTABLE WATER."

6.3.3 Ensure that all containers have maximum fill lines clearly labeled.

6.3.4 Ensure that no sediment is present in the portable tanks.

6.4 Operation

6.4.1 Treatment and Disposal of the Purged Water

A. Drums containing collected water <u>may not</u> be left next to sampling locations after close of business.

B. All water collected in drums will be pumped into a tanker. Several wells may be composited in each tanker.

C. The FST will transport collected ground water suspected to contain VOCs above any applicable Federal or State MCLs or DWALs, or concentrations of VOCs that do not have MCLs or DWALs above detection limits, to the Livermore Site's disposal station, located at the Solar Detox staging area. The water in the tankers will be emptied at the earliest possible convenience by the FST to ensure collection space is possible for the next sampling event.

D. If the Solar Detox area is used, the tankers are then emptied into two 5,000-gal poly tanks. The FST will log the gallons of water collected, the date, and the sources (well name) into the Collection Water Logbook at the Solar Detox trailer.

E. When the 5,000-gal tanks are nearing capacity, the FC is notified and the tanks are discharged into the influent stream of Treatment Facility B (TFB). The water is treated, monitored, and discharged in accordance with TFB's NPDES permit. The Livermore Site QC Chemist will have the most recent copy of the permit discharge limits. Disposal methods for ground water containing tritium and metals are described below.

F. In the event of a change in this procedure, the SC will consult with the SLs to determine the proper means of disposal.

6.4.2 Disposal Criteria and Procedures for Ground Water Containing No Detectable Contaminant Concentrations in Eexcess of the Livermore Site Discharge Limit.

If purged ground water contains no contaminant concentrations in excess of the Livermore Site discharge limits, then discharge shall be made to an unpaved flat ground surface located at least 50 feet from arroyos, surface water drainage channels and storm drains. If necessary, use a hose to achieve adequate clearance from these drainage features.

6.4.3 Disposal Criteria and Procedures for Ground Water Containing Tritium, VOCs, and/or Metals.

If purged ground water contains tritium above 3,000 pCi/L, VOCs, and/or metals above the Livermore Site discharge limits, it must be collected and stored in a Waste Accumulation Area (WAA). The SC will consult with the SLs, ECBGL, and/or HWM, and Operations and Regulatory Affairs Division representatives to determine the proper means of disposal or storage for eventual disposal.

6.4.4 Disposal Criteria and Procedures for Ground Water Containing VOCs, but Not Tritium, Metals, or Free Product.

If purged ground water contains VOC concentrations above Livermore Site discharge limits, then pump purged ground water into containers and dispose of as described Section 6.4.1 of this SOP.

6.4.5 Disposal Criteria and Disposal Procedures for Monitor Wells that Yield Free Product.

Free product and emulsions of free product with ground water should be handled as hazardous waste and disposed of by HWM.

6.4.6 Disposal Criteria and Disposal Procedures for Monitor Wells that Yield Compounds Not Discussed in Sections 6.4.1 through 6.4.4.

Ground water that contains contaminants that have not been discussed earlier should be discharged into drums or tankers and stored appropriately in a WAA. Any additional disposal procedure for this water will be decided by the HGL or ECBGL.

6.5 Field Post Operation

6.5.1 Clean out any sediment in stripping tank, portable tanks, or containers. Sample and dispose of properly, in accordance with guidance from HWM. Inspect all drums for leaks.

6.5.2 Inventory equipment and supplies. Replace or repair all broken or damaged equipment.

6.6 Office Post Operation

6.6.1 Review field logbook and forms for completeness

6.6.2 Deliver original forms and logbook to the Document Control Officer

7.0 QA RECORDS

7.1 Collection Water Logbook

8.0 ATTACHMENTS

Not applicable.

LLNL Environmental Restoration Division (ERD)
Standard Operating Procedure (SOP)

ERD SOP 4.7B: Site 300 Treatment and Disposal of Well Development and Well Purge Fluids—Revision: 4

AUTHOR(S):
S. Gregory

ENVIRONMENTAL RESTORATION DIVISION
CONTROLLED COPY
_____
THIS IS A RED STAMP
ERD

APPROVALS: **Date**

Albert J Lamarre 5/17/02
Division Leader

Dan Lee 5/17/02
Environmental Chemistry and Biology Group Leader

CONCURRENCE: **Date**

Valerie Dibley 5/16/02
QA Implementation Coordinator

1.0 PURPOSE

The purpose of this SOP is to ensure that investigation-derived ground water which is purged from monitor wells is properly treated and disposed of in a manner consistent with the protection of human health and the environment.

2.0 APPLICABILITY

The following procedure and information is applicable to all Site 300 activities which can generate aqueous Investigation-Derived Wastes (IDW) (i.e., purged ground water produced by well development, aquifer testing, or monitor well sampling activities). The following sections describe the handling, treatment, and disposal of aqueous IDW. SOP 4.7A, "Livermore Site Treatment and Disposal of Well Development and Well Purge Fluids" describes similar requirements for the LLNL Livermore Site and SOP 1.18, "Deployment, Retrieval, Sampling and Maintenance of Instrumented Membrane Technology (IMT) Borehole-Liner Systems describes the requirements for non-aqueous IDW.

3.0 REFERENCES

3.1 Site 300 Site Safety Plan.

3.2 Operational Safety Procedures (OSPs).

3.3 LLNL Health & Safety Manual.

3.4 U.S. Environmental Protection Agency (1987), *A Compendium of Superfund Field Operations Methods*, EPA/540/P-87/001.

3.5 Crow, N. B. and A. L. Lamarre (1990), *Remedial Investigation of the High Explosives (HE) Process Area, LLNL Site 300*, Lawrence Livermore National Laboratory, Livermore, Calif. (UCID-21920).

3.6 U.S. EPA (1991), *Guide to Management of Investigation-Derived Wastes*, U.S. EPA, Office of Solid Waste and Emergency Response, Publication 9345.3-03FS, October 1991.

3.7 Title 26, California Code of Regulations, Section 22-66699.

4.0 DEFINITIONS

See SOP Glossary.

5.0 RESPONSIBILITIES

5.1 Division Leader

The Division Leader's responsibility is to ensure that all activities performed by ERD at the Livermore Site and Site 300 are performed safely and comply with all pertinent regulations and procedures, and provide the necessary equipment and resources to accomplish the tasks described in this procedure.

5.2 Environmental Chemistry and Biology Group Leader (ECBGL)

The ECBGL's responsibilities are to ensure that the appropriate procedures are followed, and that collection and treatment criteria are set.

5.3 Site 300 Engineering Group Technicians (EGTs)

The technicians are responsible for pumping the contaminated purge water from the drums into a portable tank and performing air stripping procedures.

5.4 Sampling Coordinator (SC)

The SC's responsibilities are to ensure that purge water from wells with contaminant levels exceeding discharge limits is collected and disposed of properly. The SC's responsibilities are also to arrange the delivery of collection vessels (i.e., 55-gal drums or tankers to the well sampling location) and to note the collection requirements necessary for each monitor well on the Sampling Plan, and inform the technicians when purge water needs to be pumped out of collection vessels and treated.

5.5 Sampling Field Personnel (SFP)

The SFP are responsible for properly and safely following all applicable procedures. The sampling field personnel are also responsible for notifying the SC if purge water collection vessels are not at the required location, if the lids to the 55-gal drums are missing, if the vessels are not tied down and/or if the vessels are not in good condition.

5.6 Subproject Leader (SL)

The SL is responsible for estimating the contaminants likely to be present, and ensuring that the IDW is disposed of properly to be protective of human health and the environment.

6.0 PROCEDURE

6.1 Discussion

6.1.1 According to the Environmental Protection Agency (EPA, 1991) the "EPA has not established a presumption for the management of aqueous liquid IDW (e.g., ground water). It is left to site managers to determine the most appropriate disposal options on a site specific basis. Managers should consider volume of IDW, contaminants present in the ground water and in the soil, and whether the water is a drinking water supply. In addition, wastes should be managed consistent with the final site remedy." This guidance states that "the management of IDW must ensure protection of human health and the environment and comply with certain regulatory requirements that are applicable or relevant and appropriate (ARAR)." The guidance further states that "as a general rule, it will be necessary to use best professional judgment, in light of the site-specific conditions, to determine whether an option is protective of human health and the environment."

6.1.2 At Site 300, ARARs were evaluated in determining the procedure for managing purge water. Guidance was in part supplied by the State of California Regional Water Quality Control Board—Central Valley Region (RWQCB) and was documented in three LLNL "Records of Communication" (telephone conversations) dated June 28, 1988; November 29, 1989; and February 7, 1990. This guidance stipulates that the volumes of purged ground water at Site 300 are so minor that a Waste Discharge Requirement (WDR) Permit is not required. Also, the EPA considers drinking water maximum contaminant levels (MCLs) and State environmental standards for drinking water to be the most pertinent applicable requirements for ground water. No Federal or State drinking water standards exist for HE compounds. However, discharge requirements for HE compounds were established in a National Pollutant Discharge Elimination System permit issued at another facility as discussed by Crow and Lamarre (1990). The tritium disposal criterion is set at 5% of the drinking water standard. As tritium occurs in the form of tritiated water, and thus easily moves with water, this very conservative disposal criterion assures that ERD does not increase the areal extent of tritium found at Site 300.

6.1.3 In developing this SOP, every effort was made to ensure compliance with all ARARs, as required in EPA, 1991. But as recognized in EPA, 1991, it is often necessary to use best professional judgment in light of site-specific conditions. Thus, the ECBGL has the option to grant exceptions to the above purge-water handling protocol. All exceptions will be granted only after consultation with project geologists, appropriate regulatory agencies, and other appropriate professionals. Exceptions shall be granted only after the ECBGL has determined that such actions are still protective of human health and the environment.

6.2 Preparation (SL/SC)

6.2.1 Estimate contaminants, concentrations, and quantity of waste for planning the proper disposal method of the aqueous IDW. This is performed by the SL or drilling geologist for newly drilled wells undergoing well development. For routine ground water sampling, the SC periodically updates the well contaminant concentration listed in the quarterly sampling plan and verifies that the purge water is disposed of properly by comparing the contaminant concentrations and disposal criteria (Section 6.4).

6.2.2 Arrange with the technicians to have the appropriate number of either 55-gal drums or portable collection tankers delivered to the desired location.

6.2.3 Provide a list of wells which need tankers for purge water collection to the technicians prior to the start of the sampling event. Also provide the technicians with a copy of the sampling plan which lists those wells requiring water removal from the collection vessels and treatment as described in Section 6.4.6.

6.3 Preparation (Technicians)

6.3.1 Place 55-gal drums or tankers for the collection of purge water immediately adjacent to the monitor well when requested by the SL/SC.

6.3.2 Secure the drums to a pole with a cable or chain to prevent accidental spillage. Alternately, one or two drums may be secured by wrapping the cable or chain around the stove pipe of the monitor well. Three or more drums may be secured by attaching a cable or chain around the outside of all the drums without the use of a secured pole.

6.3.3 Label all 55-gal drums “NON-POTABLE WELL DEVELOPMENT PURGE WATER.”

6.3.4. Label all portable tanks “NON-POTABLE WATER.”

6.3.5. Ensure that drums are in good condition (i.e., no leaks, etc.), portable tanks are in good working order, and use water-tight lids when necessary.

6.3.6. Cover the top of all open 55-gal drums with chicken wire to prevent rodents and other animals from entering the drum to obtain water.

6.4 Disposal of Aqueous IDW

Purged ground water that is suspected to contain detectable contaminant concentrations should be discharged directly to either dedicated and secured 55-gal drums or portable tanks. The proper analytical data set to use for evaluating purged ground water quality is dependent upon the type of field activity. For routine (quarterly) ground water sampling, the previous quarter’s analytical data should be used. The specific analyses from an

initial or nonroutine ground water sample should be used to evaluate that particular purged ground water. Composite samples should be used to evaluate ground water that is purged during well development and aquifer testing activities. For new monitor wells, the purge water should be collected in secured drums or in portable tankers until the contaminant type(s) and concentration(s) can be determined. Since the majority of wells at Site 300 are sampled using Low Volume Sampling methods, very little purge water is being generated. Only during development and baseline sampling of new wells is sufficient water generated to initiate treatment as described below. There is also a number of wells at Site 300 which are RCRA compliance monitoring locations. In these cases, multiple casing volumes may be purged prior to sample collection, necessitating collection and treatment as described below.

6.4.1 Disposal Criteria and Procedures for Ground Water Potentially Containing Tritium

A. If purged ground water contains tritium below 1,000 pCi/L, and all VOC concentrations below detection limits, then discharge purged ground water onto the ground surface in the immediate vicinity of the monitor well. Do not discharge water into any arroyo, culvert, creek, or other surface water drainage system. Discharge of purged ground water in drums to evaporate is optional.

B. If purged ground water contains tritium below 1,000 pCi/L, and detectable VOC concentrations are below any applicable Federal or State MCLs or drinking water action levels (DWALs), or concentrations of VOCs that do not have MCLs or DWALs are above detection limits, then pump purged ground water into drums (which have been secured to posts or bollards to prevent spillage), and allow to evaporate (air stripping is optional, Section 6.4.6). To prevent rainfall from potentially overfilling the drums, do not fill more than three-quarters full between September and April.

C. If purged ground water contains tritium above 1,000 pCi/L, regardless of the presence of other contaminants, then pump purged ground water into drums, and allow to evaporate. To prevent rainfall from potentially overfilling the drums, do not fill more than three-quarters full between September and April.

D. If purged ground water contains tritium below 1,000 pCi/L, and VOC concentrations above any applicable MCL or DWAL, regardless of concentrations of VOCs that do not have MCLs or DWALs, the EGT personnel must be informed by the sampling personnel or SC (according to the sampling plan) which wells require purged water to be collected for air stripping. The field personnel then pump purged ground water into drums, and seal drums with lids to prevent evaporation. Water is then pumped into a portable tank and air stripped according to Section 6.4.6 of this SOP. To prevent rainfall from potentially overfilling the drums, do not fill drums more than three-quarters full between September and April.

6.4.2 Disposal Criteria and Procedures for Ground Water Potentially Containing VOCs Not Containing High-Explosive (HE) Compounds, Tritium, or Free Product

A. If purged ground water contains no detectable contaminant concentrations, then discharge purged ground water onto the ground surface in the immediate vicinity of the monitor well. Do not discharge water into any arroyo, culvert, creek, or other surface water drainage system. To discharge purge water into drums for evaporation is optional.

B. If purged ground water contains detectable VOC concentrations below any applicable MCL or DWAL, or concentrations of VOCs that do not have MCLs or DWAL above detection limits, then discharge purged water into drums or other appropriate containers (adequately secured) to prevent accidental spillage, and allow to evaporate (air stripping is optional, Section 6.4.6). To prevent rainfall from potentially overfilling the drums, do not fill more than three-quarters full between September and April.

C. If purged ground water contains VOC concentrations above any applicable MCL or DWAL, regardless of concentrations of VOCs that do not have MCLs or DWALs, then pump purged ground water into drums and seal drums with lids to prevent evaporation. Pump water from drums into a portable tank, and air strip according to Section 6.4.6 of this SOP.

6.4.3 Disposal Criteria and Disposal Procedures for Ground Water Potentially Containing HE Compounds

A. If purged ground water contains HE concentrations below detection limits, and all VOC concentrations are below detection limits, then discharge purged ground water onto the ground surface in the immediate vicinity of the monitor well. Do not discharge water into any arroyo, culvert, creek, or other surface water drainage system. Discharge of purge water into drums for evaporation is optional.

B. If purged ground water contains HE concentrations below detection limits, and detectable VOC concentrations are below values applicable MCLs or DWALs, or concentrations of VOCs do not have MCLs or DWALs above detection limits, then discharge purged water into drums or other appropriate containers (adequately secured) to prevent accidental spillage and allow to evaporate (air stripping is optional, Section 6.4.6). To prevent rainfall from potentially overfilling the drums, do not fill more than three-quarters full between September and April.

C. If purged ground water contains HE concentrations above detection limits regardless of concentrations of other contaminants, then discharge purged water into drums or other appropriate containers (adequately secured) to prevent accidental spillage and allow to evaporate. To prevent rainfall from potentially overfilling the drums, do not fill more than three-quarters full between September and April. Periodically, check drums during summer months for residue left from evaporation. Contact Hazardous Waste Management (HWM) if residue is visible.

D. If purged ground water contains HE concentrations below detection limits, and VOC concentrations above applicable MCLs or DWALs, regardless of concentrations of VOCs that do not have MCLs or DWALs, then pump purged water into drums, and seal drums with lids to prevent evaporation. Pump water from drums into a portable tank, and air strip according to Section 6.4.6 of this SOP.

6.4.4 Disposal Criteria and Disposal Procedures for Ground Water Potentially Containing Free Product

Free product and emulsions of free product with ground water should be handled as hazardous waste and should be transported to the Livermore Site for proper disposal by the HWM Division.

6.4.5 Disposal Criteria and Disposal Procedures for Ground Water Potentially Containing Compounds Not Discussed in Sections 6.4.1 through 6.4.4.

Ground water containing contaminants not discussed earlier should be discharged into drums. Any additional disposal procedure for this water will be decided by the HGL or ECBGL.

6.4.6 Air Stripping Procedures for VOC-Contaminated Purge Water

Air stripping procedures are performed on purge water that contain only VOCs above the MCLs. This procedure is to be used by personnel familiar with the operation of the related equipment.

A. Transfer all purge water with VOC concentrations above the MCLs or DWALs to the 5,000-gal air-stripping tank, located in the Building 833 parking area (Attachment A). This tank is fitted with dedicated bubbling lines and recirculating pumps for optimal air-stripping capability. The air effluent from the tank is routed through activated carbon filters to trap the stripped VOCs.

B. Record information such as the date and quantity of water to treat in the current B833 TF document control logbook.

C. Allow the water to be bubbled and circulated for several days or until results indicate that the VOCs are below the minimum detectable limit, or ND. Refer to SOP 2.6, "Sampling for Volatile Organic Compounds" for sample collection procedures.

D. Monitor the air effluent from the carbon canisters at least once every 24 hr of operation using a calibrated organic vapor analyzer (OVA).

E. If OVA results show any breakthrough of VOCs, stop operation and replace carbon canisters.

F. Once the results from the analyses of the purge water sample show no detected concentrations of VOCs, the water may be discharged.

G. Open the external valves from the pumping system, and pump the water through the high-pressure misting towers to vaporize the water into the air.

H. Record all information in the Document Control Logbook (e.g., date, quantity of water treated, total time of air stripping, air sampling results, results of water analyses during stripping, etc.).

6.5 Field Post Operation

6.5.1 Inspect all drums and portable tankers for leaks.

6.5.2 Inventory equipment and supplies. Replace or repair all broken or damaged equipment.

6.6 Office Post Operation

6.6.1 Review field logbook and forms for completeness.

6.6.2 Deliver original forms and logbook to the Document Control Officer.

7.0 QA RECORDS

7.1 Document Control Logbook

7.2 Chain-of-Custody Forms

8.0 ATTACHMENTS

Attachment A—Schematic of Air Stripping Tank

Attachment A

Schematic of Air Stripping Tank

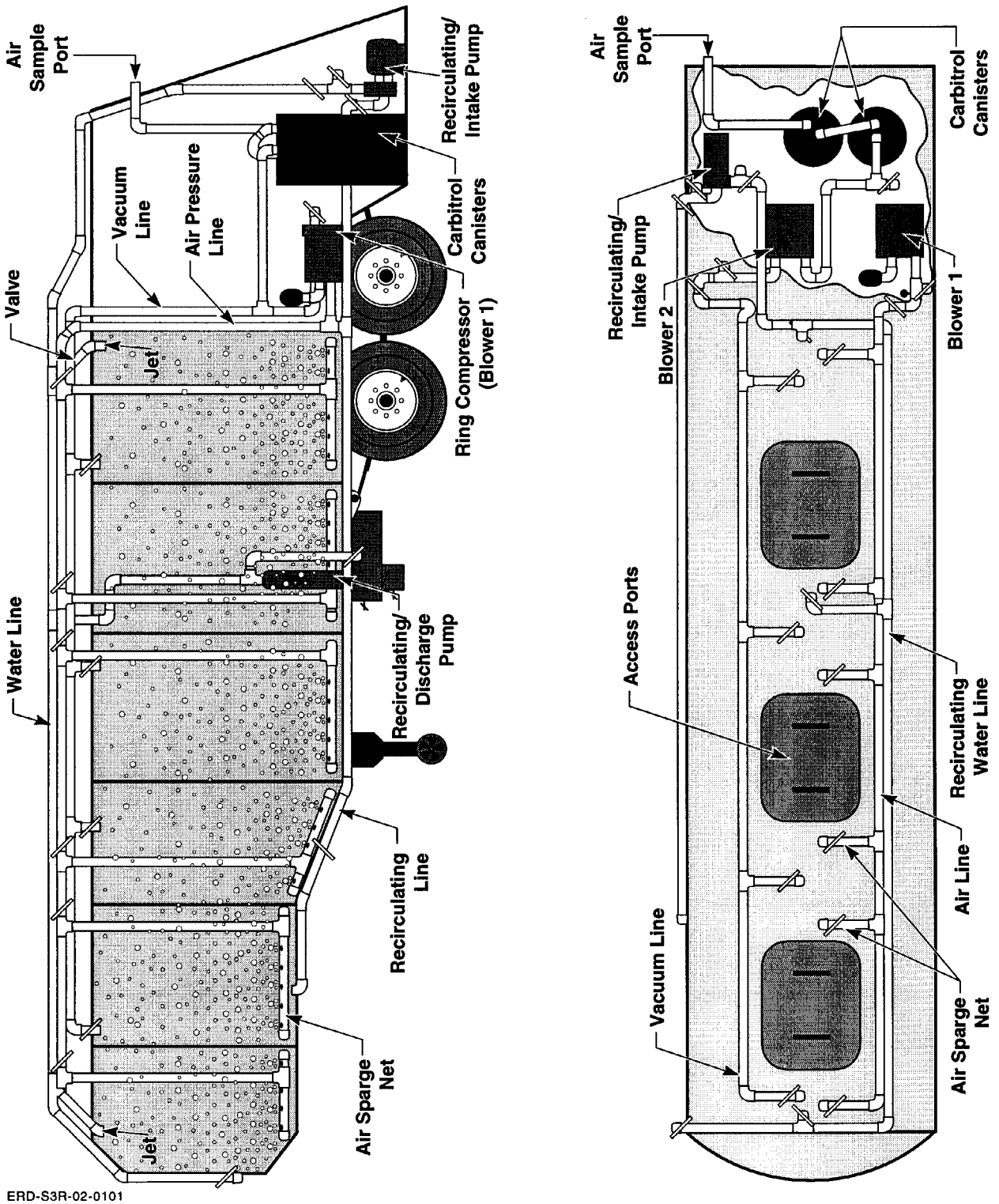

ERD-S3R-02-0101

Attachment A. Schematic of air stripping tank.

LLNL Environmental Restoration Division (ERD)
Standard Operating Procedure (SOP)

ERD SOP 4.8: Calibration/Verification and Maintenance of Measuring and Test Equipment (M&TE)—Revision: 6

AUTHOR(S):
V. Dibley and R. Goodrich

APPROVALS: **Date**

Jesse Yow — 8/30/06
Division Leader

Tricia M. Paulson — 5-8-06
Environmental Chemistry and Biology Group Leader

CONCURRENCE: **Date**

Rebecca Goodrich — 8/3/06
QA Implementation Coordinator

1.0 PURPOSE

The purpose of this SOP is to ensure accurate and consistent field chemistry, and organic vapor measurements using measuring and test equipment (M&TE) such as (1) pH meter, (2) conductivity meter, (3) dissolved oxygen meter and probe, (4) radiation survey meter, (5) organic vapor meter, and (6) explosimeter.

2.0 APPLICABILITY

This procedure is applicable to all M&TE used by ERD for the collection of field data. This procedure was developed in response to Appendix A Calibration Implementation Plan for the Safety and Environmental Protection (SEP) Directorate. This activity is a directorate level focus element scheduled for triennial assessments. Issues Tracking System (ITS) deficiencies associated with non-conformances detected during the assessment process can result in Priority 1B, 2, and 3 items. This procedure is applicable to all M&TE used by ERD for the collection of field data.

ERD work activities are conducted within the framework of the institutional Integrated Safety Management System (ISMS). The Environmental Management System (EMS) is a component

of the ISMS, which is also supported during the planning, performing, and evaluation of the work processes.

3.0 REFERENCES

3.1 ES&H Manual, Document 41.4, LLNL Program for Calibration of Critical Measuring and Test Equipment (2003), *Appendix A. Calibration Implementation Plan for the Safety and Environmental Protection Department*, Lawrence Livermore National Laboratory, Livermore, CA.

4.0 DEFINITIONS

See SOP Glossary.

5.0 RESPONSIBILITIES

5.1 Division Leader (DL)

The Division Leader's responsibility is to ensure that all activities performed by ERD at the Livermore Site and Site 300 are performed safely and comply with all pertinent regulations and procedures, and provide the necessary equipment and resources to accomplish the tasks described in this procedure.

5.2 Quality Assurance Implementation Coordinator (QAIC)

The QAIC maintains and distributes the ERD Critical M&TE spreadsheet, which is kept current as Field Personnel provide instrument calibration data to the QAIC. As new critical M&TE are added to the spreadsheet, the spreadsheet is rolled-up to the EPD QA Office.

5.3 Field Operations Manager (FOM)

The FOM ensures that field personnel have been adequately trained to operate and calibrate critical M&TE.

5.4 Sampling Coordinator (SC)

The SC ensures that field personnel have been adequately trained to operate the various meters used during sampling activities. The SC also determines calibration requirements in accordance with the manufacture's recommendations.

5.5 Field Personnel (FP)

Field personnel are responsible for the calibration, calibration verification and maintenance of the M&TE in accordance to this procedure and documented maintenance and calibration schedules. As new M&TE is purchased and as instruments are calibrated, the field personnel are responsible for informing the QAIC.

6.0 PROCEDURE

6.1 Critical and Noncritical M&TE

6.1.1 Critical M&TE is defined as:

- M&TE whose measurement accuracy is critical to the validity of programmatic results.
- M&TE whose measurement accuracy is critical to monitoring or controlling safe conditions to prevent hazards to personnel or the environment.
- M&TE used for the accountability of nuclear material.
- M&TE used to determine acceptability of the physical, mechanical, electrical, radiological, and chemical characteristics of equipment credited in safety basis documentation.
- M&TE used to calibrate critical M&TE as defined above.

6.1.2 Noncritical M&TE is any M&TE used to collect data that does not meet the critical M&TE definition.

6.1.3 ERD critical and non-critical M&TE are listed in Attachment A.

6.1.4 When new equipment is purchased, the ERD QAIC must be informed so the equipment can be added to the ERD M&TE list. The new equipment's intended use must be evaluated to determine if the M&TE is critical. An "LLNL Calibration Program" sticker must be affixed to all critical M&TE.

6.2 Preparation

Prior to conducting work, perform the applicable preparation activities described in SOP 4.1, "General Instructions for Field Personnel". Personnel who are new to the LLNL project will receive direct field supervision and on-the-job training (OJT) from a Subject Matter Expert (SME) for at least the first 24 hours using the ERD Field Investigation Orientation Lesson Plan (course number EP7033-05).

6.3 Safety Considerations

6.3.1 Operators of the critical M&TE will be trained to properly use the instruments. The FOM will acknowledge that personnel are qualified to operate the instruments by using a sign-off sheet. The sign-off sheet of qualified personnel shall be maintained in each critical M&TE instrument binder.

6.3.2 To ensure safety to the workers and the environment, the usage of critical M&TE as described in the following sections will be implemented to monitor activities conducted in accordance with the following IWSs, as applicable:

- IWS 11103: "The Validation of Hydrogen peroxide as a Gas Phase Decontaminant Using Spore Coupons".

- IWS 11341: "Ground Water and Soil Vapor Treatment Facility Operations at Site 300".
- IWS 11534: "Treatability Testing and Related Activities".

6.4 Documentation Requirements

6.4.1 Each piece of critical M&TE should have its own calibration/maintenance logbook. The instrument and serial number should be clearly identified. The following information should be documented in the calibration/maintenance logbook:

A. Date of entry and initials of the individual recording the entry.

B. Results of the calibration or calibration verification.

C. Traceability information on the standards and method used for calibration or verification, including standard preparation details.

D. Maintenance performed.

E. Operator comments.

F. The calibration or verification status (i.e., "calibrated" or "not calibrated").

6.4.2 The following information should be documented in the field sampling, drilling or treatment facility logbook so that the calibration information may be referenced:

A. Calibration, verification, or maintenance activity.

B. Date of entry.

C. Instrument name.

D. Serial number.

E. Operator comments.

6.4.3 When appropriate, calibration status shall also be indicated by placing a label on the instrument. The label should contain the calibrator's initials, calibration date, and next calibration due date.

6.4.4 Store the manufacturer's owner/operator manual with the M&TE.

6.4.5 Records and logs for active critical M&TE must be retained onsite and be available for inspection over the life of the equipment. According to requirements of the LLNL Records Retention Schedule (RRS), the calibration records on all critical M&TE used for purposes other than detection or monitoring of radiation shall be archived for twelve years.

6.5 Standard Requirements

6.5.1 Standards used for critical M&TE calibration and calibration verification shall be traceable to the National Institute of Standards and Technology (NIST) or other recognized national standards whenever possible. If NIST standards do not exist, the reference standards used should be supported by certificates, reports, or data sheets. All traceability documentation should be kept with the instruments and attached in the calibration/maintenance logbook.

6.5.2 Store standards in an appropriate place so as not to compromise integrity. If the standards do not come with storage and handling guidance to maintain the required accuracy and characteristics of the standard, the QAIC should be consulted.

6.5.3 The standards expiration date should be clearly marked. Do not use expired standards. Dispose all expired standards properly through LLNL Radioactive and Hazardous Waste Management (RHWM) Division.

6.6 Calibration Nonconformances

6.6.1 Any M&TE found damaged or malfunctioning shall be labeled as such and removed from service immediately. The condition shall be documented in the calibration/maintenance logbook and the appropriate steps shall be taken to restore the M&TE or a back-up unit shall be used.

6.6.2 If any M&TE is found to be out of calibration during the collection of measurement data, the condition shall be documented on a Quality Improvement Form (QIF). The deficiency shall be evaluated and corrective action shall be taken. The prospective users and recipients of the associated measurement data shall be notified of the results of the QIF. Acceptance of measurements made with uncalibrated M&TE needs to be reviewed by the QAIC and justification for acceptance documented. Instructions for filing a QIF can be found in SOP 4.12, "Quality Improvement Forms (QIFs)."

6.7 Choosing M&TE

6.7.1 General selection criteria for choosing M&TE are given below:

A. M&TE should be capable of attaining the appropriate range, precision, and accuracy necessary of the intended measurement. (Permits may include required criteria). M&TE range, precision, and accuracy information should be obtained from the manufacturer.

B. Instruments should be made by a well-known, reputable company. Individuals (chemists, geochemists, experienced field personnel) who have used the instrument in the past should be consulted.

C. Do not use instruments that are fragile or sensitive to water, heat, or cold. Field instruments should be rugged and constructed specifically for field work.

6.8 M&TE Calibration and Verification Procedures

6.8.1 pH Meter

pH meters require on-site calibration.

At a given temperature the intensity of the acidic or basic character of a solution is indicated by pH or hydrogen ion activity. Since pH is dependent upon temperature, all meters must have a temperature measurement and compensation mode. Otherwise, the calibration should be made at the same temperature (± 2˚C) as the samples.

A. Calibration Frequency:

The pH meter is calibrated a minimum of once a day just prior to the day's first measurement using traceable, fresh buffer solutions of pH 4, 7, or 10. Buffer solutions should have expiration dates stamped on the container. Expired buffers are not to be used.

B. Calibration Procedure:

The pH meter manufacturer's instructions will be followed when calibrating the instrument.

C. Calibration Verification:

The calibration can be accepted if the measured pH of the pH verification buffer is within one tenth (e.g., pH = 7.0 ± 0.1). The verification is performed initially after the two-point calibration.

If the measured pH falls outside that range, try one or all of the following:

1. Double check the temperature of the buffer. Although small, temperature does affect the pH of the solution. The buffer is only at pH 7.0 when it is exactly 25.0°C. An extremely hot or cold solution could make the measurement fall outside the range of acceptability. Try heating or cooling buffers to closer to 25° and recalibrate.
2. Look for indication that there is a problem with the meter or probe. Many meters have an indicator on the screen which displays when there is a potential problem.
3. Consult the trouble shooting section of the equipment manual or locate a back-up unit.
4. Replace all buffers.
5. Replace probe filling solution.

6.8.2 pH Paper

A. Calibration Frequency:

None required.

B. Calibration Procedure:

None required.

C. Calibration Verification:

Each new lot of pH paper should be checked against 3 pH buffer solutions (high, low, and medium range), to check range and accuracy of the paper. The pH paper lot check should be documented in a logbook kept for this purpose. Use appropriate range of pH paper.

6.8.3 Conductivity Meter

Conductivity is a numerical expression of the ability of an aqueous solution to transmit an electrical current. This ability depends on the presence of ions,

therefore, high conductivity will be observed when the pH is very high or very low. Conductivity is also temperature dependent, so all meters must have a temperature compensation mode. Otherwise, the calibration verification should be made at the same temperature (± 2˚C) as the samples.

A. Calibration Frequency:

Generally, conductivity meters are initially factory calibrated. If the meter has not been factory calibrated, it should be calibrated prior to each day's use. The SC determines calibration requirements to be performed by the FP based on the manufacturer's recommendation and/or input provided by the QAIC.

B. Calibration Procedure:

Calibration will be performed at the factory or as directed by the instruments operating instructions.

C. Calibration Verification:

The calibration is verified prior to each day's use per the operating instructions.

6.8.4 Dissolved Oxygen (DO) Meter

A. Calibration Frequency:

Generally, DO meters are initially factory calibrated. If the meter has not been factory calibrated, it should be calibrated prior to each day's use. The SC determines calibration requirements to be performed by the FP based on the manufacturer's recommendation and/or input provided by the QAIC.

B. Calibration Procedure:

Calibration will be performed at the factory or as directed by the instruments operating instructions.

C. Calibration Verification:

The calibration is verified prior to each day's use per the operating instructions.

6.8.5 Thermo Hydrocarbon Analyzer (THA)

THAs must be calibrated on site.

A. Calibration Frequency:

Thermo Hydrocarbon Analyzers (THAs), are to be calibrated once a day or whenever the calibration verification indicates the instrument is no longer calibrated.

B. Calibration Procedure:

Calibrate THAs using three (low, medium, and high) calibration standards that bracket the range of the instrument.

C. Calibration Verification:

Verify the day's calibration before use or when the instrument has been idle. Use a 1 mid-range calibration standard.

6.8.6 Thermo Vapor Analyzer (TVA)

A. Calibration Frequency:

The manufacturer performs calibration, instrument cleaning, and inspection annually. Submit TVA to be serviced off-site before expiration date indicated by the calibration sticker on the equipment or by the set service schedule. Do not use expired equipment.

B. Calibration Procedure:

In addition to the annual service provided by the manufacturer, TVAs should be calibrated prior to each use, or once per day. Calibrate TVAs using methane for the FID. Use an upper and lower concentration of methane gas to bracket the range of VOCs expected in the vapor stream.

C. Calibration Verification:

Verify the calibration by using a zero span gas and one methane gas standard at a concentration approximate to expected VOC concentrations of vapor stream.

6.8.7 Organic Vapor Analyzer (OVA)

A. Calibration Frequency:

Calibration frequency is every 6 months. Submit OVA for off-site calibration before expiration date indicated by the calibration sticker on the equipment. Do not use expired equipment.

B. Calibration Procedure:

OVAs are calibrated by an off-site organization.

C. Calibration Verification:

Verify the calibration before use with 1 mid-range calibration standard.

6.8.8 Explosimeters or Lower Explosive Limit (LEL) Meters

Explosimeters are used to monitor the fuel/oxygen mixture in the sampled air for LEL.

A. Calibration Frequency:

Calibration frequency is determined by Hazards Control. Calibration expiration date is indicated on the calibration sticker located on the

instrument. Return to Hazards Control before expiration date. Do not use expired equipment.

B. Calibration Procedure:

Explosimeters are calibrated and maintained by the Hazards Control Department of LLNL.

C. Calibration Verification:

None required.

6.8.9 Flow meters

Flow meters are used for general purpose routine sampling.

A. Calibration Frequency:

Flow meters are factory calibrated.

B. Calibration Procedure:

Calibration is to be performed at the factory.

C. Calibration Verification:

Flow meters should be periodically checked against a similar flow meter for accuracy and sent to the factory for re-calibration as necessary.

6.9 Maintenance

6.9.1 Maintenance is to be performed each day the M&TE is used. Perform maintenance as described in the equipment operating instructions. Maintenance may include refreshing the electrolyte solution in pH and DO probes, checking DO probe membranes for damage, replacing, or charging batteries as needed, checking operation of all instrument displays, etc.

6.9.2 Replace or repair M&TE as necessary.

6.9.3 Decontaminate M&TE per SOP 4.5, "General Equipment Decontamination."

6.9.4 Maintain M&TE storage area and store M&TE properly per manufacturer instructions to prevent damage to the M&TE.

7.0 QA RECORDS

7.1 M&TE Calibration and Maintenance Logbooks

7.2 Field Sampling Logbooks

7.3 Field Sampling Sheets

7.4 Treatment Facility Logbooks

7.5 Completed QIFs

7.6 QIF Logbook

7.7 Standard traceability documentation

8.0 ATTACHMENT

Attachment A—ERD Critical Measuring and Test Equipment List

Attachment A

ERD Critical Measuring and Test Equipment List

ERD Critical Measuring and Test Equipment-rev.08.03.06												
Item Name	DOE #	Serial # or Identifier	Model Number	Cal.Freq.	Range	Min. detec. limit	Accuracy	Responsible Individual	Owner	Location	Last Cal.Date	Next Cal. Date
Gastech Inc. LEL Meter	NA	A1674	1177	Quarterly	0-100%	NA	0.5% of range	B. Johnson	B. Kidd	B438	1/20/06	out for calib
Foxborough OVA/FID Organic Vapor Analyzer	5199134	51556	OVA 128	Semi-annual	0-10,000 ppm	0.2 ppm	20%	B. Johnson	D. White	B406	5/19/06	11/19/06
Foxborough OVA/FID Organic Vapor Analyzer		41125	OVA 128	Semi-annual	0-10,000 ppm	0.2 ppm	20%	B. Johnson	B. Kidd	B438	3/21/06	9/21/06
Thermo Hydrocarbon Analyzer	8032728	68053380297	680HVM	Prior to Use	0-10,000 ppm	0.5 ppm	10%	B. Johnson	S. Kawaguchi	B438	User calibrated	Repair required
Thermo Hydrocarbon Analyzer***	8042826	68055028305	680HVM	Prior to Use	0-10,000 ppm	0.5 ppm	10%	B. Johnson	S. Kawaguchi	B438	User calibrated	User calibrated
Thermo Hydrocarbon Analyzer***	8042833	68055029305	680HVM	Prior to Use	0-10,000 ppm	0.5 ppm	10%	B. Johnson	S. Kawaguchi	B438	User calibrated	User calibrated
Thermo Hydrocarbon Analyzer***	8041546	68055012306	680HVM	Prior to Use	0-10,000 ppm	0.5 ppm	10%	B. Johnson	S. Kawaguchi	B438	User calibrated	User calibrated
Thermo Electron Toxic Vapor Analyzer/FID	8836951	0613817263	TVA-100B-81020	Annually	0-50,000 ppm	300 ppb for hexane	25%	B. Johnson	S. Thomas	B438	5/24/06	5/24/07
Thermo Environmental Instruments Toxic Vapor Analyzer/FID	6800701	72239-370	TVA-1000B	Annually	0-50,000 ppm	300 ppb for hexane	25%	G. Santucci	L. Griffith	S300/T8726	9/28/05	9/28/06
Thermo Environmental Instruments Toxic Vapor Analyzer/FID	6800718	72241-370	TVA-1000B	Annually	0-50,000 ppm	300 ppb for hexane	25%	G. Santucci	L. Griffith	S300/T8726	8/18/05	8/18/06
Thermo Environmental Instruments Toxic Vapor Analyzer/FID	6800725	72240-370	TVA-1000B	Annually	0-50,000 ppm	300 ppb for hexane	25%	G. Santucci	L. Griffith	S300/T8726	8/24/05	8/24/06
Thermo Environmental Instruments Toxic Vapor Analyzer/FID	6806178	427208928	TVA-1000B	Annually	0-50,000 ppm	300 ppb for hexane	25%	G. Santucci	L. Griffith	S300/T8726	12/20/05	12/20/06
RKI Instruments Inc. Sample-Drawing Gas Detector Assemblies (LEL-H2)	NA	NA	35-3000RK	Quarterly	0-100%	1% LEL	1% LEL	B. Johnson	B. Kidd	CRD-1	3/1/06	5/31/06
RKI Instruments Inc. Sample-Drawing Gas Detector Assemblies (LEL-H2)	NA	P9Z003-(1-4), P03030	35-3000RK	Quarterly	0-100%	1% LEL	1% LEL	B. Johnson	B. Kidd	CRD-2	CRD-2 is currently non-operational	CRD-2 is currently non-operational
Draeger, Pac III, Single gas monitor	NA	ERtC-0650	Pac III	Semi-annual	1-20 ppm	10ppm	10%	T. Ford	M. Verce	T4352	5/15/05	out for calib
Draeger, Pac III, Single gas monitor	NA	ERTC-0651	Pac III	Semi-annual	1-20 ppm	10ppm	10%	T. Ford	M. Verce	T4352	11/15/05	5/15/06
Draeger, Pac III, Single gas monitor	NA	ERUD-0375	Pac III	Semi-annual	1-20 ppm	10ppm	10%	T. Ford	M. Verce	T4352	7/30/05	out for calib
			ERD Critical M&TE (out of service)									
Gastech Inc. LEL Meter	354	A1559	1177	Quarterly	0-100%	NA	0.5% of range	B. Johnson	J. Ulrech	B438	calibrate prior to use	calibrate prior to use
Gastech Inc. LEL Meter	231	A1678	1177	Quarterly	0-100%	NA	0.5% of range	B. Johnson	J. Ulrech	B438	calibrate prior to use	calibrate prior to use
Gastech Inc. LELO2 meter	174	B2731	1214	Quarterly	0-100%	NA	0.5% of range	B. Johnson	J. Ulrech	B438	calibrate prior to use	calibrate prior to use
Foxbrough OVA/FID Organic Vapor Analyzer	8021616	A52245	OVA 128	Semi-annual	0-10,000 ppm	0.2 ppm	20%	B. Johnson	S. Kawaguchi	B438	calibrate prior to use	calibrate prior to use
Foxbrough OVA/FID Organic Vapor Analyzer	6951687	41126	OVA 128	Semi-annual	0-10,000 ppm	0.2 ppm	20%	B. Johnson	S. Kawaguchi	B438	calibrate prior to use	calibrate prior to use
			ERD Non-critical M&TE									
Thermo Hydrocarbon Analyzer	8032858	51LT53875297	51	Prior to Use	0-10,000 ppm	0.5 ppm	0.1 ppm		S. Martins	VTF-518	NA	NA
Thermo Environmental Instruments OVM/PID Organic Vapor Monitor	NA	580U48090279	580B	Prior to Use	0-2,000 ppm	0.1 ppm	0.1 ppm		G. Santucci	B843	NA	NA
Thermo Environmental Instruments OVM/PID Organic Vapor Monitor	NA	580U38477258	580B	Prior to Use	0-2,000 ppm	0.1 ppm	0.1 ppm		G. Santucci	B843	NA	NA
Thermo Environmental Instruments OVM/PID Organic Vapor Monitor	NA	580U56161306	580B	Prior to Use	0-2,000 ppm	0.1 ppm	0.1 ppm		B. Johnson	B438	NA	NA
Thermo Environmental Instruments OVM/PID Organic Vapor Monitor	NA	56724-309	580 EZ	Prior to Use	0-2,000 ppm	0.1 ppm	0.1 ppm		J. Ulrech	T4387	NA	NA
Thermo Environmental Instruments OVM/PID Organic Vapor Monitor	NA	56725-312	580 EZ	Prior to Use	0-2,000 ppm	0.1 ppm	0.1 ppm		J. Ulrech	T4387	NA	NA
Thermo Environmental Instruments OVM/PID Organic Vapor Monitor	NA	580U3385477	580B	Prior to Use	0-2,000 ppm	0.1 ppm	0.1 ppm		J. Ulrech	T4387	NA	NA
Thermo Environmental Instruments OVM/PID Organic Vapor Monitor	NA	580U38476258	580B	Prior to Use	0-2,000 ppm	0.1 ppm	0.1 ppm		J. Ulrech	T4387	NA	NA
Thermo Environmental Instruments OVM/PID Organic Vapor Monitor	NA	580U39794261	580B	Prior to Use	0-2,000 ppm	0.1 ppm	0.1 ppm		B. Johnson	B438	NA	NA
Thermo Environmental Instruments OVM/PID Organic Vapor Monitor	NA	580U39798261	580B	Prior to Use	0-2,000 ppm	0.1 ppm	0.1 ppm		J. Ulrech	B438	NA	NA
Thermo Environmental Instruments OVM/PID Organic Vapor Monitor	NA	580U39793261	580B	Prior to Use	0-2,000 ppm	0.1 ppm	0.1 ppm		J. Ulrech	B438	NA	NA
Reason for Critical M&TE Designation												

LLNL Environmental Restoration Division (ERD)
Standard Operating Procedure (SOP)

ERD SOP 4.9: Collection of Field QC Samples—Revision: 5

AUTHOR(S):
V. Dibley

ENVIRONMENTAL RESTORATION DIVISION
CONTROLLED COPY
_____
THIS IS A RED STAMP
ERD

APPROVALS:	Date
Albert L Lamarre Division Leader	9/5/03
Dave Rice Environmental Chemistry and Biology Group Leader	8/31/03

CONCURRENCE:	Date
Rebecca Goodrich QA Implementation Coordinator (Acting)	8/29/03

1.0 PURPOSE

The purpose of this SOP is to obtain various types of Quality Control (QC) samples that provide quality control information necessary for interpretation of data.

2.0 APPLICABILITY

This procedure is applicable to the collection of QC samples during routine ground water monitoring, environmental investigations and remediation processes.

3.0 REFERENCES

3.1 U.S. Environmental Protection Agency (1981), *Manual of Groundwater Quality Sampling Procedures*, EPA-600/22-81-160, Washington, D.C.

3.2 U.S. Environmental Protection Agency (1982), *Handbook for Sampling and Preservation of Water and Wastewater,* EPA-600/4-82-029, Washington, D.C.

3.3 Weston Managers Designers/Consultants (1988), *Field Sampling Procedures Manual*, Prepared for Lawrence Livermore Laboratory.

3.4 U.S. EPA (1987), *Data Quality Objectives For Remedial Response Activities*, Office of Emergency Response and Office of Waste Programs Enforcement, Washington, DC, 20460.

3.5 Test Methods for Evaluating Solid Waste, SW-846, November 1986, Third Edition.

4.0 DEFINITIONS

See SOP Glossary.

5.0 RESPONSIBILITIES

5.1 Data Management Team (DMT)

The DMT's responsibilities are to decode the blind QC sample identification names on the printed analytical results using decoding QC sample list provided by the SC, and properly identifying the sample type and matrix in electronic storage.

5.2 Division Leader

The Division Leader's responsibility is to ensure that all activities performed by ERD at the Livermore Site and Site 300 are performed safely and comply with all pertinent regulations and procedures, and provide the necessary equipment and resources to accomplish the tasks described in this procedure.

5.3 QC Chemist

The QC chemist is responsible for determining the type(s) of analyses to be run on the various QC samples and partially responsible for determining the frequency of QC samples (i.e., field, equipment, and trip blanks).

5.4 Hydrogeology Group Leader (HGL)/ Drilling Coordinator (DC)

The HGL and DC are responsible for determining the frequency of drilling QC samples, such as equipment blanks and collocated samples in consultation with the QC chemist.

5.5 Subproject Leader (SL)

The SL is responsible for the overall investigation, planning, and assessment and remediation within a study or treatment facility area.

5.6 Sampling Coordinator (SC)

The SC's responsibilities are to generate the QC sample list and distribute the list to key individuals, including the QC Chemist, SLs, DMT, Operations and Regulatory Affairs Division/Water Guidance and Monitoring Group (WGMG) analysts and sampling technicians.

5.6 Field Personnel

The field personnel are responsible for collecting the Field QC samples as scheduled by the SC, DC, or SL.

6.0 PROCEDURE

6.1 Generation of the Quality Control Sampling List

6.1.1 The SC shall generate the QC sampling list by calculating the number of samples that need to be collected as collocated samples to meet the ERD Data Quality Objective (DQO) of 10% for all ground water sampling. The 10% is divided into 5% interlaboratory and 5% intralaboratory collocated samples. The SC chooses the installations to be used for collocated samples and field blanks at random within each geographic area. However, this list may be modified based upon past history, data anomalies, or logistical problems.

6.1.2 The SC shall distribute the QC Sampling List to key individuals listed in Section 5.4. The field personnel must compare the QC list to the sampling plan to determine when to collect the QC samples.

6.1.3 The DC shall determine the number and location of QC samples for drilling activities. As a general rule, 10% of all soil samples will be collocated as described above.

6.2 Intralaboratory Collocated Samples

Intralaboratory collocated samples are sent to the same laboratory and have the same requested analyses.

6.2.1 ERD Routine Water Samples

A. The SC selects 5% of the well locations to be sampled as Intralaboratory collocated QC samples from those wells with a history of contamination.

B. Samples are collected, one right after the other. Samples are collected as prescribed in the appropriate sampling SOP.

C. Samples are assigned a fictitious well identifier (and a different collection time from the primary sample) to blind the samples true identity to the laboratory performing the analysis, and the other is labeled with a true well identifier. The fictitious well identifiers of the QC samples usually end with "Y" or represent an unused legitimate name from a sequential series (i.e., W-181). Other fictitious well identifiers are generated as needed.

6.2.2 WGMG Water Samples

For WGMG samples, one sampling location is randomly selected quarterly by the SC or environmental analyst in each sampling network and assigned the fictitious name as shown in Table 1 for a total of 8 "blind" intralaboratory collocated QC samples. All wells, including historically clean wells, are used for the selection.

Table 1.

Intralaboratory collocated fictitious well identifier sample	Sampling network
K1-11Y	Pit 1
K7-11Y	Pit 7
W-817-11Y	Building 817 wells (HE Process Area)
K1-21Y	Pit 2
K2-11Y	Elk Ravine (Eastern and Western Firing Area)
NC5-11Y	Off-site water-supply wells
K6-11Y	Pit 6
K8-11Y	Pit 8

6.2.3 ERD Soil Samples

Intralaboratory collocated soil samples may be assigned fictitious names as described in Section 6.2.1, or they may have "DUP" at the end of the real sample identifier. When a collocated soil sample is taken from a different depth than the original sample, the original sample's depth as well as the collocated sample's depth become part of the collocated sample's ID. For example, 830-23-(26.8F)-26.3FDUP, where 26.8F is the actual depth and 26.3F is the depth of the adjoining sample for which it is collocated.

6.3 Interlaboratory Collocated Water and Soil Samples

6.3.1 For routine ground water sampling, the SC selects 5% of the well locations to be sampled as interlaboratory collocated QC samples from those wells with a history of contamination. Interlaboratory collocated samples are collected one right after the other as prescribed in the appropriate sampling SOP.

6.3.2 The samples are labeled with the true well identification and sent to two separate analytical laboratories.

6.3.3 The collocated samples are to have the same requested analyses.

6.4 Critical Wells

At Site 300, water-supply wells may be sampled as interlaboratory collocated samples in addition to the 5% interlaboratory collocated samples for QC purposes, when necessary.

6.5 Trip Blanks

6.5.1 Trip blanks are only necessary if samples are to be collected and analyzed for VOCs (volatile organic compounds). Trip blanks should be submitted for the same VOC analysis as the samples in the same ice chest. If several VOC analyses are requested, the trip blanks should be analyzed per the SC, HGL, DC, or SL. Trip blanks may also be submitted with soil samples.

6.5.2 Trip blanks (one 40 mL volatile organic analysis [VOA] per day) remain within the ice chest throughout the day's sampling activities and should be preserved to 4°C in the same manner as the samples. Each laboratory receiving samples requires a separate trip blank.

6.5.3 Write date of trip blank preparation on CoC as part of the Sample ID (i.e., Trip Blank 8-29-03). The sample date is the date the samples were collected.

6.5.4 Trip blanks should not be analyzed unless there are VOCs detected in the associated samples. This request should be written in the instructions to the lab on the CoC accompanying the samples.

Note: Inspect trip blanks for air bubbles upon receipt from the contract analytical laboratory (CAL). Trip blanks containing air bubbles should be returned to the CAL and new ones requested. Also unused trip blanks should be discarded and replaced monthly.

6.6 Field Blanks

6.6.1 Collect field blanks as indicated in the Sampling Plan. Additional field blanks should be taken if there is any reason to suspect air-borne contaminants (i.e., odors, dust, work being performed near by such as painting, fumigating, etc.). Field blanks are to be collected as described below:

A. For ERD and WGMG samples, pour the analyte-free water, provided by the analytical laboratory directly into the appropriate sample container at the sampling location and submit for the appropriate requested analyses.

Note: WGMG field blank water may be obtained from Building 151 or from the CAL.

B Label the bottle as indicated on the QC Sample list, and place in an ice chest with the samples.

C. During quarterly sampling activities, field blanks are poured at least one time per study area or sampling network at Site 300.

D. Some projects will require field blanks for all analytes listed in the sampling plan for a specific location. The sampling plan will specify the analytes the field blanks should be collected and analyzed for.

6.7 Equipment Blanks

This includes equipment used for soil and ground water sample collection, as well as pressure transducers used for hydraulic testing.

6.7.1 An equipment blank will be collected from all portable pumps used for ground water purging and sampling after decontamination.

A. Decontaminate the equipment as per SOP 4.5, "General Equipment Decontamination."

B. Place pump into a clean bucket or barrel containing DI water (source must be approved by the SC or QC Chemist), and operate pump as described in SOP 4.1, and the appropriate equipment manuals.

C. Submit the equipment blanks collected for the same analyses as the well samples, or at a minimum for the constituents of concern (COCs).

D. Collect samples from the pump in the same manner as described in SOP 2.3, "Sampling Monitor Wells with Bladder and Electric Submersible Pumps," and SOP 2.6, "Sampling for Volatile Organic Compounds."

E. Label the equipment blank collected from the portable pumping system according to the study area, type (PR for pump rinsate), and well in which the pump was used for purging and sampling (i.e., GSA-PR-W-25N-25).

6.7.2 Equipment blanks, also known as rinsate samples, are used to ensure that nondedicated equipment involved with sample collection has been adequately decontaminated.

6.7.3 Drilling equipment blanks are collected from soil sampling devices (i.e., split spoon samplers and core barrels). Auger flights will be visually inspected once they have been cleaned to verify they are free from soil particles. The frequency of these equipment blanks depends upon the past and future drilling locations, and the contaminant type and concentration in these locations. The DC and/or HGL shall determine the necessity and frequency during drilling activities. If equipment blanks are deemed necessary, follow steps A through D.

A. Decontaminate the equipment per SOP 4.5.

B. Pour enough analyte-free water (obtained from the analytical laboratory) or water approved by the DC and/or QC Chemist through or over the surface of equipment, and collect rinsate directly into appropriate containers.

C. Label the equipment blank collected from the drilling apparatus as follows:

RINSEATE-A-borehole name

RINSEATE-CB-borehole name

RINSEATE-B-borehole name

where

A = auger

CB = core barrel

B = bailer

D. Submit the equipment blanks collected for the same analyses as the soil sample.

6.8 Treatment Facility QC Samples.

Facility QC samples will be collected when specified by the SL and/or facility permits.

6.8.1 The San Joaquin RWQCB requires one field blank and one collocated sample for every 10 samples collected and analyzed. The QC samples are to be analyzed for the same parameters as the other samples collected. The collocated sample should be sent to the laboratory as the other samples (intralaboratory). Label samples as follows:

facility name - FB

facility name - dup

Other naming schemes may be used to blind the sample as approved by the DMT.

6.9 Drilling Water

Collect a sample of any water used during drilling activities and analyze for VOCs.

6.10 Drilling Mud

Collect drilling mud samples every 10 to 20 ft if high VOCs are expected.

6.11 Temperature Blanks

Temperature blanks are used to accompany all samples that require temperature preservation. They should consist of a 125-mL poly container, or equivalent, filled with water placed in the ice-chest at the beginning of the sampling event day. The receiving analytical laboratory should measure these blanks and notify the SC if the temperature exceeds 4°C ± 2°C. The temperature blank should be documented in the "Remarks" section on the CoC form.

6.12 Supplies

6.12.1 To meet ERD sampling requirements, 1-liter polyethylene or glass containers of analyte-free water used for field blanks and equipment blanks and VOA vials containing analyte-free water used for trip blanks, should be ordered from analytical laboratory.

6.12.2 Visually inspect ice chests used to refrigerate the samples. Use clean ice-chests only.

6.12.3 Load ice chests with enough bagged ice cubes or bagged Blue Ice to keep samples at 4°C.

6.13 Documentation

All sampling information should be recorded as required by the appropriate sampling or drilling SOP.

6.14 Shipping and Handling

QC samples should be handled and shipped as described in SOP 4.4.

7.0 QA RECORDS

7.1 Chain-of-Custody Forms

7.2 Document Control Logbooks

7.3 Sampling and Analysis Plans

7.4 Field Sheets

8.0 ATTACHMENTS

Not applicable.

LLNL Environmental Restoration Department (ERD)
Standard Operating Procedure (SOP)

ERD SOP 4.10: Records Management—Revision: 0

AUTHOR(S):
Rebecca Goodrich

APPROVALS: **Date**

Jim Yow — 4/16/09
Department Manager

CONCURRENCE: **Date**

[signature] — 4/16/09
Facilities & Infrastructure Assurance Manager

Rebecca Goodrich — 4/17/09
QA Implementation Coordinator

Type of Procedure (per ES&H Manual, Document 3.4)

☒ Informational Use ☐ General Use ☐ Continuous Use

1.0 PURPOSE

The purpose of this procedure is to identify the information considered to be records within the ERD and how those records are managed. The procedure also describes the process of how to access stored records, records retention schedule and final record disposition. In unison with the LLNL Records Management Policy definition, "a record is any recorded information, regardless of the type of media or format, generated in support of programmatic activities or to satisfy administrative or business needs of a directorate or department."

2.0 APPLICABILITY

This procedure applies to recorded information, in any format, that is created, received or needed to document ERD work activities. ERD information will be described in this procedure as records series, which is a collection of records or documents grouped together based on a commonality. The commonality may be subject matter or function, or as a result of the same activity; documenting a specific type of transaction, a particular physical form, or some other relationship arising out of their creation, receipt, maintenance, or use. Information that is created and managed electronically will be referred to as Electronic Record Sets in this procedure.

All ERD work activities are conducted within the framework of the institutional Integrated Safety Management System (ISMS). The Environmental Management System (EMS) is a component of the ISMS, which is also supported during the planning, performing, and evaluation of the work processes.

3.0 REFERENCES

3.1 Federal Facility Agreement Under CERCLA Section 120 between The United States Environmental Protection Agency and The United States Department of Energy and The California Department of Health Services and The California Regional Water Quality Control Board (1988).

3.2 Laguna, G. (2007), ERD Software Quality Assurance Plan.

3.3 LLNL Records Management Program (2008).

3.4 LLNL Site 300 Federal Facility Agreement Under CERCLA Section 120, United States Environmental Protection Agency Region 9 and California Department of Toxic Substances Control and The Central Valley Regional Water Quality Control Board and United States Department of Energy (1992).

4.0 DEFINITIONS

See SOP Glossary.

5.0 RESPONSIBILITIES

5.1 Department Manager (DM)

The DM's responsibility is to ensure that an effective records management system is in place to adequately document operations and programmatic activities, and to ensure the information is maintained in a manner that fosters preservation, accessibility, proper maintenance, and disposition in compliance with Laboratory Records Management or other applicable regulatory policies, procedures, and record retention schedule.

5.2 Program Leader (PL)

The PL's responsibility is to ensure that employees are aware of their records management responsibilities regarding the creation, use, maintenance, organization, preservation, and disposition of ERD records.

5.3 Data Management Team (DMT)

The DMT is responsible for the preservation, maintenance, control, and disposition of the original documents received from operations and programmatic work activities within the ERD.

5.4 Quality Assurance Implementation Coordinator (QAIC)

The ERD QAIC is responsible for maintaining a department file for QA related activities performed within the ERD, e.g., self-assessment records, quality improvement forms, and any other relevant documentation associated with the ERD QA program.

5.5 ERD Staff

It is the responsibility of every ERD staff member to generate the required documentation associated with performing certain work activities and to manage that documentation in a manner that facilitates preservation, timely retrieval, proper maintenance, and disposition.

6.0 PROCEDURES

This procedure describes the identification, creation, maintenance, retention, and disposition of records created within the ERD.

6.1. Identifying Records Series

For manageability, ERD records are grouped into "records series" which consist of like records that are grouped into categories such as CERCLA, D&D, Functional Area Management, engineering, property, finance, safety, software, and community relations information. Electronic data are managed as Electronic Data Sets and are referred to as such in this procedure.

6.1.1 Comprehensive Environmental Response, Compensation, and Liability Act (CERCLA)

The CERCLA requires that documents and correspondence used to form the basis for selection of a response action at a site be made available in the form of an Administrative Record. The requirement is found in the Federal Facility Agreement Under CERCLA Section 120 between the EPA, DOE, CDHS, and the CRWQCB (November 2, 1988).

All documentation created in support of the CERCLA projects shall be legally defensible and is therefore recorded and maintained in such a manner.

Documented CERCLA related work activities such as drilling, sampling, and hydraulic testing events are recorded in controlled, bound logbooks in accordance with SOP 5.5: Field Logbook Control or on field data sheets designed to capture information specific to a work activity.

6.1.2 Decommissioning and Demolition (D&D)

The D&D Program maintains electronic working files on the erdfilespace server.

D&D Project Management documents go to LLNL Archives after project closeout

Historical facility information is maintained in paper binder format by the Historic Information Manager.

6.1.3 Engineering

Engineering drawings, facility design, and other related documentation are stored on local desktop computers and archived on the erdfilespace server.

Engineering and Project operation meeting notes are stored electronically on ERDTwiki within the Taurus Environmental Information Management System (TEIMS).

6.1.4 Property

A hard-copy file is kept for each active piece of property assigned to the ERD Property Center. Files are maintained in numerical order, according to assigned DOE identification numbers.

Additionally, hard copy records are kept on all property transferred to another Property Center; on all property sent to DUS (Donation, Utilization and Sales), aka Excess; and on retired property (i.e., lost, stolen, cannibalized, etc.)

All files and documentation are physically located in the office of the ERD Property Center Representative.

6.1.5 Finance

Financial documents pertaining to ERD are maintained and stored in electronic format by the ERD Business Manager and Financial Analyst. LLNL financial data is maintained and stored at the institutional level as directed by the CFO Department. Several database applications are available to the ERD Finance Team to retrieve and sort financial data.

6.1.6 Safety

The ERD QAIC controls the issuance and revision of safety related documents as outlined per SOP 4.18: ERD Document Control. Controlled safety documents include Site Safety Plans for both Site 200 and Site 300, O&M manuals, and the ERD Self-help Plan. Integrated Work Sheets (IWSs) are managed electronically on an institutional database and global updates to the work sheets are made by the QAIC for ERD.

6.1.7 Functional Area Management

ERD is part of the Site Restoration Functional Area (FA). A FA Manager, and CERCLA and D&D Subject Matter Experts (SMEs) have been designated to conduct FA related work activities. Functional Area Management records are maintained on the Institutional Document Management (iDocMan) website. Records include approved Requirement Decision Records (RDRs); Functional Area Description; Gap Forms; Qualification Cards; Roles, Responsibilities, Accountabilities, and Authorities (R2A2s); and implementing mechanisms. Copies of these records are also maintained in an "evidentiary" binder.

6.1.8 Community Relations

Presentations, posters, and other community related materials are maintained on ERD's Environmental Community Relations web page, erdfilespace, and desktop computers. The URL for the web page is http://www-envirinfo.llnl.gov.

6.1.9 Personnel

Personnel records are maintained at the institutional level. Original Performance Appraisals (PAs) are maintained at the directorate level with copies being maintained by an assigned ER Department-level Administrative person. This person also tracks training requirements and completion thereof by ERD staff through the institutionally managed Livermore Training Records and Information Network (LTRAIN) system.

6.1.10 Correspondence

Correspondence relating to CERCLA, DOE, LLNS, and other activities are appropriately created and maintained by ERD staff. The Administrative Record is updated as necessary with any correspondence that supports CERCLA based decisions. The ERD's Chief Engineer and QAIC maintain Records of Communication (ROC) between ERD and the Regional Project Manager of the Regional Water Quality Control Board(s).

6.2 Electronic Record Sets

6.2.1 ERD File Share Server

ERD maintains a server where ERD electronic files are stored and shared among ERD staff members. The top-level file directories on the erdfilespace server are assigned to and managed by "czars", personnel responsible for the content, organization, and privileges for the contents of the directories.

Backup Systems

The erdfilespace server has multiple redundant backups. The data are on raid disk arrays with hot-swappable drives and automatic recovery of data when a single drive fails. There are two tape backups systems, Letago Networker and BRU (Backup Restore Utility) both of which do nightly incremental backups and monthly full backups.

Software

ERD has developed a Software Quality Assurance Plan (SQAP) to meet the intent of the LLNL Institutional Software Quality Assurance Plan (ISQAP), and for compliance with DOE Order 414.1C and NNSA QC-1. The plan provides guidelines for the ERD in the development and modification of software, or for contract or purchase of the development or modification of software. The ERD SQA Plan identifies commercial and/or LLNL developed software and the maintenance thereof and includes: the TEIMS, Remediation Modeling Support Applications, Engineering Group Applications, Programmable Logic Controller (PLC) for Hydrogen Safety at CRD2, Chain of Custody (CoC) Payment Tracking Spreadsheet, Phoenix, and EPDTwiki and other software.

Software license information is kept in a file that is read nightly by a script that automatically sends reminder emails to the "custodians" of each software package when a license nears its renewal date. The "custodians" are responsible for contacting the vendor and insuring that the license agreements are being satisfied.

6.2.2 Desktop Computers

ERD supports a variety of desktop computers – Apple/Macintosh, PC/Windows, Sun/Unix and SGI/Unix. The computers are administered by the ERD support staff and LLNL institutional support staff.

Backup Systems

The PC and Unix boxes are backed up to tape using Legato Networker with incremental backups performed nightly and full backups performed monthly. The Macintosh computers are backed up using BRU and also have backups performed

nightly and full backups performed monthly. The users are notified by email whenever their hosts are backed up. They are also sent an automatic reminder email each month to self-check that they receive the notifications.

6.3 Creating Records

6.3.1 ERD staff members are responsible for creating and properly managing the required documentation for the work activities performed.

6.3.2 Section 7.0 Quality Assurance Records of the ERD SOPs establishes a list of QA Records that are to be created as a result of performing the associated work activity.

6.4 Maintaining Records

6.4.1 ERD staff members are responsible for maintaining the required documentation for the work activities performed.

The Administrative Record and other CERCLA documentation is managed in a controlled manner by assigned ERD Staff. A designated ER Department-level Administrative person maintains the Administrative Record, which is located in T4302, R145. Only the designated person has access to the room where the Administrative Record is kept, which is controlled by a TESA key.

Drilling records and other hydrogeological records such as geophysical logging, well installation, etc. are maintained in B438, R123, which is referred to as the "Data Cave". These records are controlled by a TESA key, for which only DMT personnel have access.

Analytical data, water level field sheets, and CoCs are stored in the Data Management Records System in the same area where DMT resides. These records may be checked-out or copied by the Data Management Team for ERD staff upon request. When the materials are checked out, Data Management places orange file cards in the place of the record with the name of the ERD staff member who checked out the report and the date it was retrieved.

6.4.2 Short-term Storage

The DMT retains original records that are created in accordance with the ERD SOPs for specific work activities. These original records are stored for the short-term as part of the Data Management Records System. Copies of the original records are also maintained and disseminated as determined by the ERD SOPs.

6.4.3 Long-term

On an annual basis, ERD prepares records for storage in accordance with the guidelines set forth by the LLNL Records Management policy. Records are submitted to the Laboratory Records Center, which may be thought of as an extension to ERD's filing system. Custody of the records remains with the ERD until the retention schedule is met and then ownership and custody of records are transferred to Laboratory Archives and Research Records.

A blank transmittal form (Attachment A, Form #LL1136) is available on erdfilespace, which is used to identify records being prepared for storage. The completed form is attached to the file box and accompanies the records to the Laboratory Records Center.

Scanned copies of the completed Record Transmittal Forms are maintained in folders on erdfilespace, which provides the necessary tracking information for easy retrieval of ERD Records stored in the Laboratory Records Center in B411.

Paper copies of transmittal forms are stored in binder format in a DMT office.

6.5 Records Retention Schedule

6.5.1 In accordance with the LLNL Records Management policy, the records created within the ERD follow the requirements outlined in Schedule 10, Environmental Safety & Health. As stated in Schedule 10, these records include environmental administration, regulatory compliance, permitting & licensing, monitoring, sampling & analysis, disposal and cleanup, emergency management, and hazards control.

6.5.2 Record types include analytical data files, design review files, drilling records, environmental monitoring records, ES&H Technician Logbooks, Ground Water Sampling Records, Material Safety Data Sheets, Remediation Management and Planning Records, Standard Operating Procedures, training files, and Water Level Data Sheets.

6.7 Records Disposition

6.7.1 Disposition of records is set forth by the record type and per Schedule 10 for environmental, safety, and health. The disposition requirement differs according to the record type. For example, the Retention Instructions for SOPs is described as "Unscheduled Records: Do not destroy". Analytical Data Files are to be retained for 75 years and may be destroyed thereafter according to the Retention Schedule. Certain environmental records are considered Epidemiological (EPI) records and are governed by a moratorium. Environmental Monitoring Records

fall into this category and are considered permanent records that cannot be destroyed according to the EPI moratorium.

7.0 QA RECORDS

7.1 QA records are established in each ERD SOP for the associated work activity.

Examples of ERD QA records include: All CERCLA required documentation of sampling, water level monitoring, drilling, hydraulic testing events, analytical data reports, environmental reports, standard operating procedures, and other correspondence. Information that is created, received, or otherwise acquired during the course of conducting ERD business and work activities are to be managed as records.

8.0 ATTACHMENTS

Attachment A—Records Transmittal Form (LL1136)

Attachment A

Records Transmittal Form

RECORDS TRANSMITTAL

DEPARTMENT/DIVISION	BLDG	RM.	RECORDS MANAGEMENT USE ONLY: FOLDER NO CODE	DATE
SECTION-GROUP-PROJECT	EXT.	L-CODE	DOE MANUAL REF.	FILE UNIT CODE
PERSON TO CONTACT (Individual maintaining information on stored records)	EXT.			CUBIC FEET
DEPARTMENT HEAD OR DESIGNEE (Print or Type Name)	DATE		LLNL SCHEDULE REF.	
			TRANSFERRED TO	DATE
Department Head or Designee Signature (Required)			RETENTION PERIOD	REVIEW YEAR

TITLE OF RECORDS OR FILE UNIT

ARRANGEMENT OF RECORDS

THE RECORDS BELOW WERE RECEIVED AND ARE AVAILABLE FOR REFERENCE

(Signature of Records Center Head or Designee)

Date

INCLUSIVE DATES

CLASSIFICATION ☐ UNCLASSIFIED ☐ CLASSIFIED

BRIEF DESCRIPTION OF RECORDS

BOX NO.	INCLUSIVE CONTENTS	SEAT LOCATION	BOX NO.	INCLUSIVE CONTENTS	SEAT LOCATION

To submit this form: Place completed original Records Transmittal form in Box 1 of records to be stored.
NOTE: Each group of boxes of the same "series," "type" or year requires a form. For additional information, call the Laboratory Records Center, 3-5542.

LLNL Environmental Restoration Division (ERD)
Standard Operating Procedure (SOP)

ERD SOP 4.12: Quality Improvement Forms (QIFs)—Revision: 2

AUTHOR(S):
V. Dibley, R. Goodrich

CONCURRENCES: **Date**

Lucinda McClark 5/11/06
EPD QA Manager

Rebecca Goodrich 5/11/06
QA Implementation Coordinator

APPROVAL: **Date**

Jesse Yow 6/30/06
Division Leader

1.0 PURPOSE

The purpose of this procedure is to describe the steps ERD personnel are to take when documenting an identified nonconforming item or process or when suggesting a cost-savings or quality improvement using a Quality Improvement Form (QIF).

2.0 APPLICABILITY

This procedure is applicable to all ERD quality affecting activities. ERD work activities are conducted within the framework of the institutional Integrated Safety Management System (ISMS). The Environmental Management System (EMS) is a component of the ISMS, which is also supported during the planning, performing, and evaluation of the work processes.

3.0 REFERENCES

3.1 DOE Order 414.1C, Quality Assurance, U.S. DOE, Washington, D.C.

4.0 DEFINITIONS

See SOP Glossary.

5.0 RESPONSIBILITIES

5.1 The Division Leader

The Division Leader is responsible for fostering a "no fault" attitude to encourage the identification of nonconforming items and processes. The Division Leader is also responsible for allocating resources and resolving difficult quality issues.

5.2 Responsible Manager

The Responsible Manager is responsible for approving the QIF and ensuring the corrective actions/preventative measures are performed.

5.3 ERD Personnel

ERD personnel are responsible for identifying nonconforming items and processes, and suggesting quality improvements. All personnel have the responsibility to stop work until effective corrective action is taken.

5.4 Quality Assurance Implementing Coordinator (QAIC)

The ERD QAIC is responsible for tracking QIFs, ensuring that QIFs contain the necessary information, and verifying that QIFs are satisfactorily closed.

5.5 Responsible Individual

The responsible individual is responsible for completing the corrective action.

6.0 PROCEDURE

6.1 Reasons to Use a QIF

6.1.1. A Quality Improvement Form (QIF) (Attachment A) is used for documenting and resolving identified nonconforming items or processes. A QIF may also be used to document cost savings or quality improvement suggestions. Examples of when to use a QIF:

- Changes to data in the database requiring a paper trail.
- Broken or inadequate material received from vendors.
- Sampling errors.
- Equipment malfunction.
- Treatment facility permit violations.
- Systematic analytical laboratory problems.

- Safety concerns.

- To document the implementation of ISM Function #5, "Provide Feedback for Continuous Improvement."

6.1.2 Questions related to analytical data or suspected errors are documented by the QC Chemists using a Data Review Request (DRR) (see SOP 4.6, "Validation and Verification of Nonradiological Data," Section 6.2.2). A QIF may be necessary if a change to the database is required or if a trend is identified.

6.1.3 Consult the ERD QAIC for questions regarding the appropriateness of using a QIF.

6.2 Filing a QIF

6.2.1 A QIF may be initiated by any ERD personnel that determines the necessity of a QIF. A QIF should be completed in the following manner:

Step 1. Initiator should obtain a blank QIF from the QAIC. Fill out indicating problem/condition, underlying cause, corrective action taken, responsible individual (if known), as well as preventative measures necessary.

Step 2. Forward completed form to the QAIC.

Step 3. The QAIC will log the QIF into the QIF logbook. Each QIF entry should include a brief summary of the problem, date open, and name of Responsible Manager. The QIF identifier code is assigned (ERD-YY-XXX) by the QAIC, where YY is the current year and XXX is the next available sequential number.

Step 4. The QAIC determines the affected area and forwards the QIF to the Responsible Manager.

Step 5. The Responsible Manager reviews the QIF and may make changes or send it back to the initiator if more information is needed. Once the QIF is correct, the Responsible Manager fills in the initials box and forwards it to the QAIC.

Step 6. The QAIC will print the QIF and assign a compliance code. The compliance code choices are as follows:

001 = Equipment or system failure.

002 = Defective materials or items.

003 = Calibration deficiency.

004 = Insufficient training.

005 = Procedure noncompliance.

006 = Inadequate procedure.

007 = Documentation deficiency.

008 = Lack of document or record control.

009 = Traceability and chain-of-custody.

100 = Other items not covered above.

Step 7. The QAIC places QIF in the ERD QIF binder.

Step 8. The final QIF is uploaded to EPDdocs and distributed electronically to all of ERD.

Step 9. If the QIF is complete and the corrective action is acceptable, the QAIC will verify the action and close out the form with a signature and a closed date. If the QIF cannot be closed until a corrective action takes place the QIF will remain open until corrective action has been implemented and verified.

7.0 QA RECORDS

7.1 Completed QIFs

7.2 QIF logbook

8.0 ATTACHMENT

Attachment A—Quality Improvement Form

Attachment A

Quality Improvement Form

Quality Improvement Form

ERD Personnel should complete Section I and forward the form to the QAIC. The form should be used to document (1) cost savings suggestions, (2) quality improvement, (3) changes to the database, (4) problem resolution, (5) broken or inadequate materials are received from vendors, (6) sampling and analysis error identification and correction, (7) broken equipment/repair, (8) treatment facility permit infractions, (9) other.

Section I

Description of the problem, condition, cost savings suggestion or quality improvement:

Underlying cause:

Corrective action needed or taken:

Preventative measures:

Responsible Individual (person to take action):_____

Section II

(To be completed by the Responsible Manager)

Submitted by:_____ **Date:**_____

Responsible Manager Approval:_____

Section III

(To be filled out by the QAIC)

QAIC Concurrence:_____

Log Number:_____

Compliance Code:_____

001 – Equipment or system failure
002 – Defective materials or items
003 – Calibration deficiency
004 – Insufficient training
005 – Procedure noncompliance
006 – Inadequate procedure
007 – Documentation deficiency
008 – Lack of document or record control
009 – Traceability and chain of custody
100 – Other items not covered above

LLNL Environmental Restoration Division (ERD)
Standard Operating Procedure (SOP)

ERD SOP 4.13: Standard Operating Procedure Process—Revision 1

AUTHORS:
V. Dibley and R. Depue

APPROVALS:	Date
Jesse Yow **Division Leader**	8/30/06
Lucinda M Clark **EPD QA Manager**	05/11/06

CONCURRENCE:	Date
Rebecca Goodrich **QA Implementation Coordinator**	5/11/06

1.0 PURPOSE

The purpose of this procedure is to establish the means for preparing and revising standard operating procedures (SOPs), and to ensure that they are reviewed for adequacy and approved by the appropriate personnel. Procedures are used by ERD personnel as a training tool and reference source.

2.0 APPLICABILITY

This procedure is applicable to ERD personnel that develop ERD SOPs.

3.0 REFERENCES

3.1 LLNL Environmental Protection Department, EPD Quality Assurance Management Plan (EPD QAMP).

4.0 DEFINITIONS

See SOP Glossary.

4.0 DEFINITIONS

See SOP Glossary.

5.0 RESPONSIBILITIES

5.1 Division Leader

The Division Leader's responsibility is to ensure that all activities performed by ERD are documented in a procedure as described by this SOP. The Division Leader approves all SOPs.

5.2 Group Leader or Manager

The Group Leader or Manager who is responsible for the activity being addressed by the SOP approves the SOP and ensures that the SOP accurately reflects the processes in place and the requirements are implemented.

5.3 Reviewers

ERD Personnel assigned as Reviewers are responsible for reviewing newly developed or revised SOPs that directly impact their work activity and ensuring that the SOPs reflect the processes in place and any new requirements are implemented.

5.4 ERD Quality Assurance Implementation Coordinator (QAIC)

The QAIC is responsible for initiating and coordinating the SOP process for new SOPs and revisions. The QAIC concurs with all SOPs and controls their distribution.

5.5 Procedure Writer

ERD personnel assigned as Procedure Writer or Author are responsible for developing or revising SOPs in their area of expertise, per this SOP, involving all personnel that are directly impacted in the writing/reviewing and ensuring that the review is documented.

6.0 PROCEDURES

6.1 Initiation

Procedures are required to document all ERD processes to ensure that work is done correctly, consistently, and safely. When a new procedure is required, the QAIC initiates the SOP process by requesting that the Group Leaders identify the appropriate Procedure Writer and Key Reviewers.

6.2 Preparation

Procedures shall be prepared by the designated Procedure Writer per the requirements of this procedure.

6.3 Page Format

The front page of each procedure shall contain the following:

1. Procedure title, number, and revision.
2. Author(s).
3. Approval section which provides for signatures of the designated individuals and date, indicating approval of procedures.

6.4 Page Headings

Each subsequent page of a procedure shall have a page heading which includes the following information:

1. Procedure No.
2. Revision Number (e.g., Revision 0, Revision 1, etc.).
3. Page __ of __ (e.g., Page 1 of 10, 2 of 10, etc.).

6.5 Outline and Content

Procedures shall be divided into the following sections in the order presented:

6.5.1 Section 1.0, ***PURPOSE***

Briefly state why the procedure is being written and what activity is to be performed through the use of the procedure.

6.5.2 Section 2.0, ***APPLICABILITY***

Provide a concise description of to what or whom the procedure applies.

6.5.3 Section 3.0, ***REFERENCES***

List references. If there are no references, indicate "Not Applicable."

6.5.4 Section 4.0, ***DEFINITIONS***

Provide definitions to clarify terminology used in the procedure. Definitions will be placed in the SOP Glossary in all SOP binders.

6.5.5 Section 5.0, ***RESPONSIBILITIES***

Identify the titles and major responsibilities of the individuals or organizations responsible for implementing the requirements of the procedure.

6.5.6 Section 6.0, ***PROCEDURE***

Section 6.0 should be as concise as possible, yet with enough detail that personnel with minimal working knowledge can perform a task by following the procedure. Provide a step-by-step sequence of operations required to perform the activity in a manner that is correct, safe, and fully responsive to applicable requirements.

6.5.7 Section 7.0, ***QUALITY ASSURANCE RECORDS***

Identify the QA Records that will be generated or completed as a result of implementing the procedure.

6.5.8 Section 8.0, ***ATTACHMENTS***

Any attachments, sample forms, etc., will be labeled "Attachment" followed by an upper case alpha code. Attachments shall be listed in this section. If there are no attachments, indicate "Not applicable."

6.6 SOP Section Headings

Where necessary, SOPs shall be divided into Sections, Subsections, Sub-Subsections, and/or Sub-Sub-Subsections. Use sequential numbering (1.1, 1.1.1, 1.1.1.1, etc.) for all Section Headings (Note: Section Headings may vary per SOP). This guide will assist authors, compositors, and editors in preparing uniform ERD SOPs and is organized by the following examples:

1.0 SECTION HEADING 1—centered

Font = Century Schoolbook, Font Type = **bold**, ALL CAPS, Font Size = 12

1.1 Subsection Heading 2 (heading only)—left justified

Font = Century Schoolbook, Font Type = **bold**, Font Size = 12

1.1 Subsection Heading 2 (heading or text)—left justified

Font = Times, Font Type = plain, Font Size = 12.

1.1.1 Sub-Subsection Heading 3 (heading or text)—indent

Font = Times, Font Type = plain, Font Size = 12

1.1.1.1 Sub-Sub-Subsection Heading 4 (heading or text)—indent

Font = Times, Font Type = plain, Font Size = 12

- For numbering indented items or lists use Bullets (•); "En" Dashes (–); 1., 2., 3.; or A., B., C.

6.7 Review

Procedures, including revisions, shall be reviewed by ERD personnel whose work is directly related to the SOP. The Procedure Writer shall call a group meeting with those personnel to address their comments. The review shall be documented.

6.8 Approval

Procedures, subsequent revisions, or cancellations shall be approved by the Division Leader. The appropriate Group Leader approves these SOPs that fall in their field of expertise. SOPs that implement the requirements of the EPD QAMP do not require Group Leader approval.

6.9 Concurrence

Procedures shall be concurred to by the ERD QAIC. When an SOP implements the requirements of the EPD QAMP, the EPD Assurance Manager shall also concur.

6.10 Distribution

Procedures, including revisions, shall be assigned unique numbers by the QAIC and distributed as controlled documents.

6.11 Maintenance and Revisions

6.1 Procedures shall be reviewed at least triennially and documented by a review memorandum.

6.2 Any changes to the procedure shall constitute a revision.

6.3 Revisions to procedures shall be prepared, reviewed, approved, and distributed in the same manner as the original procedures.

7.0 QA RECORD

7.1 The original approved procedure.

7.2 Revisions.

7.3 Review meeting signature sheet.

8.0 ATTACHMENTS

Not applicable.

LLNL
Environmental Restoration Division (ERD)
Standard Operating Procedure (SOP)

ERD SOP 4.14: Mapping with the Trimble Pathfinder Pro XR GPS System

REVISION: 0	AUTHOR(S): R. Goodrich REVIEWER(S): T. Carlsen, J. Bennett*, P. Althouse
EFFECTIVE DATE: January 1999	Page 1 of 24

APPROVAL — Date 4-19-99
Albert L Lamarre
Division Leader

APPROVAL — Date 4/16/99
Environmental Chemistry and Biology Group Leader

CONCURRENCE — Date 4/16/99
QA Implementation Coordinator

*The Operations and Regulatory Affairs Division (ORAD)

1.0 PURPOSE

To describe general operating instructions for the usage of the Trimble Global Positioning System (GPS) Pathfinder Pro XR System. The GPS Pro XR is used to perform mapping or surveying type activities. Some uses of the system may include mapping of wildlife habitats, ecological preserves, archeological sites, and surveying of sampling locations.

2.0 APPLICABILITY

These guidelines provide general instructions for personnel conducting mapping or surveying projects using the Trimble GPS Pathfinder Pro XR and Pathfinder Office Software. A formal certified training class must be taken prior to using the Trimble Pathfinder Pro XR System and Pathfinder Office Software.

3.0 REFERENCES

3.1 Dana, H. Peter. (1998), The Geographer's Craft Project, Department of Geography, The University of Texas at Austin.

3.2 Trimble Navigation Limited Surveying and Mapping Division (1997), Pro XR System Training Manual

3.3 Trimble Navigation Limited (1997), Pathfinder Office Getting Started.

3.4 Trimble Navigation Ltd (1989), GPS A Guide to the Next Utility.

4.0 DEFINITIONS

See SOP Glossary.

5.0 RESPONSIBILITIES

5.1 Division Leader

The Division Leader's responsibility is to ensure that all activities performed by ERD at the Livermore Site and Site 300 are performed safely and comply with all pertinent regulations and procedures, and provide the necessary equipment and resources to accomplish the tasks described in this procedure.

5.2 Environmental Chemistry and Biology Group Leader (ECBGL)

The ECBGL's responsibility is to provide biological or chemical information and expertise (i.e., biological surveys, water supplies, chemical field instruments, etc.).

5.3 Site Safety Officer

The SSO's responsibility is to ensure the safety of ERD's ongoing operations and facilities and work performed.

6.0 PROCEDURES

6.1 Discussion

When properly operated, the GPS system is superior to former navigational systems in that, the only requirement is line of sight to the sky for accurate positioning. Precise geographic coordinates can be computed by calculating the distance from a group of satellites to a GPS receiver on earth. There are three segments to the GPS system:

6.1.1 Space Segment. The space segment of the GPS is operated by the Department of Defense (DOD). It consists of 24 operational satellites (21 space vehicles (SVs) and 3 spares). The SVs orbit the earth in 12 hours. There are six orbital planes (with four SVs in each), equally spaced (60° apart), and inclined at approximately 55° relating to the equatorial plane. These SVs send radio signals from space and

can be received by hand-held GPS receivers or rovers. At any given time there should be between five to eight available SVs from any point on earth.

6.1.2 Control Segment. The control segment consists of a system of monitoring stations located around the world. The main monitoring station is located at Schriever Air Force Base (formerly Falcon AFB) in Colorado. These stations measure signals from the SVs into orbital models for each satellite. These models compute precise orbital data (ephemeris) and SV clock corrections for each satellite. The corrected data is then uploaded to the SVs. The SVs then send subsets of the orbital ephemris data to GPS receivers over radio signals. This segment is referred to as the '"brain" of the GPS system.

6.1.3 User Segment. The user segment consists of GPS rovers and users. The GPS rover is used to receive signals from the SVs and are used to compute positions for multiple applications.

To compute position, the system is based on satellite trilateration or triangulation. A minimum of 4 satellites are needed to compute trilateration. Example: If the GPS rover measures the distance to the first satellite as 19,000 Km away, then your position is on the surface of a sphere within the radius of 19,000 Km from the satellite. A subsequent measurement is derived from a second SV which measures your position. Your position on earth is narrowed to the ellipse created by the intersection of the two spheres. A third measurement is the intersection of the three spheres, which narrows your position down to two points. A fourth measurement, which is based on time becomes the deciding factor between the two points which determines the GPS position.

To measure the distance to a satellite from our position on earth, we need to know how long a radio signal takes to reach us from that satellite. The GPS receiver determines when the signal left the satellite. This is accomplished by using pseudo-random code (PRC) that is generated at the same time in both the receiver and satellite. The GPS signal travels at the speed of light. The equation used to compute distance is: travel time (sec) x the speed of light (300,000 km or 186,000 mi/sec) = distance (km or mi).

The GPS signals are purposely scrambled by the government, which is referred to as selective availability. Other natural occurring phenomenon, such as atmospheric delay, multi-path error and receiver noise add inaccuracy to the computed position. Most errors can be recognized and easily corrected during the post-processing phase of the data.

6.2 Office Preparation

All personnel conducting mapping or surveying activities using the Pro XR GPS System must participate in a certified training course provided by the Trimble Navigation Surveying & Mapping Training Department prior to using the instrumentation.

6.2.1 Pre-mission Planning. Perform a field reconnaissance of the area projected for mapping. Schedule mapping sessions when satellite availability are optimal to help ensure accuracy of field data. Trimble's SatView website can be used to determine the availability of satellites at any given time of day. The website

address is: http://www.trimble.com/satview/. Take note, Greenwich Mean Time (GMT) is used in SatView and must be converted to the Pacific Standard Time Zone (PST), which is 8 hours earlier to properly plan your field session.

6.2.2 GPS Hardware/Software Configuration. Become familiar with the GPS before using it during an actual mapping session. Use Attachment A "Equipment Checklist" to check for all necessary GPS components prior to use. Refer to Attachment B, "**GPS Hardware Configuration**" and Attachment C, "Introduction to Asset Surveyor Software" to familiarize yourself with the equipment.

6.2.3 Data Dictionary. Create a data dictionary using Pathfinder Office software (refer to instruction manual) for the specific project being mapped. In order to efficiently create a usable data dictionary some forethought must be given. Determine the features that you plan to map. Generate a list of point, line, and area features to be included in the data dictionary, then create a list of attributes and attribute values. Each feature should be uniquely identified, so that it can be independently labeled on the final map projection. Hint: You may want to include an 'other' attribute for every feature, since the data dictionary cannot be edited in the field. When satisfied with the data dictionary, connect the Trimble cable (see Attach A for cable number) to the PC and the GPS rover to transfer a data file. To transfer a file, you must do the following:

1. On the GPS rover select **File Transfer**, and press **Enter**.

2. Select **Utilities/Data Transfer** in Pathfinder Office.

3. In the **Data Transfer** box select **Data Dictionary** as the file type, **send** and **transfer** the dictionary to the GPS rover.

6.2.4 Configuring the Pro XR Rover Receiver. There are three types of settings when configuring the Rover: Critical, Non-Critical and Display. Critical settings must be configured prior to data capture. These are quality affective settings. Non-critical settings affect the behavior of the ASPEN software, but do not affect the usability of the GPS positions. Display settings are only used to create a more user friendly system, but are not quality effecting. Refer to Attachment D, "Configuring Rover Options" to properly configure the GPS rover receiver according to the manufacturer's instructions.

6.3 Field Preparation

6.3.1 Preparation for Data Capture. If working at Site 300 schedule access arrangements with the appropriate building coordinators before going to the field. Prior to the GPS data capture session make sure all batteries are fully charged. It is beneficial to conduct a mock mapping session before using the instrument to do your actual mapping project. This helps you to become familiar with equipment set-up and possibly trigger questions that you'll need answered before the final data capture session.

6.4 Operation

6.4.1 Data Capture. After configuring the GPS rover and proper field preparation has been made, you are ready to conduct a mapping or surveying session in the field. A file name will automatically be given to your data capture session when you create a new data file. The naming convention used is R032120A, in which the R identifies the file as a rover file, MM (Month), DD (Day), HH (Universal Coordinated Time (UTC) time by default)), x (counter-increases a, b, c, within the hr.). Before creating a new data file, verify that you have a current position fix. To do this, refer to Attachment E, "Data Capture". If the top line reads OLD POSITION do not begin data capture. Wait until a current position is displayed. During the field mapping session, if there is a nearby location that has been surveyed, collect a GPS point at this location. This will make it easier to match data points if the GPS field data are overlaid onto other map projections.

Tip: A rover file that is over 1 week old cannot be appended to. It is important to plan your mapping project, so that it can be completed in one session, if possible. Also, rover files that are over two months old cannot be post processed. The base files are not archived past two months.

6.5 Post Field Operation

6.5.1 Post-Processing in Pathfinder Office

A formal certified training class must be taken prior to using the Trimble Pathfinder Pro XR System and Pathfinder Office Software. Please refer to the ProXR instruction manual or the Pathfinder Office, software manual for detailed operating instructions.

Pathfinder Office software is used to transfer, correct, display, edit, plot and export your data. Please refer to the instruction manual to properly configure Pathfinder Office. Once the application has been configured, field data from the GPS Rover may be transferred to Pathfinder Office. To transfer a file you must do the following:

1. Select **File Transfer** on the datalogger and press **enter**.

2. Select **Utilities/Data Transfer** in Pathfinder office.

Tip: It should only take a few seconds for Pathfinder Office to connect to the datalogger. If it takes longer, check the cable to make sure it's properly connected to the PC and the datalogger. Once the connection has been made, continue using the Pathfinder Office menu:

3. In the **Data Type** box, select **Data.**

4. In the **Direction** field, select **receive**.

5. Select *.* as the file type.

6. In the **Available Files** box double click on the file you want to download or select a file(s) and click **Add**.

7. Click **transfer.**

7. Click **close** to exit Data Transfer.

6.5.2 Pathfinder Office Differential Correction

GPS data are captured in the field. Base data is stored at the base station. The two data sets are loaded into Pathfinder Office where corrections are processed.

1. Select **Utilities/Differential Correction.**

2. Click **browse** in the **Rover Files** box.

3. Select the rover file and click **OK**.

4. Click **Auto Select** in the **Base Files** box.

Tip: To use Auto Select, the base files must be in the C:\PFDATA\<PROJECT NAME>\BASE directory. If Pathfinder Office is not configured to use Auto Select, then download basemap data files from the Internet. The website address is ftp://ftp.trimble.com/pub/cbsfiles/. Find the basefile collected at the same time as the rover file, then download.

5. Click **OK** to run the differential correction. The **Differential Correction Completed** box highlights success or failure of the differential correction.

6. If 100% of the positions did not correct click **More Details** to find out why.

7. Select **File/Exit**.

8. Click **Close**.

6.5.3 Pathfinder Office Data Display

To view the corrected data file as a map:

1. Click **File/Open** and select a *.COR file.

2. Select **View/Map** to visually display the data.

6.5.4 Pathfinder Office Data Editing

The data editing feature provides the capability to delete unwanted GPS positions.

1. Select **Data/Query Position**.

2. In the **Map Display** click on a GPS position.

3. In the **Query Position** box click **Delete**. If a mistake is made select **Undelete**.

Unwanted features and attributes may be deleted in the same manner as unwanted GPS positions.

Data may be exported into many formats, i.e., ARC/INFO, ASCII, AutoCAD DXF, Generic Database. Please refer to the instruction manual for data export.

7.0 QUALITY ASSURANCE RECORDS

7.1 Electronic data file

7.2 Spatial data display

8.0 ATTACHMENTS

Attachment A—Equipment Checklist

Attachment B—Turning the GPS Rover On & Off

Attachment C—Introduction to Asset Surveyor Software

Attachment D—Configuring Rover Options

Attachment E—Data Capture

Attachment A

Equipment Checklist

Equipment Checklist

_____ Range Poles

_____ Integrated GPS/Beacon antenna

_____ Antenna cable

_____ Integrated GPS/Beacon receiver (8 or 12 channel)

_____ TDC1 or TDC2 multiport cable

_____ Datalogger, TDC1 or TDC2

_____ System battery - two 12V 2.3A camcorder batteries

_____ Drinking Water

_____ Hat

_____ Snake Guards

_____ Radio

_____ Trimble Cable (27997 REV B, DCA 9817) for Data Transfer

Attachment B

GPS Hardware Configuration

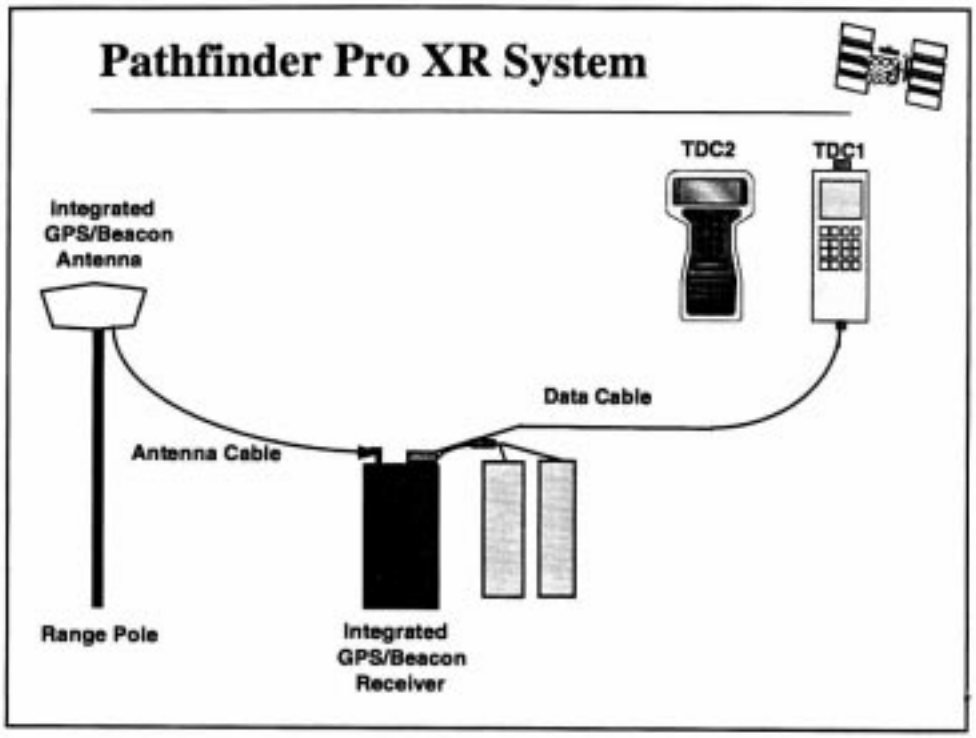

1. Connecting the System

A. The Pro XR

Equipment needed:

- Range poles
- Integrated GPS/Beacon antenna
- Antenna cable
- Integrated GPS/Beacon receiver (8 or 12 channel)
- TDC1 or TDC2 multiport cable
- Datalogger, TDC1 or TDC2
- System battery - two 12V 2.3A camcorder batteries

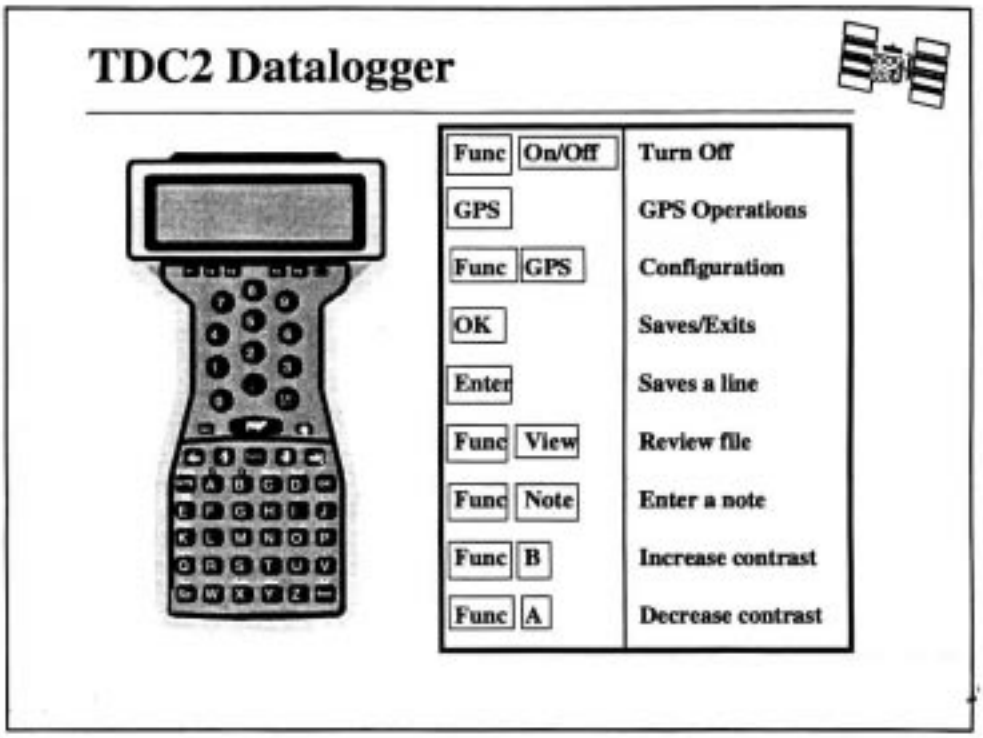

B. Features of a TDC2 Data Collector

- Full alphanumeric keyboard
- 8 line liquid crystal display screen
- 2 serial ports at top of unit
- MS-DOS (version 3.30 or later) stored in ROM
- Memory:
  - Standard: 570 kb
  - Extended: 3 mb
- Fully waterproof: stands immersion up to 1 meter (3 feet)
- Rugged: dust and shock proof, vibration resistant

Internal Power Source

- AA batteries (3):

  Considered the internal battery in the **Configuration\Hardware** menu.

- Backup Batteries:

  The TDC2 contains a trickle-charged internal battery which provides sufficient back up power to preserve the contents of the TDC2's memory for at least two weeks, if the main power source is removed.

Storing the TDC2

A serious risk with long term storage is battery leakage causing damage to the TDC2. Use only the highest quality alkaline cells for storage and ensure that they are brand new when fitted.

External Power Source

- External 12.5 volt lead acid:

  External power for receiver. Data collector can draw power from this source. These batteries do not have memory, therefore, can be left on charge at all times.

- Power adapter:

  Power adapter via cigarette lighter is also available. Do not turn vehicle off when GPS unit is on.

Attachment C

Introduction to Asset Surveyor Software

Introduction to Asset Surveyor Software

C-1 Turning On/Off Data Collector

1. To turn on, press On/Off.

2. To turn off, press **Func**, then On/Off.

C-2 Useful Key Combinations

- Enter is used to enter information on a given line.

- OK is used to validate information for an entire menu form.

- The **INFO** label on the screen (lower left corner) corresponds to the F1 key.

  - This option provides information for first-time users or for those who need a memory refresher. Scroll through the information pages. Try all the options listed.

Note—On a TDC-2 it is possible to exit the Asset Surveyor software. Exiting the program will take you to the DOS prompt. To re-enter Asset Surveyor, type ASSET at the command prompt.

C-3 Asset Surveyor Menus

Asset Surveyor contains three principle menus. They are the Main, Configuration, and GPS Operation menus.

GPS Operations–Used to view the status of receiver and satellites tracked.

Configuration–Used to configure the receiver for data capture.

Main Menu–Used to capture data, navigate, and transfer files to the PC. The menu options of the Main Menu are described in the following:

Data Capture–Used to collect rover files.

Navigation–Used to create/edit waypoints, print text reports from data collector, upgrade software, and to configure external sensors.

File Transfer–Used to communicate with your PC.

Utilities–Used to create waypoints, print text reports from the data collector, upgrade software, and to configure external sensors.

Base Station–Used to collect data in base station mode.

Info for New Users–Contains useful key combinations.

Attachment D

Configuring Rover Options

Table Attachment D-1. Configuring rover options.

Rover option	Recommended	Setting type
Point	**1s**[a]	**critical**
Line/Area	**5s**	**critical**
Not in feature	**none**	**non-critical**
Velocity	**All**	**critical**
Minimum Posn	**5**	**non-critical**
Pos. mode	**Manual 3D**	**critical**

Note:

When collecting 2D positions, you must enter the altitude.

D-1 Configuring Rover Options

- **Logging interval**–Defines the frequency at which a position is stored.
  - **Point features**–Set at *1* second.
  - **Line/Area features**–Should match the base station logging interval. Logging intervals may also depend on speed of travel:
    - If walking–*5* seconds.
    - If driving–*1* second.
- **Not in feature**–Stores a position even though you are not collecting features.
- **Logging velocity**–Velocity records can be used for attaining better post-processed accuracies in high multipath areas.
- **Minimum Posns**–Minimum number of positions collected for a given point feature. If the point feature is closed before the minimum number of positions are collected, the Asset Surveyor software will provide a warning.
- **Position Mode:**
- **Manual 3D**–Used 4 or more Svs to calculate a 3D position.
- **Elevation Mask**–Rover should be set higher then base to ensure correction (recommended value = *15˚*).
- **SNR Mask**–Signal-to-Noise ration or signal strength. The stronger the signal, the better (recommended value = *6.0*).
- **PDOP Mask**–SV constellation with PDOPs greater than the specified number are not used (recommended value = *6*).
- **PDOP Switch**– Only applicable in Auto 2D/3D Mode (recommended value = 6). When PDOP rises above 6, positions are recorded in 2D.

- **Audible Click**–If activated, the data collector beeps every time a position is logged (recommended value = Yes).
- **Log DOP Data**–If activated, changes in DOP changes in DOP are recorded in the rover file (recommended value = Yes).
- **Initial Position**–Useful entry when you have a brand new unit or when you travel from one geographic location to another. Provides the receiver with a head start on where to look for Svs.
- **Dynamic Code**–Helps control initial acquisition of satellites. Land, Sea, Air.

Table Attachment D-2. RTCM configuration.

Rover option	Recommended
RTCM input mode	**Auto**
RTCM version	**Auto**
RTCM station	**Any**
Warning time	**20 s**
Log PP data	**Yes**
Baud rate	**9600**
Data bits	**8**
Stop bits	**1**
Parity	**None**
Mode	**Auto range**
Frequency	**N/A**

Note:

Real-time data is referred to as Radio Technical Commission for Maritime Services (RTCM). The RTCM established the format to relay GPS correction messages from one monitoring station to a field user.

D-2 RTCM Configuration

RTCM input mode:

OFF If RTCM is not being used.

ON Enables RTCM, positions will be collected, but only when RTCM is available.

AUTO When RTCM is available, positions will be corrected in the field. when RTCM is not available, positions will be stored and available for postprocessing.

RTCM version:

Auto If you are unsure which RTCM version is being transmitted by your base station.

Ver. 2 Protocol: Most Trimble receivers receive version 2 protocol only.

USCG U.S. Coast Guard protocol.

RTCM station:

Any Enables the GPS receiver to accept RTCM from any base station; however, you can enter the identification of a particular station. The receiver will use the strongest RTCM signal available, if there are multiple bases broadcasting RTCM.

Warning Time:

If no new corrections have arrived over the RTCM link, the most recent correction is considered too old to provide accurate corrected positions. When warning time expires, the GPS receiver will warn you that your RTCM link has been lost.

Log PP data:

Must be configured to "Yes" in order to post process data.

Allows you to log additional data so that GPS positions corrected in real-time can be reprocessed in the Pathfinder Office software.

A setting of **Yes** will halve the number of RTCM connected positions you can store in the datalogger.

Press F1 Beacon, to receive beacon corrections.

Mode:

Off Pro XR will disable the beacon component.

Auto Range Pro XR will automatically lock to the closest beacon.

Auto Power Pro XR will automatically lock onto the most powerful beacon.

Manual Pro XR will use only the radiobeacon frequency you specify in the **Frequency** field.

Frequency:

Lists the frequency entered that the Pro XR is to track when in Manual mode.

Table Attachment D-3. Carrier phase configuration.

Rover option	Recommended
Carrier mode	**Query**
Measurements	**15 s**
Positions	**60 s**
Minimum time	**5 min.**

D-3 Carrier Phase Configuration

Use the carrier phase mode for surveying type activities. It is necessary to remain at a location for approximately 20 minutes to obtain an accuracy of 50 cm vertical and 10 cm horizontal. If your location is > 50 km from the base station then further inaccuracy is introduced. To configure for carrier phase measurements select F2 and set the following:

Career Mode:

OFF Carrier phase mode disabled.

ON Subsequent point features will be captured in carrier phase mode. (Used if all points will be collected in carrier phase mode).

Query When you start each subsequent point feature you will be asked whether or not that feature should be captured in carrier phase mode. (Used if only some points will be collected in carrier phase mode).

Measurements–15s.

Positions–Positions are not required for carrier phase-processing. Set to *None*:

Minimum Time–The minimum time for which you should remain at a point in order to record sufficient carrier phase data to process in 5 minutes. Set to *5* minutes.

Note—An accurate antenna height is very important when operating in carrier phase.

Press F3 to change the antenna height.

Height = <user entered>

Measure = <uncorrected>

Measure from the bottom of the antenna.

Type–MB:

EC = Compact dome.

MB = Integrated GPS\MSK beacon.

Attachment E

Data Capture

E-1 Before Creating a New Data File

Verify that you have a certain position fix. There are two options:

- Check the **Status Line**; it indicates the number of Svs tracked. You need 4 to collect a 3D position.
- Press GPS/Config to access the **GPS Operations** menu.

Tip—You must be connected to a receiver to access this menu.

To view the current position, do the following:

1. Press GPS/Config to access the **GPS Operations** menu.
2. Press Enter on **Position**.
   - Press Clear to escape back to the **GPS Operations** menu.
3. Arrow down, press Enter on **Receiver Status**.

Provides valuable information regarding critical settings such as, DOP, receiver firmware versions, and external battery voltages.

- Press Clear to exit.

4. Press Enter on **Satellite Info**.

Displays PRNs, SNR values, elevation, bearing, and URA (User Range Accuracy) information for individual satellites. URA (m) is an estimate of the accuracy of the pseudorange measurement to each satellite in meters.

- Other **GPS Operations** menu options;
  - **Navigation**–used to navigate from one location to another while collecting data.
  - **Waypoints**–used to view or create waypoints while collecting data.
  - **2D Altitude**–used to enter in altitude when operation in Manual 2D or Auto 2D/3D.
  - **Disconnect**–used to terminate communication with the GPS receiver.

5. Press Clear to return to the **Main** menu.

E-2 Creating a New Data File

1. Select **Data Capture** from the **Main** menu.
2. To create a new file, select **Create rover file**.
3. Use the automatic filename or type a DOS filename in the space provided.
4. Select a data dictionary:
   - Generic (default) includes: point, like, and area generic features.

- Custom data dictionary: Created in the Pathfinder Office and transferred to the data collector.

5. Check available space in the data collector.
6. F1 softkey changes the time format from UTC to local for display purposes.
7. Press OK to validate the screen.

E-3 Other Data Capture Options

- **Reopen rover file**–Used to open existing rover files.
- **File statistics**–Lists information about the features, file size, free space, start/end times, etc.
- **Delete files**–Used to delete files.
- **Data Dictionaries**–Displays a list of data dictionaries stored in the data collector.

E-4 Recording Data

1. Open a data file with the generic data dictionary.
2. Select **Point Generic**.

Notice the rate at which GPS positions are collected. The data collector beeps every time a position is collected, and the status screen provides a numeric counter.

- Sofkeys:
- F1, **PAUSE\RESUME**–Temporarily pauses data collection. When you press this key, the label changes to resume.
- F2, **EXT**–Activates the external sensor.
- F3, **OFFSET**–Activates a user defined current feature offset.
- ENTER–Used to enter info on a given line.
- OK–Used to validate info for an entire menu form.

3. Type a feature name for comment, press Enter. Once you have collected enough GPS positions, press OK to end the feature.
4. Select **Line Generic**.

- Softkeys:
- F1, **PAUSE\RESUME**–Temporarily pauses data collection. When you press this key, the label changes to resume.
- F2, **NEST**–You can **only** nest a point on a line or area. No other combination is acceptable.
- F3, **SEG**–Ends the current line feature and immediately starts a new one (connects the endpoints). Change the attribute values for the new line.

- F4, **QUICK**–Quickmark activation. A list of point features to quickmark appears.
- -->, F5–Lets you access more options.
- F1, **EXT**–Activates the external sensor.
- F2, **OFFSET**–Activates a user defined current feature offset.

5. Select **Area Generic**.
   - Softkeys:
   - F1, **PAUSE\RESUME**–Temporarily pauses data collection. When you press this key, the label changes to resume.
   - F2, **NEST**–Nesting features allows you to enter a point feature while you are collecting data for a line or area feature.
   - F3, **QUICK**–Quickmark activation. A list of point features appears.
   - F4, **EXT**–Activates the external sensor.
   - F5, **OFFSET**–Activaties a user defined current feature offset.
6. Exit **Data Capture**, press Clear and conform exit.

At any time during data capture, you can enter and exit the following Asset Surveyor menus:

- **Configuration**: To change settings.
- **GPS Operations**: To check SV status or navigate.

Warning—If you alter critical settings during data capture, you affect the quality of the GPS resulting positions.

LLNL
Environmental Restoration Division (ERD)
Standard Operating Procedure (SOP)

ERD SOP 4.15: ERD Self-assessments and Walk-abouts—Revision 1

AUTHOR(S):
V. Dibley, R. Goodrich

APPROVALS:	Date
Jesse Lyon Division Leader	6/30/06
Lucinda M Clark EPD QA Manager	05/11/06

CONCURRENCE:	Date
Rebecca Goodrich QA Implementation Coordinator	5/11/06

1.0 PURPOSE

The purpose of this SOP is to describe the steps ERD personnel are to take when performing self-assessments and walk-abouts. The purpose of the self-assessments is to improve quality and ensure compliance with all procedural, QA, and ES&H requirements. The purpose of the walk-abouts is to establish a means for the ERD Management to observe and interact with ERD personnel in the work environment.

2.0 APPLICABILITY

This procedure is applicable to all ERD quality-affecting activities. ERD work activities are conducted within the framework of the institutional Integrated Safety Management System (ISMS). The Environmental Management System (EMS) is a component of the ISMS, which is also supported during the planning, performing, and evaluation of the work processes.

3.0 REFERENCES

3.1 Safety and Environmental Protection (SEP) Directorate Environment, Safety and Health (ES&H) Self-assessment Plan (latest revision).

3.2 LLNL Environment, Safety and Health Issues Tracking System (ITS) Users Manual.

3.3 ERD Management Walk-About Policy.

4.0 DEFINITIONS

See SOP Glossary.

5.0 RESPONSIBILITIES

5.1 Division Leader (DL) or Deputy Division Leader (DDL)

The DL or DDL is responsible for establishing an ERD management walk-about schedule, performing the walk-about, writing a summary, and determining follow-up. The DL/DDL may also participate in the ERD QA/Management self-assessments.

5.2 Group Leader (GL)

The GL is responsible for establishing a walk-about schedule, performing the walk-about, writing a summary, and determining follow-up for those activities within their group's purview. The GL may also participate in the ERD QA/Management self-assessments.

5.3 ERD ES&H Coordinator

The ERD ES&H Coordinator is responsible for tracking the Safety and Environmental Protection (SEP) self-assessment due dates and requesting scheduling from the Hazard Control ES&H Teams. The ERD ES&H Coordinator is also responsible for tracking SEP self-assessment deficiencies to closure using the institutional Issues Tracking System (ITS).

5.4 ERD Quality Assurance Implementing Coordinator (QAIC)

The ERD QAIC is responsible for coordinating and participating in the ERD QA/Management self-assessments, developing assessment checklists, writing the assessment reports, and maintaining the ERD Self-assessments Schedule and ERD Assessment Data Spreadsheet.

5.5 Hazards Control ES&H Team

The ES&H Team is responsible for performing the SEP facility self-assessments and inputting the assessment results into ITS.

5.6 ERD Facility Point of Contact (FPOC) or Responsible Individual (RI)

The FPOC/RI or designee is responsible for accompanying the self-assessment team and resolving any deficiencies or questions.

6.0 PROCEDURES

ERD assesses division activities by performing self-assessments and/or walk-abouts. Environment, Safety and Health (ES&H) self-assessments are required per the Safety and Environmental Protection (SEP) Directorate ES&H Self-assessment Plan. The EPD Quality Assurance Management Plan (QAMP) requires quality Assurance (QA) self-assessments.

6.1 SEP ES&H Self-assessments

Self-assessments are categorized into Focus Areas and Facilities in the SEP ES&H Self-assessment Plan. The EPD Assurance Office coordinates the assessment of the Focus Areas, therefore, that process will not be covered by this procedure. The following steps describe how the Facilities are assessed by ERD.

6.1.1 The ES&H self-assessments are performed per the schedule contained in the SEP ES&H Self-assessment Plan.

6.1.2 The ERD ES&H Coordinator reviews the SEP Self-assessment Plan schedule and determines what facilities need to be assessed to meet the Plan.

6.1.3 The ERD ES&H Coordinator contacts the Hazards Control ES&H Team 4 and requests the facilities to be scheduled for inspection.

6.1.4 The ERD ES&H Coordinator works with the ES&H Team and the ERD Facility Point of Contact (FPOC) to determine an acceptable inspection date.

6.1.5 The FPOC accompanies the Team on the inspection. Whenever possible, a close-out meeting with the ES&H Team is conducted at the conclusion of the assessment to review deficiencies and/or issues for factual accuracy.

6.1.6 The ES&H Team completes the inspection report and enters associated findings into ITS. The EPD Assurance Office receives the report from the ES&H Team, who forwards a copy to the ERD Division Leader and the ERD ES&H Coordinator.

6.1.7 The EPD Assurance Office assigns new ownership of the ITS assessment records to the ERD ES&H Coordinator who edits the records as necessary and then notifies the FPOC or RI to resolve assessment findings. The ERD ES&H Coordinator updates ITS as corrective action is implemented to resolve deficiencies and/or issues. After the ITS item is satisfactorily completed, the corrective action is verified, and then closed-out by the appropriate personnel. The self-assessment is also recorded in the ERD Assessment Data Spreadsheet maintained by the ERD QAIC.

6.1.8 The ERD QAIC verifies that the items in the ITS "Ready to Release" table are correct and ready for release and then recommends the records for release.

Note: See Reference 3.2 for ITS procedures.

6.2 ERD QA and Management Self-assessments

6.2.1 The ERD self-assessments are performed at a frequency documented in the ERD Self-assessments Schedule maintained by the ERD QAIC.

6.2.2 The ERD QAIC reviews the ERD Self-assessments Schedule and determines what quality-affecting activities need to be assessed.

6.2.3 The ERD QAIC then contacts a member of the ERD Management Team (Group Leaders and above) and the responsible person for the activity to schedule the assessment. ES&H Team disciplines may also be invited periodically to accompany the ERD assessment team.

6.2.4 The ERD QAIC reviews the self-assessment checklist for the activity and updates it if necessary. The checklist should include questions regarding applicable procedures, QA, Safety, and Management issues.

6.2.5 The QAIC and Management representative may also be accompanied by a technical expert if necessary. After the assessment, the QAIC writes the report and assigns the assessment a unique number using the year and sequential number of the assessment (i.e., ERD-XX-YYY). The QAIC sends the report to the other assessors and the assessed individual for an accuracy review and input. Any necessary follow-up is determined and performed. A Quality Improvement Form (QIF) may be used to record, correct, and bring to closure any deficiencies noted during the assessment.

6.2.6 A copy of the final report is sent to the Division Leader, the EPD Assurance Office and all other appropriate individuals. The original report is archived in the QAIC files.

6.2.7 The self-assessment is recorded in the ERD Assessment Data Spreadsheet maintained by the ERD QAIC.

6.3 Walk-abouts

ERD performs two levels of walk-abouts. The first level is performed by the DL or DDL. The second level is performed by the appropriate GL. Both levels are meant to give the DL, DDL, or GL an opportunity to observe and interact with ERD personnel in the work environment. The following steps are the same for both levels of walk-abouts.

6.3.1 Walk-abouts will be randomly scheduled. The walk-abouts will be scheduled for approximately 1 hour at the Livermore site and up to half a day at Site 300.

6.3.2 The DL, DDL, or GL determines what activity or facility will be observed. The GL's walk-abouts are generally limited to group level activities, whereas the DL/DDL's walk-abouts may be any Division activity or facility. A single scheduled walk-about visit will generally encompass one ERD facility or field activity, or a group of co-located facilities or field activities.

6.3.3 The DL, DDL, or GL notifies the appropriate personnel of a scheduled walk-about.

6.3.4 A formal checklist is not used, however, the following goals are kept in mind while performing the walk-about:

- obtaining first-hand knowledge of work activities from employees
- gauging ES&H knowledge at the workplace
- observing Integrated Safety Management in work processes
- responding to employee questions and concerns
- observing the condition of facilities and equipment

6.3.5 The DL, DDL, or GL will take notes during the walk-abouts for use in preparing a summary of observed best practices and items identified for follow-up. This summary will be provided to the appropriate personnel (this may include group leader, project leader, or supervisor as well as to participants of the walk-about). A copy of the walk-about summary will also be forwarded to the EPD Assurance Manager and the ERD QAIC.

6.3.6 The ERD QAIC will input the walk-about into the ERD Assessment Data Spreadsheet.

6.3.7 Any necessary follow-up is determined and performed.

7.0 QUALITY ASSURANCE RECORDS

7.1 Self-assessment/walk-about checklists or notes

7.2 Self-assessment/walk-about Reports

7.3 Self-assessment/walk-about schedules

7.4 ITS Entries

8.0 ATTACHMENTS

Attachment A—Example Self-assessment Checklist

Attachment B—Example Self-assessment Report

Attachment C—Example Walk-about Report

Attachment A

Example Self-assessment Checklist

Name of Treatment Facility & Site ID:
Date of Assessment:
Assessor(s):
TF Operator:

GENERAL
Summarize treatment facility operations.

What readings are recorded?

SAMPLING
What sampling locations are designated in the Permit /Sampling plan?

Are field QC samples taken?

What analyses are performed on the influent/effluent water per the Permit /Sampling Plan?

Are there any deviations from the Sampling Plan?

What is the frequency of sampling performed as outlined in the Permit /Sampling Plan?

How is all sampling documented?

What sampling containers are used and how are unused sample containers stored?

Are appropriate sample preservation techniques used and documented?

What procedures are used for sample storage, transportation and transfer?

Are labels, shipping documents and COCs completed properly?

Are some chemical analyses performed in the field or on-site? What?

DOCUMENTATION

Is a current permit posted?

What information are collected in controlled logbooks?

Does the TF operator review analytical data?

When does the operator use preliminary data vs. official?

Is the TF operator familiar with the permit limits?

What actions are taken if contaminants are found in the effluent, or outside permit limits?

How is facility operation communicated?

Is the TF operator familiar with the QIF process?

Have they ever used the QIF process to report nonconformances?

M&TE

What M&TE are used and for what purpose? (obtain model #s)

Does each piece of critical M&TE have a calibration/maintenance logbook and a sticker?

Is the appropriate information documented?

How are the instruments calibrated/verified?

At what frequency?

Are certified standards used and how are they stored?

Is the manufacturer manual available?

ES&H

What hazards does the operator think they work with?

Are acid/base spill kits and eye wash kits available?

Are the eye washes tested and documented?

Are normal on-site field sampling activities conducted in at least Level-D-protection?

Are any food, drink, or tobacco being used during operations?

Are Material Safety Data Sheets available

Is the Site Safety Plan available?

What training has the TF operator received?

What IWSs are applicable to the facility?

Has the operator performed a "read & sign" of the applicable IWS prior to conducting work activity?

Are SOPs available?

Is there a current O&M available?

Is the emergency contact list up-to-date?

Do you participate in safety meetings?

WASTE

What wastes are generated?

Is equipment decontaminated?

How are the decontamination liquids contained for disposal?

How are wastes disposed of?

MANAGEMENT

Do you feel you play an important role to achieve quality in the work place?

Are you clear about your responsibility and authority in the ERD organization?

Do you feel your supervisor is accessible?

Are your associates supportive?

What are your thoughts on the amount of documentation you prepare?

Is management responsive to provide the necessary resources to do the job?

Have you received adequate training, including On-the-Job Training?

Would the operator feel comfortable stopping unsafe operations?

Are you aware of ISMS? Describe.

Attachment B

Example Self-assessment Report

Assessment Number: ERD-04-004

ENVIRONMENTAL RESTORATION DIVISION INTERNAL ASSESSMENT
Submitted to Jesse Yow, Environmental Restoration Division Leader

Assessment Criteria:
The Treatment Facility operations were evaluated against the ERD Treatment Facility Self-assessment checklist. The self-assessment addressed quality assurance and control, environmental, safety and health, management issues, instrumentation, training and documentation.

Assessor:

_____
Gene Kumamoto, EPD Assurance Office

QAIC

_____
Rebecca Goodrich, ERD

Assessment Date:
December 13, 2004

Assessed Facilities:
B830-DISS
B854-SRC (STU08)
B854-PRX (STU02/BTU03)
B830-SRC (GTU05/VES6)
B817-SRC (STU10)

Interviewee(s):
Steven P. Orloff, Treatment Facility Operator
Paula Foerschler, Training Coordinator

Assessment Observations:

Quality Assurance/Quality Control and Environment, Safety and Health (ES&H)

Controlled copies of the Operations and Maintenance Manual (O&M), Vol 1 and Standard Operating Procedures (SOPs) assigned to Steve Orloff were available during the time of the assessment. The O&M is a generic manual that is not facility specific. An uncontrolled copy of the Site Safety Plan for LLNL CERCLA Investigations Site 300 was also available. Material Safety Data Sheets (MSDS) are included in the O&M, Vol 1 as applicable to the specific activity or specific treatment facility. The Site Safety Plan for LLNL CERCLA Investigations Site 300 is being revised and is currently being reviewed by ERD management. The Treatment Facility Operator is familiar with Integration Work Sheet (IWS) 11341: Ground Water and Soil Vapor Treatment Facility Operations at Site 300. Steve has reviewed and signed-off on the IWS using the read and sign option available in the eIWS system. The Treatment Facility Operator participates in safety meetings on an as needed basis. Meetings are documented in the appropriate logbook or technician meeting minutes. The Treatment Facility Operator reviews preliminary data received as a faxed copy or other electronic means, such as email or via web page provided by the contracted analytical laboratory (CAL). The

operator is familiar with permit limits and indicated that the permit limits can be found in the O&M, Vol 1. Sampling points are not specifically outlined in the permits or in sampling plans. It was discussed with the operator, that a non-specific definition of the sampling point could create a discrepancy in the monitoring result. For example, the requirement for an effluent sample in Appendix Q of the O&M does not specify or uniquely identify a sampling location at a facility; multiple effluent locations exist that would produce different analytical results. Steve was familiar with the QIF process. The records generated at the facilities, such as logbooks remain at the facility until completed at which time they are submitted to the Information Systems Management Group (ISMG) for archival.

ERD Critical Measuring and Test Equipment (M&TE)

Onsite measurements, such as pH and temperature are routinely taken at the facilities. Two (2) Thermo Vapor Analyzers (TVA) with a Flame Ionization Detector (FID), model TVA-100B, serial or identifier numbers 72240 and 72239-370 are currently being used to collect vapor measurements at the granular activated carbon (GAC) canister influent, effluent and intermediate sampling points. The instrument was properly labeled with an "LLNL Calibration Program" sticker, as well as a sticker presenting the last "calibrated date of 3-16-04". The vendor omitted placing a "next calibration due date" sticker onto the instrument, even though operators have been requesting the sticker via the accompanying requisition order. The instrument is factory calibrated every six months and verified by the user before each use. Certified standards were used and stored in an upright position in the same location as the TVA. All user verifications were recorded in the calibration/maintenance logbook. The manufacturer manual was available and included as part of the logbook. There was no documentation included in the logbook indicating that the facility Technician had been trained on proper usage of the TVA, however the technician interviewed is not responsible for the instrument calibration. The calibration/maintenance logbook was intact and up-to-date including: the ERD Critical M&TE Roll-up Procedure and the most recent revision of the ERD Critical M&TE spreadsheet. The TVA is the only instrument used at these facilities that is defined as "critical M&TE". Larry Griffith oversees and ensures that all critical M&TE used are calibrated and maintained as described in ERD SOP 4.8 for site 300 vapor analyzers identified as M&TE.

Management Issues

Steve felt as though he played an important role to achieve quality in the work place. He acknowledged that he was clear about his role, responsibilities and authority in the ERD organization. He verbalized the lines of communication used for facility operation beginning with the Field Operations Manager through to the EPD Department Head. He felt that his supervisor was accessible and that his associates were very supportive. The operator was able to describe the Integration Safety Management System (ISMS). As a reminder, he has a laminated description of the ISMS process attached to his lanyard that holds his LLNL badge.

Treatment Facility Operations

Building 854-Source

Solar Treatment Unit (STU) 8, known as Building 854-Source has been operating since December 13, 1999. Influent concentrations of trichloroethylene, nitrate, and perchlorate are approximately 200-300 μg/L, 56-57 mg/L, and 7-8 μg/L, respectively. Well water from W-854-02 is extracted at 3.5 gpm and treated using two SR-7 resin columns (perchlorate) and three aqueous phase carbon drums (TCE). The effluent water containing nitrate is caught in a holding tank then discharged at 18 gpm via misting towers located on the hillside above the facility. The facility receives its electricity from Building 854F and is not dependent on solar power.

Building 854-Proximal
Solar Treatment Unit (STU) 2 and Biological Treatment Unit (BTU) 3, known as Building 854-Proximal has been operating since November 13, 2000. Influent concentrations of trichloroethene, nitrate, and perchlorate are approximately 100-120 μg/L, 42-46 mg/L, and 11-14 μg/L, respectively. Well water from W-854-03 is extracted at 1.0 gpm and treated using three aqueous phase carbon drums (TCE), a biological treatment unit (perchlorate and nitrate), and finally two SR-7 resin columns (perchlorate). The biological treatment unit includes: an acetate injection system, four bioreactor tanks, and three 55-gal tanks with a transfer pump for overflow or recycle. The bioreactor tanks are filled with 6" of large gravel packed around 3" drain pipes then layered with aquarium grade gravel to within 3" of the tank lip. The wetland bioreactor is constructed with wetland plants including *Typha* spp. and *Cyperus* spp. which provide a habitat and a carbon source for indigenous microorganisms. The effluent water, which may contain nitrate at concentrations below the effluent discharge limit for nitrate, is discharged to an infiltration trench just southeast of the facility. The facility receives its electricity from solar power and typically operates 12 hours a day.

Building 830-Distal South
Building 830-Distal South (formerly called Iron Filings) has been operating since July 27, 2001. Influent concentrations of trichloroethene, nitrate, and perchlorate are approximately 60 μg/L, 60 mg/L, and 4 μg/L, respectively. W-830-51, 52, and 53 are artesian wells and flow down the canyon into the treatment system without power (currently W-830-53 is not flowing) at 1 gpm. The well water enters two drums of GAC for VOC removal, then through a resin bed of SR-7 (perchlorate), and acetic acid is added before the treated water enters the bioreactors (nitrates). The bioreactors are filled with sand, gravel and rock. Acetic acid is added to prevent biofouling by acting as a food source for the bacteria to decrease the solids accumulation in the bioreactors. The treated water is ultimately discharged to a drainage culvert, 35 yards south of the facility. Presently, the facility does not operate during the weekends, due to the possibility of the acetic acid running out or the bioreactor sand clogging-up and overflowing.

Building 817-Source
STU-10 is known as Building 817-Source. The well being pumped is source well, W-817-01. The constituents of concern (COCs) for ground water treatment are RDX, nitrates, VOCs and perchlorate. Well water from W-817-01 is extracted and treated using two SR-7 resin columns (perchlorate, nitrate) followed by two aqueous phase carbon drums (RDX, VOCs). The resulting treated ground water effluent is then re-injected into well, W-817-6A.

Building 830-Source and permitted VES-06
At B830 source (GTU05), the wells identified as the extraction wells are W-830-1807, W-830-59 and W-830-19. The COCs for treatment are trichloroethene, nitrates and perchlorate.
Extracted water is treated using two SR-7 resin columns (perchlorate, nitrates) followed by two aqueous phase carbon drums (TCE). The resulting aqueous effluent is discharged through a misting system to ground, uphill from the extraction wells.
This facility is also air permitted for a VES system (VES-06). The headspace for well W-830-1807 is extracted and run through GAC for TCE.

Training

The Treatment Facility Operator's LTRAIN record was up-to-date and current based on the required training generated from LTRAIN. There were no LTRAIN records demonstrated indicating that the operator had participated in an OJT program or has a requirement for OJT for facility operation.

SUMMARY

Follow-up Issues

There were no findings to follow-up from the last assessment conducted at these facilities on May 14, 2001 and May 30, 2001.

New Issues

1) The ERD Site 300 site safety plan is an uncontrolled document, however the technicians rely on the IWS for information on the hazards.
2) The ERD O&M Manual, Vol 1 is a generic document that does not include specific information on individual treatment facility operation.
3) There is not a documented startup or shutdown procedure for the treatment facilities in the O&M.
4) The TVAs, serial #72240-370 and 72239-370 did not have the calibration due dates (SEP M&TE requirement) affixed to each instrument, however the next calibration date is documented in the M&TE calibration log. The TVAs are factory calibrated and the next calibration due date sticker is an issue with the vendor.
5) There was no documentation in the M&TE logbook indicating that the operator had been trained on proper usage of the critical M&TE.
6) GAC drums that are left standing in the elements for a period of time begin to rust from the accumulation of standing water. These GAC drums are in service as part of the treatment process. A preventative maintenance program is not included as part of the O&M, Vol 1.

Post-Assessment Notes (1/28/2005)

New Issues:

1) Corrective Action: The Site Safety Plan for LLNL CERCLA Investigations at Site 300 will be issued as a controlled document after completing the review process.
2) Corrective Action: Individual O&M manuals are in the process of being generated.
3) Startup and shutdown procedures are being included in the individual facility O&Ms.
4) A QIF (ERD-05-004) will be generated to follow-up on the continuing problem of vendors not providing a "next calibration due date" sticker on the critical M&TE instruments.
5) A QIF (ERD-05-005) will be generated to address OJT documentation for critical M&TE instruments.
6) A QIF (ERD-05-006) will be generated to address preventative maintenance concerns, i.e., rusting of GAC drums.

Attachment C

Example Walk-about Report

ERD Management Walkabout of Students Working With Core

When: Tuesday, July 12, 2005
Location: Building 438, High Bay
Staff: Michigan State University Students
Manager: Lindee Berg (AI)

The purpose of this walkthrough was to compare the handling of core in the Building 438 High Bay with recently developed IWS #12614 to ensure the IWS accurately summarizes the hazards and controls. The focus was on the Michigan State University student work associated with the core handling and to ensure ERD was providing them a safe work environment.

Findings:

- The AI felt comfortable that the IWS was written to appropriately address the work activity.
- The AI felt comfortable that the subactivities addressed in this IWS were appropriate.
- The AI felt comfortable that the IWS provided adequate direction to the workers. The AI observed that the bottles of liquid were clearly labeled (water, HCl, bleach), and that the students were following protocol such as wearing safety glasses and leather gloves while breaking the core. In this walkabout, the AI did not observe use of bleach or acid; the opening of new boxes; core disposal; or core transport from the storage tent. Although the 10% dilute HCl was not being used at the time, it was noted that it was not sitting in a containment tray.
- The AI felt comfortable that the IWS description accurately summarizes the work activity.
- The AI felt that the IWS description was consistent with the title of the IWS, and that it was written in clear language that could be understood by the workers.
- The AI felt that the hazards and controls were properly identified, appropriate to the work area, and were clearly communicated in the IWS.
- The AI felt that the training identified was appropriate. The AI was told by Leslie Mikesell (the graduate student) that the students all had proper back care training through Michigan State University, and that they rely on the technicians to get pallets of core or to retrieve any boxes that are accessible only by ladder.

Good Practices of Note:

- The students occasionally encounter mold when paper towels were used as spacers in the core boxes. They passed this information to LLNL staff, and I was told that the field geologists now try to use plastic or another material for spacers in current drilling operations. This was beneficial feedback from the users, and I told them I appreciate, and welcome such feedback.
- Although not noted in the IWS, core fragments tend to get on the floor after box movement, core splitting, etc. The students occasionally sweep the lose debris into a pile out of the walking path so it doesn't become a trip or slip hazard. The students good housekeeping procedures seem like a good practice that should be added to the IWS. I told them I appreciated their attention to these types of detail.

Items identified for follow-up actions:

- RI will follow up on getting a containment tray for the dilute 10% HCl dropper bottle.
- The RI should add a general housekeeping note in the IWS about sweeping occasionally to avoid slip hazards.

Distribution:

Fred Hoffman
Ben Johnson
Charlie Noyes
Judy Steenhoven
Jesse Yow
ERD File "Div Walk-Abouts" (via Becky Goodrich)

LLNL Environmental Restoration Division (ERD)
Standard Operating Procedure (SOP)

ERD SOP 4.16: ERD Lockout/Tagout Program
Revision: 1

AUTHOR(S):
G. Mack, G. Metzger

ENVIRONMENTAL RESTORATION DIVISION
CONTROLLED COPY
#
THIS IS A RED STAMP
ERD

APPROVALS: Date

Division Leader — 8/30/06

Engineering and Operations Group Leader — 8-21-06

CONCURRENCE: Date

Rebecca Goodrich — 8/21/06
QA Implementation Coordinator

1.0. PURPOSE

The purpose of this SOP is to satisfy the requirements of the LLNL Lockout/Tagout (LOTO) Program defined in the LLNL ES&H manual Volume II, Document 12.6, and the Occupational Safety and Health Administration (OSHA) Control of Hazardous Energy Source, Standard 29CFR1910.147. The Program establishes minimum requirements for LOTO of energy-isolating devices whenever service or maintenance is performed on equipment. Where "unexpected" energization (or startup) of the equipment or the release of stored energy could occur and possibly result in injury, these requirements shall be applied to ensure that the equipment is stopped, isolated from all potentially hazardous energy sources, and locked out and tagged before workers begin service or maintenance. The LOTO Program is implemented through LOTO procedures for shutting off and securing such equipment. LOTO procedures shall be strictly followed when it is necessary to work on any equipment that may release any form of hazardous energy, including, but not limited to, electrical, rotational, mechanical, radiation, chemical, hydraulic, or pneumatic energy sources. Construction activities also fall under the

scope of this document, specifically construction equipment that poses an energy release hazard to the person who is working on it.

Electrical distribution switching activities that fall under the scope of the *High Voltage Distribution System Operation Manual* (available from the Plant Engineering Department) and are controlled by a switching procedure are not covered by these requirements, although the switching procedure may incorporate LOTO requirements as appropriate.

The term "LOTO-authorized worker", as used in this document, refers to an LLNL worker or supplemental labor worker who is authorized to perform LOTO.

The term "work supervisor", as used in this document, refers to the person designated by management to be the day-to-day supervisor of a LOTO-authorized worker. A work supervisor may be the payroll supervisor of a LOTO-authorized worker assigned a specific, short-term duty in an area. LOTO-authorized workers assigned duties in more than one area may have more than one work supervisor. The work supervisor(s) shall ensure that the LOTO-authorized worker is trained and qualified to perform assigned tasks. Note that the term “equipment”, as used in this supplement, refers to machines, facility and research and development (R&D) equipment, and equipment components. Other terms used in this SOP can be found in the SOP Glossary.

2.0 APPLICABILITY

2.1 The LOTO Program applies to all LLNL personnel. For the ERD Site 300 treatment facility operations, lockout/tagout of equipment is performed by the Electric Shop within the Plant Engineering Dept. in accordance with the LOTO Program. The LOTO Program also applies to subcontractor personnel who do not have an equivalent lockout/tagout program that satisfies the requirements of the Occupational Safety and Health Administration (OSHA). This LOTO Program is a directorate level focus element scheduled for triennial assessments. Issues Tracking System (ITS) deficiencies associated with non-conformances detected during the assessment process can result in Priority Items 1A, 1B, and 3.

ERD work activities are conducted within the framework of the institutional Integrated Safety Management System (ISMS). The Environmental Management System (EMS) is a component of the ISMS, which is also supported during the planning, performing, and evaluation of the work processes.

In addition, the program applies to servicing and maintenance activities (including lockout and tag) that are part of a facility or program's normal operations. These include:

- Lockout/Tagout of the equipment.
- The removal or bypass of a guard or other safety device.
- Other activities that require a person to place his/her body into an area of the equipment where work is being performed on material (point of operation) or where an associated danger zone exists during a machine-operating cycle.

A wide variety of energy sources that may need to be locked out and tagged during servicing or maintenance of the equipment is covered under this Program. These include, but are not limited to:

- Electrical
- Hydraulic
- Pneumatic
- Mechanical
- Gravity
- Thermal
- Chemical
- Fluids and Gases
- Water under pressure
- Steam

2.2 The LOTO Program Does Not Apply to:

- Minor tool changes, adjustments, and other minor servicing activities that take place during normal operations provided that such activities are routine, repetitive, and integral to the use of the equipment and the work is performed using alternative measures that provide effective personnel protection.

- Work performed on cord and plug-connected electric equipment, if exposure to the hazards of unexpected energization or start up of the equipment is controlled by unplugging the equipment from the energy source, or if the plug is under the exclusive control of the worker performing the servicing or maintenance activity. Pneumatic tools may also fall into this category, provided that they can be completely isolated from their energy source.

3.0 REFERENCES

3.1 *Code of Federal Regulations*, Title 29, Part 1910.147, "The Control of Hazardous Energy (Lockout and Tagout);" and Part 1910, Subpart S, "Electrical."

3.2 Health & Safety Manual, Supplement 26.13, "LLNL Lockout and Tag Program."

4.0 DEFINITIONS

See SOP Glossary.

5.0 RESPONSIBILITIES

5.1 Division Leader (DL)

The DL's responsibility is to ensure that all activities performed by ERD at the Livermore Site and Site 300 are performed safely and comply with all pertinent

regulations and procedures, and provide the necessary equipment and resources to accomplish the tasks described in this procedure.

5.2 Project Leader (PL)

The PL's responsibility is to ensure that all activities are performed safely and comply with all pertinent regulations and procedures, work is authorized through an Integration Work Sheet (IWS), and there is sufficient funding to initiate work.

5.3 Engineering and Operations Group Leader (EOGL)

The EOGL's responsibility is to ensure that proper procedures are followed for activities (e.g., construction, activation, facility operation and sampling).

5.4 Site Safety Officer (SSO)

The SSO's responsibility is to ensure the safety of ERD's ongoing operations and facilities and work performed.

5.5 Equipment Supervisors

Equipment supervisors are usually grouped into one of following three categories:

1. Equipment supervisors who are responsible for programmatic equipment (i.e., equipment owned, operated, and maintained by the program).
2. Equipment supervisors who are responsible for programmatic equipment that is maintained by Plant Engineering.
3. Equipment supervisors who are responsible for installed real property equipment that is maintained by Plant Engineering.

5.5.1 Equipment Supervisors for Programmatic Equipment

These equipment supervisors are responsible for:

- Notifying all affected workers that service or maintenance must be performed on the equipment and that it must be shut down, locked out, and tagged.

  Note: Existing e-mail notification lists, distribution lists, roster lists will satisfy this requirement.

- Ensuring that procedures outline the techniques to be used to lockout and tag sources of hazardous energy for equipment in their area of responsibility.
- Exchanging information about their respective lockout/tagout procedures with outside subcontractor supervisors.
- Ensuring that their personnel understand and comply with outside subcontractors' lockout/tagout procedures.

- Verifying that appropriate training has been conducted for those affected workers in the facility. (This training is the responsibility of payroll supervision.)
- Providing personal protective equipment (PPE) (including locks and tags) to authorized workers if not available from the functional supervisor.
- Providing any special chains, wedges, blank flanges, key blocks, adapter pins, self-locking fasteners, or other hardware required for isolating, securing, or blocking energy sources.

5.5.2 Equipment Supervisors for Programmatic Equipment Maintained by Plant Engineering

Both the programmatic equipment supervisor and Plant Engineering equipment/functional supervisor are assigned responsibilities for these types of equipment.

Programmatic equipment supervisors are responsible for:

- Notifying all affected workers that service or maintenance must be performed on the equipment and that it must be shut down, locked out, and tagged.

  Note: Existing e-mail notification lists, distribution lists, roster lists will satisfy this requirement.
- Ensuring that procedures outline the techniques to be used to lock out and tag sources of hazardous energy for equipment in their area of responsibility.
- Ensuring that appropriate training has been conducted for those affected workers in the facility (This training is the responsibility of payroll supervision).
- Providing any special chains, wedges, blank flanges, key blocks, adapter pins, self-locking fasteners, or other hardware required for isolating, securing, or blocking energy sources.

Plant Engineering equipment/functional supervisors are responsible for:

- Writing procedures (when required) that outline the techniques to be used to lock out and tag sources of hazardous energy for equipment in their area of responsibility.
- Notifying the equipment supervisor in the program that service or maintenance must be performed on the equipment and that it must be shut down, locked out and tagged.
- Exchanging information about their respective LOTO procedures with outside subcontractor supervisors hired by Plant Engineering.
- Ensuring that their personnel understand and comply with outside subcontractors' lockout/tagout procedures.

- Providing PPE to Plant Engineering LOTO-authorized workers. This would include locks and tags, standard lockout adapters, and other fixtures.

5.5.3 Equipment Supervisors for Installed Real Property Equipment Maintained by Plant Engineering

Both the equipment supervisors within the facility and Plant Engineering work supervisors are assigned responsibilities for these types of equipment.

Equipment supervisors within the facility are responsible for:

- Notifying all affected workers that service or maintenance must be performed on the equipment and that it must be shut down, locked out, and tagged.

  Note: Existing e-mail notification lists, distribution lists, roster lists will satisfy this requirement.

- Ensuring that equipment assigned to them has a Plant Engineering identification number and that the power sources are labeled.

Plant Engineering work supervisors are responsible for:

- Writing procedures (when required) that outline the techniques to be used to lock out and tag sources of hazardous energy for equipment in their area of responsibility.
- Notifying the equipment supervisor in the facility that service or maintenance must be performed on the equipment and that it must be shut down, locked out, and tagged.
- Exchanging information about their respective LOTO procedures with outside subcontractor supervisors hired by Plant Engineering.
- Ensuring that their personnel understand and comply with outside subcontractors' lockout/tagout procedures.
- Providing PPE to Plant Engineering LOTO-authorized workers. This would include locks and tags, standard lockout adapters, and other fixtures.
- Providing any special chains, wedges, blank flanges, key blocks, adapter pins, self-locking fasteners, or other hardware required for isolating, securing, or blocking energy sources.

5.6 Work Supervisors

Work supervisors are responsible for:

- Ensuring that personnel understand the purpose of the LOTO Program and that they have the knowledge and skills required for the safe application, usage, and removal of energy controls.
- Ensuring and certifying that periodic inspections of the lockout/tagout procedures used by authorized workers are conducted.
- Providing PPE, including locks and tags, to authorized workers.

The Lockout/Tagout board currently in ERD Field Operations building is to be under the control of the work supervisor. This is necessary to prevent unauthorized use of the locks.

- Removing lockout/tagout devices in accordance with the procedure ERD LTP-99 (Attachment A) when the LOTO-authorized worker who applied them is not available.
- Ensuring that authorized workers complete the required logs and records.

Use ERD LTP Lockout/Tagout Usage Log (Attachment B). The log is to be retained by the work supervisor for two years.

- Ensuring that personnel understand the purpose of the LOTO Program and that they have the knowledge and skills required for the safe application, usage, and removal of energy controls.
- Maintaining a current Equipment List (Attachment C) to track all equipment used in ERD that will require Lockout/Tagout procedures to service and maintain, and a current LOTO Authorized Worker List (Attachment E).

5.7 Payroll Supervisors

Payroll supervisors are responsible for ensuring that all required training is provided to authorized workers.

5.8 Workers

5.8.1 Affected Workers

Affected workers are responsible for:

- Obtaining the training specified in Section 6.1.2 of this SOP.
- Complying with all requirements of the LOTO Program. In particular, affected workers shall not attempt to operate or energize equipment or systems that are locked out and tagged.

5.8.2 LOTO-Authorized Workers

Authorized workers are responsible for:

- Performing lockout and tag procedures in accordance with the LOTO Program.
- Coordinating their activities with other authorized workers for group lockouts and for transferring lockout devices and tags when personnel and shift changes.
- Referring to the equipment supervisor's procedure to identify the type and magnitude of the energy that the machine or equipment utilizes, understanding the hazards of the energy, and knowing the methods to control the energy.

- Participating in periodic inspections of lockout/tagout procedures in use when designated by the work supervisor.
- Obtaining the training and retraining specified in Section 6.1.1 of this SOP.

5.9 Hazards Control Department

Hazards Control is responsible for providing Course HS5245-W, “Lock and Tag” and HS5245-RW, "Lock and Tag" Refresher.

6.0 PROCEDURES

6.1 Worker Training

6.1.1 LOTO-Authorized Workers

Each authorized worker shall receive training in the recognition of applicable hazardous energy sources, the types and magnitude of the energy available in the workplace, and the methods and means necessary for energy isolation and control. This training shall include a combination of web-based education (Course HS5245-W) offered by Hazards Control and on-the-job training for specific equipment. NOTE: Course HS5245-W is intended only for authorized workers and their work supervisors. Retraining (HS5245-RW) is required every five years.

In addition, the functional supervisor shall ensure authorized workers understand the purpose of the LLNL LOTO Program and that they have the knowledge and skills required for the safe application, use, and removal of energy controls.

6.1.2 Affected Workers

All new workers are introduced to the LLNL LOTO Program as part of the “New Worker Safety Orientation” (Course HS0001). The equipment supervisor is responsible for ensuring that each affected worker working in the area is instructed in the purpose and use of lockout/tagout procedures, including test procedures. Although this training is the responsibility of payroll supervision, equipment supervisors shall ensure the training is completed prior to authorizing lockout/tagout procedures for their equipment.

6.1.3 Others

All other workers whose work operations are or may be in an area where energy-control procedures may be used shall be informed of the LLNL LOTO Program, and that they shall not attempt to operate equipment that is locked out and tagged.

6.1.4 Retraining

Authorized workers shall complete retraining (Course HS5245-RW) at least every five years. Whenever there is a change in job assignments, when a change in the equipment or processes presents a new hazard, or when there is a change in the energy-control procedures, additional on-the-job training may be required. Additional retraining shall be conducted whenever a periodic inspection reveals, or the supervisor has reason to believe, that authorized workers are not using the lockout/tagout procedures properly or that they lack the appropriate skills.

Retraining shall re-establish personnel proficiency and introduce new or revised control methods and procedures, as necessary.

6.1.5 On-the-job Training (OJT)

An OJT program shall be implemented to train current and new workers as to the function and hazards of ERD treatment facilities. It shall include equipment, locations, and special procedures used to service and maintain the facilities. The OJT provided to ERD personnel shall include LOTO procedures, when applicable.

Prior to commencement of field activities, perform preparation activities per SOP 4.1 "General Instructions for Field Personnel" including participation in the ERD Field Investigation Orientation Lesson Plan (course number EP7033-015) for new employees to ERD. Direct field supervision and OJT will be provided using the ERD's Treatment Facility Operations Lesson Plan (course number EP7033-016). Successful completion of the OJT(s) will be required prior to performing treatment facility work independently.

6.1.6 Training Records

Training records shall be maintained in accordance with the individual directorate's administrative procedures. Some training records may be entered into an LLNL training record repository. Hazards Control courses are entered into the Livermore Training Records and Information Network (LTRAIN). Other training records are maintained locally (i.e., in the worker's department).

6.2 Safety Considerations

6.2.1 The procedures described in the following sections will be performed in accordance with IWS 11576 "IWS-547 ERD-0018 Electronic Fabrication and Assembly" and IWS 11579 "ERD Routine Electronic Operations".

6.3 Locks, Tags, and Logs

6.3.1 Controlling Lockout Locks and Tags

- The work supervisor will normally provide authorized workers the appropriate PPE, including locks and tags. However, if not provided by the work supervisor, the equipment supervisor will provide the appropriate PPE, including locks and tags.
- The Plant Engineering functional supervisor shall provide any locks and tags to authorized Plant Engineering electricians; heating, ventilation, and air conditioning (HVAC) mechanics; and plumbers. Plant Engineering shall keep their own records of locked out and tagged equipment.
- The equipment supervisor normally shall provide any special chains, wedges, key blocks, adapter pins, self-locking fasteners, or other hardware required for isolating, securing, or blocking the equipment from energy sources.

The Occupational Safety and Health Administration (OSHA) require lockout devices and associated tags to be singularly identified, durable, standardized, and

substantial. To meet this requirement, only the following locks and tags shall be used at LLNL:

1. LLNL LOTO locks

   Per the ES&H Manual, Document 12.6, Section 3.9, the work supervisor shall provide LOTO-authorized workers with the appropriate locks or locks can be obtained from the ES&H Team 4. The lock shall be individually keyed, or the LOTO-authorized worker may have a set of locks that is keyed alike. No other person shall have the same key unless the LOTO-authorized worker decides to give a second key to the work supervisor for use only as described under "Exception" in Section 3.5, Document 12.6. Under no circumstances shall there be more than two keys for a lock. Lock mechanisms built into equipment are acceptable, provided that (1) such mechanisms isolate energy to the unit and (2) the LOTO-authorized worker controls the keys.

2. Tags

   (Form LLNL-DNR-30575-SLT, stock number 4280-71737). See the ES&H Manual, Vol. II, Doc. 12.6, Sec. 3.9. These tags are to be used for all personnel safety-related lockouts. They shall have the name of the worker applying the tags. All other applicable information on the tag shall be supplied by that authorized worker. Each tag shall be used only once.

6.3.2 Maintaining Lockout/Tagout Logs

Lockout/tagout logs shall include the name of the authorized worker, the name of the equipment, location, the date the lock(s) and tag(s) were installed, and the date when they were removed.

The work supervisor is responsible for ensuring that authorized workers complete the required logs and records.

6.3.3 Periodic Inspections

Work supervisors shall periodically (at least annually) inspect the lockout/tagout procedures conducted by authorized workers to ensure that these procedures and the requirements of the LLNL LOTO Program are being followed. Use the form Self-Assessment Checklist (Attachment D) to conduct this inspection. Periodic inspections shall include a review of the responsibilities (as defined in the LOTO procedures being inspected) of the Authorized Workers (Attachment E) assigned to work on the equipment.

Work supervisors shall perform periodic inspections or they may designate an authorized worker (other than the worker being inspected) to perform the inspections. If another authorized worker performs the inspection, the work supervisor shall accompany him/her and observe the procedures.

The work supervisor shall certify that the inspection was performed by identifying on the Lockout/Tagout Inspection Form (Attachment F) the equipment for which the LOTO procedure was being utilized, the date of the inspection, the names of the workers included in the inspection, and that of the person who performed the

inspection. Any deviations or inadequacies identified during the inspection shall be corrected before further lockouts are performed.

6.4 Other Requirements

6.4.1 Single-point Lockout

For single-point lockout/tagout equipment, a durable sign is to be placed on or next to the equipment indicating the location (e.g., electrical panel and breaker number) of the single energy-isolating device (Attachment G).

6.4.2 Multi-point and Special Lockout

For multi-point lockout and special procedure lockout, a durable sign is to be placed on or next to the equipment indicating the procedure number to be used to perform the lockout/tagout correctly. Attachment H is an example of a Multi-point Lockout/Tagout Procedure.

6.4.3 Special Lock Removal Procedure

To comply with the exception to paragraph (e)(3) for CFR1910.147, a special procedure is required when the removal of a lock by other than the authorized worker who applied the lockout/tagout device is not available to remove it. Specific actions and responsibilities are required to cut or remove the lock. See Attachment A for Special Lock Removal Procedure.

6.4.4 Energy-Isolating Device Limitations

If the energy-isolating devices cannot be locked out,

1. Have a qualified person install a suitable lockout attachment on the energy-isolating device, then proceed with the lockout/tagout process, or
    - If approved by the equipment supervisor and facility management, locate a lockable energy-isolating device (e.g., a panel board or switch board feeding the unlockable device) that will effectively isolate the device. Properly isolate, lock, and tag the device, or
2. Have a qualified person open (or close) the energy-isolating device (i.e. circuit breaker or valve), disconnect the wiring or piping (or insert a blank flange) from the device, and tag the wiring or piping (or blank flange) and the energy-isolating device, then proceed with the lockout/tagout process. NOTE: Any tag used with disconnected wiring, as described above, or any tag used with a blank flange or physically disconnected piping shall indicate the point of disconnect or the location of the blank flange, or
    - Open (or close) and tag the energy-isolating device. Assign a person as a safety watch to ensure that the energy remains isolated for the duration of service or maintenance, then proceed with the lockout/tagout process. A person assigned as a safety watch shall have no other duties, nor shall he/she leave his/her station for any reason, except when formally relieved from duty or for personal safety. A lockable energy-isolating device shall

be installed on equipment before personnel begin any service or maintenance task that might result in the unexpected release of hazardous energy. Non-lockable energy-isolating devices shall be designed or modified to accept a lockout device whenever equipment is replaced, new equipment is installed, or a major modification is performed. In addition, personnel must use PPE when performing these activities.

6.4.5 Deactivation and Mothballing

During deactivation or mothballing of a facility or building, it may be necessary to secure, lock, and tag electrical, compressed air, water, or other utility or programmatic services; however, no maintenance is to be performed. Locks and tags may be installed by the facility manager, building coordinator, or by an authorized worker designated by facility management. Either a "Danger" lock and tag or a "Caution" administrative lock and tag may be used, as appropriate. In this case, a lockout/tagout log is required, the keys and log shall be held by the Facility Manager.

6.4.6 Procedures List

Refer to Attachment I for a list of ERD Lockout/Tag procedures.

7.0 QUALITY ASSURANCE RECORDS

7.1 Completed Self-Assessment Checklists

7.2 Completed Lockout/Tagout Inspection Form

7.3 Completed Lockout/Tagout Usage Log

7.4 Completed Lockout/Tagout Program Procedure Forms

8.0 ATTACHMENTS

Attachment A—ERD LTP-99: Special Lock Removal Procedure

Attachment B—Lockout/Tagout Usage Log

Attachment C—Equipment List

Attachment D—Self-Assessment Checklist

Attachment E—Authorized Personnel List

Attachment F—Lockout/Tagout Inspection Form

Attachment G—ERD LTP-01: General Single-Point Lockout Procedure

Attachment H—ERD LTP-02: Multi-Point Lockout Procedure

Attachment I—Procedures List

Attachment A

Example
ERD LTP-99:
Special Lock Removal Procedure

ERD Lockout/Tagout (LOTO) Program

Special Lock Removal Procedure

ERD LTP 99 rev. 02/24/06

This procedure is to be used when the person who installed a lock is unavailable to remove the lock. There could be a variety of reasons why the authorized person who installed the lock is not on site to remove it: These include illness, travel, vacations, unplanned leave, and after hours emergencies.

This procedure permits the Work Supervisor to authorize the removal of the lock by key or by cutting after he/she has obtained ERD Division Leader approval. The Work Supervisor must be familiar with the normal operation of the equipment and understands the consequence of restoration to normal operation. Specifically, pump, compressor, blower, power supply start-up can result in tank overflows and similar events that can occur when the equipment is restored to service.

Also, the restoration of complicated electrical systems is considered work on energized equipment and is therefore classified as a Class 3 hazard until the system is secured. As a minimum, both a LOTO-authorized worker and a co-worker shall work together when this type of work is being performed.

Details of why this procedure is being executed:

_____
_____
_____
_____

RESTORING EQUIPMENT TO SERVICE

- ❑ Verify that the authorized employee who installed the lock is unavailable to restore the equipment.
- ❑ Contact the ERD Division Leader and obtain permission to remove the lock.
- ❑ Notify the Equipment Supervisor and all affected employees that the equipment is to be activated.
- ❑ Verify the work is complete and the system is safe to re-energize.
- ❑ When the equipment and personnel are clear, remove all locks. The energy-isolating devices may now be operated to restore the energy to the equipment.
- ❑ Return the locks and keys to the key control rack.
- ❑ Sign the *Removed Date* portion of the Lockout/Tag log book.
- ❑ Notify the authorized employee who installed the lock that the lock has been removed and the equipment is back in service.
- ❑ File this form with other completed ERD LTP forms.

Restoration Executed by: _____ Date: _____

Work Supervisor: _____

Adapted from the LLNL ES&H Manual Document 12.6 dated September 15, 2003.

Attachment B

Example
Lockout/Tagout Usage Log

ERD Lockout/Tagout Program
Lockout/Tagout Usage

Lock Number	Location Facility/Equipment	LOTO-Authorized Worker	Procedure	Installed Date	Removed Date

Attachment C

Example Equipment List

ERD Lockout/Tagout Program
Equipment List

Facility Area	Unit	Equipment Supervisor	Equipment Type	Lockout/Tagout Procedure
TFE-East	PTU-03	Anderson, P.	Furnas Motor Control Center	ERD LTP 01
			Well pump connections	ERD LTP 01
TFE/NW	PTU-09	Anderson, P.	Furnas motor control center	ERD LTP 01
			Well pump connections	ERD LTP 01
TFE-Hotsp	GTU-07	Anderson, P.	ERD designed motor control center	ERD LTP 01
			Well pump connections	ERD LTP 01
TFG-North	MTU-02	Anderson, P.	ERD designed motor control center	ERD LTP 01
			Well pump connections	ERD LTP 01
TFG-1	GTU-01	Anderson, P.	ERD designed motor control center	ERD LTP 01
			Well pump connections	ERD LTP 01
TF406/NW	GTU-03	Anderson, P.	ERD designed motor control center	ERD LTP 01
			Well pump connections	ERD LTP 01
TFA	TFA	Kawaguchi, S.	Air stripper blower motor starter	ERD LTP 01, LTP 02
			FCS enclosures	ERD LTP 01
			North pipeline motor starters	ERD LTP 01
			Variable speed drives	ERD LTP 03
			Well 415	ERD LTP 01
			West well motor starters	ERD LTP 07
TFB	TFB	Kawaguchi, S.	Air stripper motor starters	ERD LTP 01, LTP 02
			Control systems	ERD LTP 01
			Pipeline motor starters	ERD LTP 01
			Variable speed drives	ERD LTP 03
VTFD- Hotspot	VES-13	Kawaguchi, S.	Variable speed drives	ERD LTP 03
TFD	TFD	Kawaguchi, S.	Air stripper motor starters	ERD LTP 01

ERD Lockout/Tagout Program
Equipment List

			Control systems	ERD LTP 01
			Variable speed drives	ERD LTP 03
			Pipeline motor starters	ERD LTP 01
TFD-East	PTU-08	Kidd, B.	Furnas Motor Control Center	ERD LTP 01
			Well pump connections	ERD LTP 01
TFD-South	PTU-02	Kidd, B.	Furnas Motor Control Center	ERD LTP 01
			Well pump connections	ERD LTP 01
TFD-Southshore	PTU-12	Kidd, B.	Furnas Motor Control Center	ERD LTP 01
			Well pump connections	ERD LTP 01
TF5475-1	CRD-01	Kidd, B.	Control system	ERD LTP 01, LTP 09
			Variable speed drives	ERD LTP 03
TF5475-3	CRD-02	Kidd, B.	Control system	ERD LTP 01
			Variable speed drives	ERD LTP 03
VTF5475	VES-01	Kidd, B.	Variable speed drives	ERD LTP 03
Hydraulic testing	PTU-04	Mitchell, B.	Furnas Motor Control Center	ERD LTP 01
			Generator Operation	ERD LTP 01
			Well pump connections	ERD LTP 01
TFD/SE	PTU-11	Thomas, S	Furnas Motor Control Center	ERD LTP 01
			Well pump connections	ERD LTP 01
VTFD ETC-S	VES-11	Thomas, S	Variable speed drives	ERD LTP 03
VTFE/ELM	VES-05	Thomas, S	QED motor control system	ERD LTP 01
VTF518	VES-10	Thomas, S	QED motor control system	ERD LTP 01

ERD Lockout/Tagout Program
Equipment List

VTFE-Hots	VES-12	Thomas, S.	Variable speed drives	ERD LTP 03
TFC	TFC	Van Noy, H.	Air stripper motor starters	ERD LTP 01, LTP 02
			Control systems	ERD LTP 01
			Pipeline motor starters	ERD LTP 01
			Variable speed drives	ERD LTP 03
			Well 701	ERD LTP 01
TFC-Southeast	PTU-01	Van Noy, H.	Furnas Motor Control Center	ERD LTP 01
			Well pump connections	ERD LTP 01
TFC-East	MTU-01	Van Noy, H.	ERD designed motor control center	ERD LTP 01
			Well pump connections	ERD LTP 01
TFD Helipad	PTU-10	Van Noy, H.	Furnas Motor Control Center	ERD LTP 01
			Generator Operation	ERD LTP 01
			Well pump connections	ERD LTP 01
VTFD Helipad	VES-07	Van Noy, H.	Variable speed drives	ERD LTP 03
TF5475-2	STU-05	Van Noy, H.	AC power to battery charger	ERD LTP 01
TFE/SE	MTU-04	White D.	ERD designed motor control center	ERD LTP 01
			Well pump connections	ERD LTP 01
TFA	STU-06	White, D.	Low voltage DC system	ERD LTP 01
TFD-West	PTU-06	White, D.	Furnas Motor Control Center	ERD LTP 01
			Well pump connections	ERD LTP 01
	STU-10	White, D.	Low voltage DC system	ERD LTP 01

ERD Lockout/Tagout Program
Equipment List

TFE/SW	MTU-03	White, D.	ERD designed motor control center	ERD LTP 01
			Well pump connections	ERD LTP 01
	STU-09	White, D.	Low voltage DC system	ERD LTP 01
			Well pump connections	ERD LTP 01
TFE-W	MTU-05	White, D.	ERD designed motor control center	ERD LTP 01
			Well pump connections	ERD LTP 01
TF406	PTU-05	White, D.	Furnas motor control center	ERD LTP 01
			Well pump connections	ERD LTP 01
TF518-North	STU-09	White, D.	AC power to battery charger	ERD LTP 01
VTF406	VES-08	Thomas, S.	QED motor control system	ERD LTP 01
TFE Yard	various	Project	Treatment Unit Testing	ERD LTP 01
			Variable speed drives	ERD LTP 03
B438	various	Project	Treatment Unit Testing	ERD LTP 01
			Variable speed drives	ERD LTP 03

Attachment D

Example
Self-Assessment Checklist

LOTO Authorized Worker Knowledge	Yes	No
Has the authorized worker received the required training?		
Can the authorized worker demonstrate knowledge about the LOTO Program?		
Can the authorized worker demonstrate knowledge about the appropriate lock and tag devices?		
Can the authorized worker demonstrate knowledge about the location of all energy-isolating devices?		
Can the authorized worker demonstrate knowledge about any (or all) secondary or residual energies?		
Can the authorized worker demonstrate knowledge about the energy-isolation verification procedures?		
Can the authorized worker demonstrate knowledge about the necessary procedures, if the equipment does not have a lockable energy-isolating device?		
Can the authorized worker demonstrate knowledge about the log-keeping requirements?		
Lock and Tag Devices		
Are there an adequate number of locks and tags?		
Are the locks properly labeled?		
Are the LLNL danger tags the correct version?		
Is a LOTO log available and current?		
Are copies of the applicable energy control procedures available?		
Equipment		
Are energy-isolating devices properly labeled?		
Are energy-isolating devices lockable?		
Are energy-isolating devices (other than electrical) required for lockout and tag (e.g., valves)?		
Are valves adequately identified, and are suitable locking devices available?		
Are other devices required for lockout and tag, and are these devices available?		

Attachment E

Example
LOTO Authorized Worker List

LOTO-authorized worker	General Instruction			Specific Procedures				
	SOP Review	HS5245-RW Due	OJT Due	LTP 01 10/26/99 Single point	LTP 02 07/27/00 Multi point	LTP 03 11/04/99 VFD	LTP 07 01/04/00 TFA west	LTP 09 03/14/00 CRD1
Mack, Greg	9/13/05	9/30/10	12/31/05	11/30/05	11/30/05	11/30/05	11/30/05	11/30/05
Soto, Greg	9/13/05	7/23/09	12/31/05	11/30/05	11/30/05	11/30/05	11/30/05	11/30/05
Metzger, George A.	05/23/04	6/8/06	12/31/05	11/30/05	11/30/05	11/30/05	11/30/05	11/30/05
Truelsen, Lenard R.	05/23/04	10/14/07	12/31/05	11/30/05	11/30/05	11/30/05	11/30/05	11/30/05
Van Fossen, John H.	05/23/04	10/24/06	12/31/05	11/30/05	11/30/05	11/30/05	11/30/05	11/30/05

Attachment F

Example
Lockout/Tagout Inspection Form

ERD LOTO Program
LOTO Inspection Form

This form shall be completed by the work supervisor (or a designated authorized worker) who inspected the authorized worker's use of LOTO procedures. The work supervisor acknowledges performance of the inspection of this form.

Date_____

1. List the equipment /machines on which the LOTO procedure is being used.
   _____
   _____
   _____

2. Provide the names of the authorized workers who performed the LOTO procedure for this inspection.

   _____ _____

   _____ _____

3 Identify any discrepancies uncovered by completing the LOTO Procedure Self-Assessment Checklist. List any corrective actions.
   _____
   _____
   _____
   _____
   _____

_____ _____
Signature of inspector Date

_____ _____
Signature of work supervisor Date

Attachment G

Example
ERD LTP-01:
General Single-Point Lockout Procedure

ERD Lockout/Tag Program

General Single-Point Lockout Procedure

ERD LTP 01 rev. 02/24/06

This procedure is to be used to lockout/tagout single-point equipment used in the various treatment facilities. This procedure requires that the LOTO- authorized worker be familiar with the normal operation of the equipment and understands the consequence of shutdown and maintenance. Specifically, drain-back, siphoning, tank overflow and similar events that can occur when equipment is removed from service.

REMOVING EQUIIPMENT FROM SERVICE

- ❑ Notify all affected workers that a lockout is required and the reason why.
- ❑ Shutdown equipment using normal procedures.
- ❑ Operate the switch, valve, circuit breaker, or other energy-isolating device so that the energy source is disconnected or isolated from the equipment
- ❑ Lockout the energy-isolating devices with an assigned lock.
- ❑ Check that the equipment is indeed disconnected. Use a voltmeter to check any electrical systems. Measure line-to-line, line to ground, and line to neutral or common. Test the voltmeter before and after the check.
- ❑ Fill out tags and attach to the switch, valve, or circuit breaker.
- ❑ Enter the requested information in the Lockout/Tag Log Book.
- ❑ Retain possession of the key.
- ❑ The equipment is now locked out.

RESTORING EQUIPMENT TO SERVICE

- ❑ Notify all affected workers that a lockout is ready to be removed.
- ❑ Verify that the work is complete and the system is safe to re-energize.
- ❑ When the equipment and personnel are clear, remove all locks. The energy-isolating devices may now be operated to restore the energy to the equipment.
- ❑ Return the lock and key to the key control rack.
- ❑ Sign the *Removed Date* portion of the Lockout/Tag Log Book.

Adapted from the LLNL ES&H Manual volume II, Document 12.6 dated September 15, 2003

Attachment H

Example
ERD LTP-02:
Multi-Point Lockout Procedure

ERD Lockout/Tag Program

Multi-Point Lockout Procedure

ERD LTP 02 rev. 02/24/06

This procedure is to be used to lockout/tag multi-point equipment that are used in the treatment facilities TFA, TFB, TFC, and TFD. This procedure requires that the authorized worker be familiar with the normal operation of the equipment and understands the consequence of shutdown and maintenance. Specifically, drain-back, siphoning, tank overflow and similar events that can occur when the equipment is removed from service.

Also, the lockout/tagout of complicated electrical systems is considered work on energized equipment and is therefore classified as a Class 3 hazard until the lockout is completed. As a minimum, both an authorized worker and a safety watch shall work together when this type of work is being performed.

REMOVING EQUIIPMENT FROM SERVICE

- ❑ Notify all affected workers that a lockout is required and the reason why.
- ❑ Shutdown equipment using normal procedures.
- ❑ Operate the switches, valves, circuit breakers, or other energy-isolating devices so that the energy source is disconnected or isolated from the equipment. Be aware that this procedure is being executed because there are multiple power sources present and requires testing, and verification of all possible sources of energy connected to the equipment being locked out.
- ❑ Lockout the energy-isolating devices with the assigned locks.
- ❑ Check that the equipment is indeed disconnected. Use a voltmeter to check any electrical systems. Measure line-to-line, line to ground, and line to neutral or common. Test the voltmeter before and after the check.
- ❑ Fill out tags and attach to the switches, plugs, or circuit breakers.
- ❑ Enter the requested information in the Lockout/Tag Log Book.
- ❑ Retain possession of the key.
- ❑ The equipment is now locked out.

RESTORING EQUIPMENT TO SERVICE

- ❑ Notify all affected workers that a lockout is ready to be removed.
- ❑ Verify the work is complete and the system is safe to re-energize.
- ❑ When the equipment and personnel are clear, remove all locks. The energy-isolating devices may now be operated to restore the energy to the equipment.
- ❑ Return the locks and keys to the key control rack.
- ❑ Sign the *Removed Date* portion of the Lockout/Tag Log Book.

Shutdown Executed by: _____ Date_____

Co-worker_____

Date returned to service_____

Adapted from the LLNL ES&H Manual Volume II, Document 12.6 dated September 15, 2003

Attachment I

Example Procedures List

Procedures	Name	Current Revision
ERD LTP 01	General Single-Point Lockout Procedure	10/26/99
ERD LTP 02	Multi-Point Lockout Procedure	10/26/99
ERD LTP 03	Variable Frequency Drive Lockout Procedure	10/26/99
ERD LTP 06	TFA South Wells Lockout Procedure	10/26/99
ERD LTP 07	TFA West Wells Lockout Procedure	10/26/99
ERD LTP 99	Special Lock Removal Procedure	10/26/99

LLNL Environmental Restoration Division (ERD)
Standard Operating Procedure (SOP)

ERD SOP 4.17: Change of Aqueous and Vapor Phase Granular Activated Carbon—Revision: 1

AUTHOR(S):
S. Gregory, B. Daily

ENVIRONMENTAL RESTORATION DIVISION
CONTROLLED COPY
#
THIS IS A RED STAMP
ERD

APPROVALS: **Date**

Jesse Yow — 8/30/06
Division Leader

Ed Folan — 7-27-06
Engineering and Operations Group Leader

CONCURRENCE: **Date**

Rebecca Goodrich — 8/7/06
QA Implementation Coordinator

1.0 PURPOSE

The purpose of this SOP is to provide guidelines to the operators of ground water treatment and vapor extraction units, namely, granular activated carbon (GAC) Treatment Units (GTUs), Solar Treatment Units (STUs), and fixed treatment facilities that employ GAC as to when the aqueous or vapor phase GAC canisters of the treatment units should be changed.

2.0 APPLICABILITY

This procedure is applicable to all portable treatment units (GTUs and STUs), and fixed treatment facilities at the LLNL sites, where three or more canisters/tanks of aqueous or vapor phase GAC canisters are employed in series, to remove primarily VOCs from extracted ground water or vapor. The same technique may be applied to other contaminants. ERD work activities are conducted within the framework of the institutional Integrated Safety Management System (ISMS). The Environmental Management System (EMS) is a component of the ISMS, which is also supported during the planning, performing, and evaluation of the work processes. This SOP should be reviewed periodically and/or in conjunction with GAC change outs. However, this document does not replace engineering and regulatory oversight by management, the facility engineer, or the facility compliance manager, for site specific irregularities and conditions.

3.0 REFERENCES

3.1 Operations and Maintenance Manual Volume I: Treatment Facility Quality Assurance and Documentation (Common to all facilities).

3.2 Carbon Adsorption, Ground Water Treatment Technologies, Environmental Hazard Management Program, University of California Extension, Spring Quarter 1990.

4.0 DEFINITIONS

See SOP Glossary.

5.0 RESPONSIBILITIES

5.1 Division Leader (DL)

The Division Leader's responsibility is to ensure that all activities performed by ERD at the Livermore Site and Site 300 are performed safely and comply with all pertinent regulations and procedures, and provide the necessary equipment and resources to accomplish the tasks described in this procedure.

5.2 Project Leader (PL)

The PL's responsibility is to ensure that all activities are performed safely and comply with all pertinent regulations and procedures, work is authorized through an Integration Work Sheet (IWS), and there is sufficient funding to initiate the work.

5.3 Engineering and Operations Group Leader (EOGL)

The EOGL's responsibility is to ensure that proper procedures are followed for activities (e.g., construction, activation, facility operation and sampling).

5.4 Site Safety Officer (SSO)

The SSO's responsibility is to ensure safe facility operations and that the work is performed in compliance with applicable IWSs, Site Safety Plans, SOPs, and any other applicable safety related documentation. This position primarily applies to Site 300 treatment facility operations. At the Livermore Site, these tasks are performed by the FE & FO or other personnel as assigned.

5.5 Facility Compliance Manager (FMC)

The FMC is responsible for compliance monitoring of the treatment facility including tracking compliance of the facility, alerting the facility engineer when corrective action may be required, directing the Facility Operator (FO) to shut down the facility and/or perform additional sampling, and assisting the facility operator when additional sampling or monitoring is required.

5.6 Facility Engineer (FE)

The FE is responsible for the design, fabrication, construction, start-up, operation, optimization, and maintenance in all technical matters pertaining to the facility including directing corrective action. The FE ensures the facility meets the criteria set forth in the

design specifications, building codes, and regulatory requirements. The FE is assisted by the Facility Operator (FO) and/or the Facility Compliance Manager (FMC).

5.7 Facility Operator (FO)

The FO is responsible for safe operations of the facility including sampling and observing QA requirements in accordance with this document and other documents in Section 3.0 *References.* The FO monitors facility compliance, notifies the FE of maintenance, adjustment operational non-compliance or other important issues. The FO performs corrective action as necessary.

6.0 PROCEDURES

6.1 Preparation

6.1.1 Prior to conducting work, perform the applicable preparation activities described in SOP 4.1, "General Instructions for Field Personnel". Personnel who are new to the LLNL project will receive direct field supervision and on-the-job training (OJT) from a Subject Matter Expert (SME) for at least the first 24 hours of field activity using the ERD Field Investigation Orientation Lesson Plan (course number EP7033-05).

6.2 Safety Considerations

6.2.1 To ensure safety to the workers and the environment, the procedures described in the following sections will be conducted in accordance with LLNL IWS 11893 "Recycling Spent Activated Carbon by Contractor at the Livermore Site" and IWS 11346 "Recycling Spent Activated Carbon by Contractor" at Site 300. All work performed at ERD's treatment facilities shall also be conducted in accordance with IWS 11534 "Treatability Testing and Related Activities" at the Livermore Site and IWS 11341 "Ground Water and Soil Vapor Treatment Facility Operations at Site 300."

6.3 Monitoring Frequency

The FE should have an estimate as to when breakthrough of GAC will occur. For aqueous phase GAC, lb/day can be calculated for each of the VOCs using standard isotherm models. However, actual breakthrough may vary significantly due to other factors. Therefore, the monitoring of breakthrough by sampling GAC vessel effluent shall be conducted in accordance with the procedure presented below:

6.3.1 The time interval between samples taken at the designated breakthrough monitoring point shall be calculated in the following manner:

Sampling Interval (days) = [estimated adjacent downstream GAC canister capacity (days) ÷ safety factor)] – sample turn-around time (days). The safety factor is to be "1.5".

6.3.2 Operational experience for an individual facility will replace the calculation of breakthrough, once a breakthrough pattern has been identified.

Note: When necessary, use of on site analysis or rush analysis can increase the monitoring interval (i.e., decrease monitoring frequency).

6.3.3 For vapor phase GAC, the monitoring frequency is specified by the BAAQMD for the Livermore Site or SJVUAPCD for Site 300 operations. The vapor monitoring is conducted using an Organic Vapor Analyzer (OVA) or a Thermo Vapor Analyzer (TVA) to determine when GAC change-out is required.

6.4 Criteria for Change

Whenever possible, spent GAC is regenerated by a subcontracted vendor. Regeneration is preferred over disposal, but when GAC is determined to be a hazardous waste (through the profiling sampling process) it is generally disposed of through RHWM rather than being regenerated. GAC profile sampling needs to be performed at a frequency dictated by the RHWM or the GAC vendor, and should be done in advance of expected breakthrough to limit down time of the facility. A sample waste profile form is included as Attachment A.

6.5 Replacement Procedure

6.5.1 Portable Aqueous Phase GAC Canisters

6.5.1.1 Upon breakthrough at the influent sample port of next to the last GAC vessel, all upstream vessels should be removed and replaced. The last vessel should be moved to the first position and new GAC vessels placed in the remaining positions. Attachment B: Sequence of Change in GAC Canisters, illustrates the movement of GAC canisters during the change-out process.

6.5.1.2 The spent canisters from different facilities should be stored in one place. When there is at least 1,000 lb of GAC, the vendor or RHWM shall be contracted to remove the spent GAC from the site. The GAC supply vendor may re-supply new GAC at this time.

6.5.2 Portable Vapor Phase GAC Vessels

6.5.2.1 The concentration of the vapor sample taken from the influent sample port of next to last GAC vessel shall indicate the initiation of the vapor phase GAC change-out procedure in accordance with air permit specifications. When the concentration at this location reaches the greater of 10% of the total inlet vapor stream concentration (ppmv), or 10 ppmv (this criteria is specified only in the Livermore permits; there are no change-out specifications in the Site 300 permits). At such time all GAC vessels should be removed and replaced.

6.5.3 Fixed GAC Canisters

6.5.3.1 The concentration of the vapor sample taken from the influent sample port of next to last GAC vessel shall indicate the initiation of the vapor phase GAC change-out procedure in accordance with air permit specifications. When the concentration at this location reaches the greater of 10% of the total inlet vapor stream concentration (ppmv), or 10 ppmv (this criteria is specified only in the Livermore permits; there are no change-out specifications in the Site 300 permits); at such time all GAC vessels should be removed and replaced.

6.5.3.2 Spent GAC from the fixed vessels should follow the same replacement procedure as the portable vessels with the addition that the change-out is completed by the GAC supplier and new GAC is replaced at the same time.

6.5.3.3 The FE or FCM may request that disposal or regeneration of GAC from the last vessel be postponed until the next change-out based on the break through concentrations.

6.4 Documentation Requirements

6.4.1 Keep a record of the concentration of the total VOCs at all sample ports and the date the facility was shut down in the logbook. Also note the date when the canisters were changed and the date when the facility was restarted. A record should also be kept if GAC waste characterization has been conducted, and a schedule set for future characterization sampling.

7.0 QA RECORDS

7.1 Treatment Facility Logbooks

A logbook issued for the facility, by the Data Management Team (DMT), shall be maintained by the FO who shall record the dates and time of all important events, namely, shutdown, startup, date of sampling, sample port numbers, results of the chemical tests and any other important observations.

7.2 Chain-of-Custody (CoC)

The FO shall generate sampling information on the CoC form issued by the DMT of the ERD. The FO will indicate on the CoC that the FCM and/or FE are to receive faxed preliminary data.

8.0 ATTACHMENTS

Attachment A: Spent Carbon Profile Form
Attachment B: Sequence of Change in GAC Canisters

Attachment A

Spent Carbon Profile Form

USFilter Westates

PARKER FACILITY
2523 Mutahar Street • P.O. Box 3308
Parker, AZ 85344
(928) 669-5758 • FAX (928) 669-5775
EPA ID: AZD 982 441 263

RED BLUFF FACILITY
11711 Reading Road
Red Bluff, CA 96080
(530) 527-2664 • FAX (530) 527-0544
EPA ID: CAR 000 058 784

SPENT CARBON PROFILE FORM

GENERATOR INFORMATION

1. a) Generator: _____ b) Site: _____
Address: _____
Mailing Address: _____
_____
_____
c) Contact Name: _____ d) EPA ID#: _____
e) Phone No: _____ f) Fax No: _____

CONSULTANT INFORMATION

2. a) Consultant: _____ b) Contact: _____
c) Phone No: _____ d) Fax No: _____

PROPERTIES AND COMPOSITION OF THE SPENT CARBON

3. Provide a specific description of the process generating the spent carbon including constituents being treated.
(Please note if application is for potable water or food processing)

_____
_____
_____
_____

4. Type of Spent Carbon: ☐ Aqueous ☐ Vapor 5. Foreign Material: ☐ Yes ☐ No
(rocks, dirt, sand, etc.)

6. Handling: ☐ Bulk ☐ Drum ☐ Adsorber ☐ Bulk Bag ☐ Other _____

7. Free Liquid Range: ☐ 0 ☐ 1 – 15% 8. Liquid Flashpoint: ☐< 140°F ☐ >140°F ☐ N/A Vapor

9. pH Range: ☐ <2 ☐ 2-4 ☐ 4 1-10 5 ☐ >10 5

10. Strong Odor? ☐ Yes ☐ No If yes, please Describe _____

11. Is Spent Carbon Generated at a Subpart FF Facility? (Benzene NESHAP) ☐ Yes ☐ No

12. Does the waste contain benzene which is required to be managed and treated in accordance with the provisions of Subpart FF (40 CFR 61.342(f)(2)? ☐ Yes ☐ No
Note: If yes, total benzene analysis is also required

13. DOES THE SPENT CARBON CONTAIN ANY OF THE FOLLOWING

A. Polychlorinated Biphenyls (PCBs)	☐ Yes	☐ No
B. Dioxins and/or Furans	☐ Yes	☐ No
C. Dibromochloropropane (DBCP)	☐ Yes	☐ No
D. Sulfide or Cyanide	☐ Yes	☐ No
E. Explosive, Pyrophoric and/or Radioactive material	☐ Yes	☐ No
F. Infectious material	☐ Yes	☐ No
G. Shock Sensitive material	☐ Yes	☐ No
H. Oxidizer	☐ Yes	☐ No
I. Heavy Metals	☐ Yes	☐ No

GENERATOR CLASSIFICATION

14 Is the Spent Carbon a **RCRA** Hazardous Waste? ☐ Yes ☐ No
If yes, list waste code(s) below:
RCRA Hazardous Waste requires "11 RCRA" Analysis

_____ _____ _____ _____

_____ _____ _____ _____

15 Is the Spent Carbon a **State** Hazardous Waste? ☐ Yes ☐ No
If yes, list waste code(s) below:

_____ _____ _____ _____

_____ _____ _____ _____

16 Is this Waste Subject to the Land Disposal Restriction Notification? ☐ Yes ☐ No

17 Is spent carbon generated from a Superfund Site? ☐ Yes ☐ No

18 If this is a Renewal, Provide the Existing Profile Approval Number: _____

19 Estimated Annual Carbon Usage: _____

GENERATOR CERTIFICATION

I hereby certify that all information on this and all attached documents are true and that this information accurately describes the subject spent carbon. I further certify that all samples and analyses submitted are representative of the subject spent carbon in accordance with the procedures established in 40 CFR 261 Appendix I or by using an equivalent method. All relevant information regarding known or suspected hazards in the possession of the generator has been disclosed. I authorize USF/Westates to obtain a sample from any waste shipment for purposes of confirmation or further investigation. If I am a consultant signing on behalf of the generator, I have their proper approval.

_____ _____
Printed Name Signature

_____ _____
Title Date

_____
For Internal Use Only

_____
Profile Approval Number

_____
Valid Through

Attachment B

Sequence of Change in GAC canisters

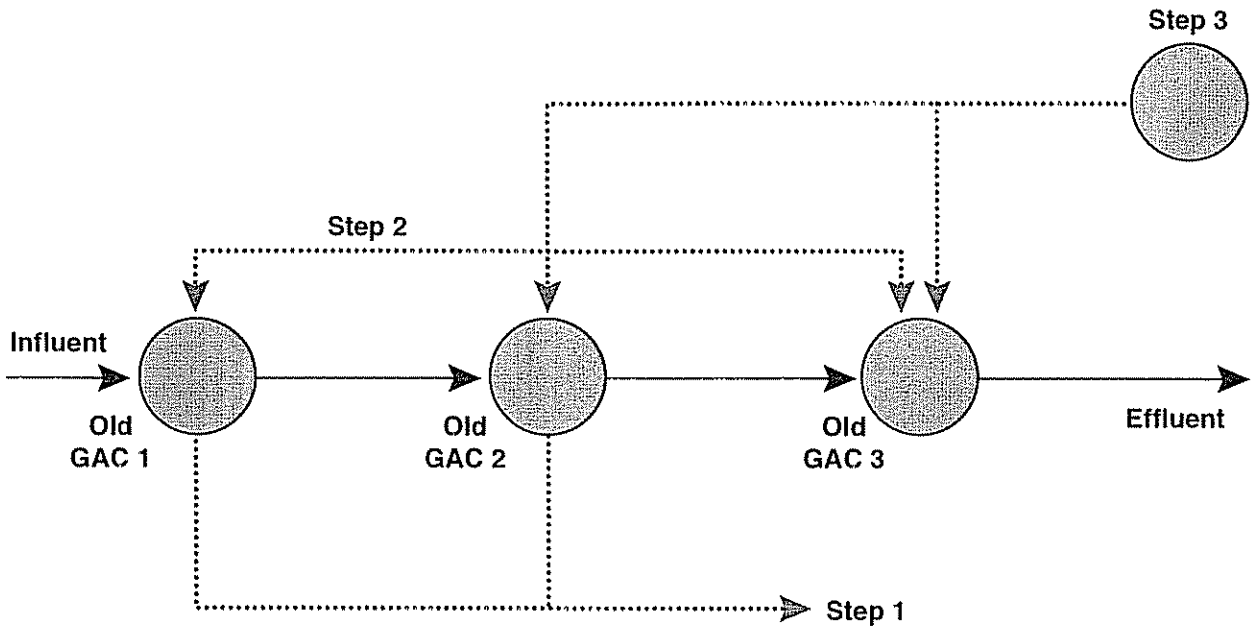

Step 1 – Remove old GAC 1and 2 for regeneration/disposal
Step 2 – Move old GAC 3 to old GAC 1 position
Step 3 – Move new GAC(s) to downsteam position

ERD-S3R-06-0084

Attachment B. Sequence of change in GAC canisters.

LLNL Environmental Restoration Division (ERD)
Standard Operating Procedure (SOP)

ERD SOP 4.18: ERD Document Control—Revision: 0

AUTHOR(S):
V. Dibley

APPROVALS: **Date**

Albert L Lamarre 4/1/03
Division Leader

CONCURRENCE: **Date**

3/28/03
EPD Assurance Manager

Rebecca Goodrich 3/25/03
QA Implementation Coordinator

1.0 PURPOSE

The purpose of this procedure is to describe the processes used to control ERD documents so the most current versions are available to ERD personnel.

2.0 APPLICABILITY

This procedure is applicable to ERD documents that have been identified as needing to be controlled.

3.0 REFERENCES

3.1 Merrigan, J. (2001), *Environmental Protection Department Quality Assurance Management Plan*, Lawrence Livermore National Laboratory, Livermore, CA (UCRL-AR-146357 Rev. 4).

4.0 DEFINITIONS

See SOP Glossary.

5.0 RESPONSIBILITIES

5.1 Division Leader

The Division Leader's responsibility is to ensure that procedures are current and readily available to activity personnel, appropriate to their use (i.e., office versus field use, reference versus instructional use) and that documents are controlled in a manner that is consistent with the requirements described in this procedure.

5.2 ERD Quality Assurance Implementing Coordinator (QAIC)

The QAIC is responsible for coordinating the implementation of division document control processes and for maintaining the ERD Controlled Document Distribution List. The QAIC is also responsible for determining the level of control for ERD documents.

5.3 ERD Group Leaders and Supervisors

The ERD Group Leaders and Supervisors are responsible for providing the ERD QAIC with a list of ERD personnel that require controlled documents based on their work assignments.

5.4 ERD Personnel

ERD Personnel who are custodians of controlled documents are responsible for providing reasonable protection from damage or loss to those documents. ERD personnel are responsible for ensuring that they acquire and use the most current editions of controlled documents. In addition, ERD personnel preparing documents are responsible for consulting with the QAIC to determine control status of the document.

6.0 PROCEDURES

6.1 Identification and Tracking of Controlled Documents

6.1.1 Identification of Controlled Documents

ERD controls documents needed by personnel to perform work correctly and safely. By controlling the document, management ensures the most current version is accessible to workers.

Typically, the documents controlled by ERD are:

- Quality Assurance Project Plans
- Site Safety Plans
- Operation and Maintentance Manuals
- Standard Operating Procedures

The controlled status of documents is identified by marking the document with a red stamp indicating the staus, i.e., uncontrolled or controlled. If the red stamp is black and white, the document is not controlled. If the document has no markings, the document is uncontrolled.

6.1.2 Tracking of Controlled Documents

Within the "Controlled Copy" red stamp, a unique number is used to identify the copy holder.

The QAIC maintains the ERD Controlled Document Distribution List. This List tracks what documents are controlled, the controlled numbers and the associated copy holder names.

6.2 Document Distribution

6.2.1 Distribution Levels

Depending on the document purpose and intended audience, the document may be controlled at the following levels:

- Supervisor and above. At this level the distribution list is usually large and the document has infrequent updates. Affected ERD personnel receive uncontrolled copies. The management staff receives controlled copies and then ensure that the personnel use the correct verson before work commences.
- All applicable personnel. Due to the subject matter, all applicable personnel receive controlled copies. The document usually has frequent updates.

6.2.2 Controlled Document Distribution Procedure

- The Supervisor or Group Leader inform the QAIC of their personnel's controlled document requirements.
- The QAIC assigns the personnel a controlled document/number and enters the information into the ERD Controlled Document Distribution List.
- Upon leaving ERD, the personnel must relinquish their controlled documents to the QAIC.
- The QAIC updates the List.

6.3 Effective Dates

ERD controlled document effective date is listed on the cover of the document (i.e., October 2000).

6.4 Disposition Control

When a controlled document is updated, the QAIC or designee manually updates each copyholder's controlled document. Personnel may update their own controlled documents under the supervision of the QAIC or designee. For controlled document copyholder's outside of ERD, the updated materials are mailed with the LLNL

Environmental Protection Department Environmental Restoration Division Controlled Document Receipt Acknowledgment Record (Attachment A). Obsolete or superseded documents/material are discarded/recycled.

7.0 QUALITY ASSURANCE RECORDS

7.1 Controlled documents

7.2 ERD Controlled Document Distribution List

7.3 LLNL Environmental Protection Department Environmental Restoration Division Controlled Document Receipt Acknowledgment Records

8.0 ATTACHMENTS

Attachment A—Example LLNL Environmental Protection Department Environmental Restoration Division Controlled Document Receipt Acknowledgment Record

Attachment A

Example LLNL Environmental Protection Department Environmental Restoration Division Controlled Document Receipt Acknowledgment Record

LLNL Environmental Protection Department
Environmental Restoration Division
Controlled Document Receipt Acknowledgment Record

Transmittal Date:_____

From:_____
ERD Quality Assurance Implementing Coordinator (QAIC)

To:_____

Document Title:_____

Document Revision Number:_____

Document Identification Number:_____

Directions

[ ] Destroy or Mark Obsolete Materials "Superseded"
[ ] Return Obsolete Materials with this Record
[ ] New Issue- No Obsolete Material

Please sign below and return this form within 30 days to:
Rebecca Goodrich
LLNL
P.O. Box 808, L-528

Signature:_____ Date:_____

LLNL Environmental Restoration Department (ERD)
Standard Operating Procedure (SOP)

ERD SOP 5.1: Data Management Chain of Custody and Printed Analytical Result Receipt and Processing—Revision: 3

AUTHOR(S):
S. Chamberlain and C. Cook*

ENVIRONMENTAL RESTORATION DEPARTMENT
CONTROLLED COPY
_____
THIS IS A RED STAMP
ERD

APPROVALS:	Date
Department Manager	3/9/09
Hydrogeology & Decision Support Division Leader	1/26/09

CONCURRENCE:	Date
QA Implementation Coordinator	3/9/09

Type of Procedure (per ES&H Manual, Document 3.4)

☒ Informational Use ☐ General Use ☐ Continuous Use

*IAP

1.0 PURPOSE

The purpose of this procedure is to describe the process for receiving and storing printed Chain-of-Custody (CoC) forms received from field personnel and analytical laboratories.

2.0 APPLICABILITY

This procedure includes receiving, photocopying, distributing, and storing printed analytical results and ensures complete and consistent handling of all CoC forms and printed analytical results within the ERD Data Management Team (DMT). ERD work activities are conducted within the framework of the institutional Integrated Safety Management System (ISMS). The

Environmental Management System (EMS) is a component of the ISMS, which is also supported during the planning, performing, and evaluation of the work processes.

3.0 REFERENCES

Not applicable.

4.0 DEFINITIONS

See SOP Glossary.

5.0 RESPONSIBILITIES

5.1 Department Manager (DM)

The DM's responsibility is to ensure that all activities performed by ERD at the Livermore Site and Site 300 are performed safely and comply with all pertinent regulations and procedures, and provide the necessary equipment and resources to accomplish the tasks described in this procedure.

5.2 Division Leader (DL)

The PL's responsibility is to ensure that all activities are performed safely and comply with all pertinent regulations and procedures, work is authorized through an Integration Work Sheet (IWS), and there is sufficient funding to initiate the work.

5.3 Hydrogeology & Decision Support Division Leader (HDSDL)

The HDSDL's responsibility is to ensure that proper procedures are followed and activities are conducted safely, consistently, and adequately.

5.4 ERD Data Management Team (DMT)

The DMT is responsible for receiving and processing CoC forms prior to receiving analytical results as outlined in this SOP. When DMT receives analytical results, they are also responsible for processing them according to this procedure. The DMT also communicates with the analytical laboratories regarding corrections or adjustments to CoC requests and when necessary provides clarification or additional information to ensure completeness in analytical result reports.

5.5 Contract Analytical Laboratories (CALs)

The CALs are responsible for performing analyses for each sample specified on the CoC form within the requested time period and taking action if necessary to clarify requests. Analytical laboratories are responsible for submitting copies of CoC forms upon sample receipt and for submitting original CoC forms with hard copy original analytical results within specified time periods to ERD's DMT. The analytical laboratories are also

responsible for making corrections or revisions to hard copy original reports requested by the DMT or the QC Chemist.

6.0 PROCEDURES

6.1 Receipt of Chains-of-Custody (Attachments A and B)

CoCs are in triplicate form and are processed as follows:

1) The original CoC is signed and accompanies the samples to the analytical lab.
2) The CoC receipt copy is submitted to DMT.
3) The Technical Release Representative (TRR) copy is submitted to the TRR.

6.1.1 CoC receipt copies are obtained from field personnel through lab mail and/or environmental sample lock box.

6.1.2 CoC receipt copies are date-stamped and categorized according to the analytical lab performing the analyses. The forms are filed according to the date and placed in the corresponding lab's inbox.

6.2 Receipt of Original Hardcopy Results

6.2.1 Obtain the analytical reports from the incoming mail or the environmental sample lock box.

6.2.2 Date stamp the analytical report; specifically the CoC, the invoice, and the case narrative. Identify Water Guidance and Monitoring Group (WGMG) data with a red flag to alert the QC Chemist to expedite validation.

6.2.3 Photocopy the original CoC to accompany the analytical report. Additionally, for WGMG data, make a copy of the invoice to accompany the data package.

6.2.4 Match the analytical results received to the analysis requested on the original CoC; highlight each requested analysis received. Record the "Analytical Lab Log #" in the blank provided on the CoC, (e.g., BC Laboratory: BB0704705 ***001***). Initial the case narrative when you have matched all records.

6.2.5 Identify any collocated intralaboratory (blind) samples (if any) throughout the analytical report. Label results with the stamp, "This is Really _____" and add the actual sample location identification based on the QC sample list provided for that quarter and year.

6.2.6 Place the analytical report, with the photo copied CoC attached on top, in the "Validation In Box" or deliver results to the QC Chemist for validation.

6.3 Receiving Results in Database

6.3.1 Receive data

Log into Taurus Environmental Information Management System (TEIMS) "Data Team" application and access "SPACT." Go to "View CoCs and Labels." Under "Find CoC By Number or ID," enter the CoC ID or the Log Book/Document Control #. Click "View COC List."

On the next page, identify the CoC you are going to enter (verifying one or more of the following: "Document Control Number," "CoC ID," "Labcode," "Sampler," "Field Location," or "Sampled").

If no electronic records are found, create a CoC per instructions provided in Section 6.4 of this procedure.

Click "Receive Data" under "CoC Action." On this page, edit the following fields:

- date_logged: always the date work is logged into the system
- lab_log_no: number assigned from the analytical lab
- sample_rcvd: date the analytical lab received the sample
- custodian: individual responsible for processing the EDD for that particular lab
- coc_rcvd: delete "SYSDATE"
- custodian_date: date DMT received data back from analytical lab
- invoiced: left for QC Chemist
- validator: left for QC Chemist
- validated (date): left for QC Chemist
- valid_status: left for QC Chemist
- dq_flag: left for QC Chemist
- rev_requestor: individual(s) requesting a revision
- rev_requested:
- log_comments: field usually for QC Chemist, but notes can be added here regarding CoC

Verify that "lab_loc_name" matches what is on the CoC. Verify that the requested analysis is correct and all samples are in the right order.

- log_no (extension only on input): enter the extension to the lab_log_no given by the analytical lab

- result_rcvd_paper: date DMT received results from the analytical lab
- result_rcvd_edd: populated when the EDD is uploaded by the custodian

Repeat entering the log_no(s) as needed for all rows being received on that CoC. Once this is complete, click the "Submit" button.

Once original CoCs are returned from the lab along with the analytical results, the matching CoC receipt is discarded. File the original CoC form by analytical lab and date. Binders are maintained as a Lifetime QA Record.

6.4 Creating a Hand Entry CoC

6.4.1 If no electronic records are found, an electronic CoC must be created.

6.4.2 Select "View CoC and Labels" from the "SPACT" application. Enter Log Book/Document Control # and verify that records do not exist. If records exist, verify the access number by clicking "View/Edit." Do not create a new CoC if it is the same access number.

6.4.3 If records do not exist, click your back button, and select "Change Query." This takes you back to "Find CoCs to View/Edit/Print." Click on the link "Create Hand Entry CoC."

6.4.4 Using information from the CoC, enter appropriate "# of lines" and "driver_code." Skip "op_unit" if you are unsure of it, and verify that the default "norm_year" and "norm_qtr" are correct. Do not click the "Advanced Entry" box. Click the "Submit" button.

6.4.5 Enter/Update all of the required fields, using the hand entry CoC:

- Access #
- Analytical Lab
- Log Book/Document Control #
- Turn Around Time
- Sampler
- LLNL Acct #
- Release # (if applicable)
- Fax/Email #1 and #2 (if applicable)
- DMT Additional Copies (if applicable)
- Verify that Plan Code is correct from what you selected on the previous page
- Field location
- Sample ID (Lab Loc Name)

- Sampled (date)
- Matrix
- Req. Analysis
- Analysis Detail (if applicable)
- Sample Type
- Sample Method (if applicable)
- Lab Instructions (if applicable)

6.4.6 Click on "Create CoC."

6.4.7 On the next page, verify that all fields are correct and click "Create CoC." If it is not correct, click your back button and fix the error before resubmitting.

6.4.8 Process as in Section 6.3.

6.5 Processing Original Results After Validation

6.5.1 Retrieve data packages from the "Validation Out Box."

6.5.2 Stamp data with "Data Qualifier Flag Attached" when the QC Chemist has added a colored Data Qualifier Flag form. When the package is a revision, it needs to be stamped with "Revision" stamp.

6.5.3 Determine the packages requiring copies for the following uses:

- Individuals listed in the "DMT Additional Copies" box on the CoC.
- For WGMG ORAD samples, always make a data copy for the appropriate analyst. Make sure a photocopy of the invoice is attached to these copies.

6.5.4 Copy the complete package.

6.5.5 Send customers copies through the Laboratory mail or hand deliver if necessary.

6.5.6 Staple package together and place the originals in the appropriate lab data box for the custodian to retrieve when necessary.

7.0 QA RECORDS

7.1 Official hardcopy analytical laboratory reports

7.2 Chain-of-Custody forms

7.3 ERD Controlled Field Logbooks

8.0 ATTACHMENTS

Attachment A—ERD Electronic Chain-of-Custody forms (A-1, A-2, A-3)
Attachment B—ERD Hand Entry Chain-of-Custody form

Attachment A

ERD Electronic Chain-of-Custody Forms

A-1: Original COC

A-2: COC Receipt Copy

A-3: TRR Copy

Chain of Custody

Attn: ERD Data Management Team
Lawrence Livermore National Laboratory
P.O. Box 808 L-542
Livermore, CA 94551

Work Authorized By: LINDEE BERG
TRR Approver: SUSAN LAMBAREN
Project Info:

Access/COC #: 44231
Document Control #: WW024
Requester/LLNL Analyst: Livermore
Organization / Sampler: ERD / silva207
PCI Project #: 32572
PCI Task #: 484709
Fax/Email #1: 925-422-2095
DMT Additional Copies:

Analytical Lab : BCLABS-BAK
TAT: 20d
Analytical Lab Log #:
Project/Network: LGIV
LLNL Acct #: 4847-09
Release #: UNICARD
Fax/Email #2:

Additional Instructions:

Sample ID	Sampled Date/Time	Matrix	Cont. Type	Cont. Count	Study Area	Req. Analysis	Analysis Detail	Lab Instructions
W-1502	10/22/2008 07:28	GW	V	3	TFD	E601	ALL	
W-1804-1	10/22/2008 07:28	GW	V	3	TFD	E601	ALL	
W-1804-2	10/22/2008 07:28	GW	V	3	TFD	E601	ALL	
TRIPBLANK	10/22/2008 07:28	BW	V	1	TFD	E601	ALL	Run only if there is a hit

Relinquished Signature	Company	Date	Time	Received Signature	Company	Date	Time
1	LLNL/ERD	10/22/2008		2			
2				3			
3				4			
4				5			

Chain of Custody

Attn: ERD Data Management Team
Lawrence Livermore National Laboratory
P.O. Box 808 L-542
Livermore, CA 94551

Work Authorized By: LINDEE BERG
TRR Approver: SUSAN LAMBAREN
Project Info:

Access/COC #: 44231
Document Control #: WW024
Requester/LLNL Analyst: Livermore
Organization / Sampler: ERD / silva207
PCI Project #: 32572
PCI Task #: 484709
Fax/Email #1: 925-422-2095
DMT Additional Copies:

Analytical Lab : BCLABS-BAK
TAT: 20d
Analytical Lab Log #:
Project/Network: LGIV
LLNL Acct #: 4847-09
Release #: UNICARD
Fax/Email #2:

Additional Instructions:

Sample ID	Sampled Date/Time	Matrix	Cont. Type	Cont. Count	Study Area	Req. Analysis	Analysis Detail	Lab Instructions
W-1502	10/22/2008 07:28	GW	V	3	TFD	E601	ALL	
W-1804-1	10/22/2008 07:28	GW	V	3	TFD	E601	ALL	
W-1804-2	10/22/2008 07:28	GW	V	3	TFD	E601	ALL	
TRIPBLANK	10/22/2008 07:28	BW	V	1	TFD	E601	ALL	Run only if there is a hit

DRAFT

Relinquished Signature	Company	Date	Time	Received Signature	Company	Date	Time
1	LLNL/ERD	10/22/2008		2			
2				3			
3				4			
4				5			

Chain of Custody

Attn: ERD Data Management Team
Lawrence Livermore National Laboratory
P.O. Box 808 L-542
Livermore, CA 94551

Work Authorized By: LINDEE BERG
TRR Approver: SUSAN LAMBAREN
Project Info:

Access/COC #: 44231
Document Control #: WW024
Requester/LLNL Analyst: Livermore
Organization / Sampler: ERD / silva207
PCI Project #: 32572
PCI Task #: 484709
Fax/Email #1: 925-422-2095
DMT Additional Copies:

Analytical Lab : BCLABS-BAK
TAT: 20d
Analytical Lab Log #:
Project/Network: LGIV
LLNL Acct #: 4847-09
Release #: UNICARD
Fax/Email #2:

Additional Instructions:

Sample ID	Sampled Date/Time	Matrix	Cont. Type	Cont. Count	Study Area	Req. Analysis	Analysis Detail	Lab Instructions
W-1502	10/22/2008 07:28	GW	V	3	TFD	E601	ALL	
W-1804-1	10/22/2008 07:28	GW	V	3	TFD	E601	ALL	
W-1804-2	10/22/2008 07:28	GW	V	3	TFD	E601	ALL	
TRIPBLANK	10/22/2008 07:28	BW	V	1	TFD	E601	ALL	Run only if there is a hit

TERRA COPY

Relinquished Signature	Company	Date	Time	Received Signature	Company	Date	Time
1	LLNL/ERD	10/22/2008		2			
2				3			
3				4			
4				5			

Attachment B

ERD Hand Entry Chain-of-Custody Form

Chain-of-Custody Record and Analytic Instructions

Page _____ of _____ AE 24886

Send all results to:

Requester:

Attn: ERD Data Management Team L-528
Lawrence Livermore National Laboratory
P.O. Box 808, Livermore, CA 94551

ERD
Electronic Form

Field Log Book# (COC#) _____ **Release #** _____
LLNL Acct. # _____ Sampling Request# _____
Analytical Laboratory Name _____
Analytical Laboratory Log # _____

Analytical Lab FAX or Email copies to:
Name_____FAX 925-422-6950☐ or Email☐
Name_____FAX 925-422-6950☐ or Email☐
✻ **Analytical Laboratory, when Email is requested always ccERD_DMG!**
Project Name:_____
Sampled By _____ Sampler's Employer_____

Sample Identification	Sample Date/Time	Matrix	Cont [3]	# of Cont.	Study Area	Analysis & Turnaround Required [1]	Additional Instructions to Lab / Remarks

Signature	Company	Time	Date
Relinquished by			
Received by			
Relinquished by			
Received by			
Relinquished by			
Received by			

1. Enter the number of days or hours for TAT of the official printed report. See Requested Analysis code list for available TAT's for each type of analysis. Example: 24h = 24 hours / 20d = 20 day
2. Sample Matrix Codes: **See list on back of pink copy**
3. Container type codes: **V** = VOA Bottle, **P** = Polyethylene Bottle, **G** = Glass Bottle, **T** = Brass Tube, **B** = Bag, **S** = Stainless Steel Tube, **O** = Other (specify under remarks)

Additional Copies from Data Mngmnt
CC:

Revision 4.2
12-2-99 ERD

White: Laboratory return to ERD Attn. ERD Data Management Team L-528 **Yellow:** Analytical Lab **Pink:** Sampler leave with ERD Attn. ERD Data Management Team L-528 **Gold:** Sampler Leave with TRR

LLNL Environmental Restoration Department (ERD)
Standard Operating Procedure (SOP)

ERD SOP 5.3: Data Management Electronic Analytical Result Receipt and Processing for Sample, Analysis and QC Data—Revision: 3

AUTHOR(S):
L. Graves* and S. Chamberlain

ENVIRONMENTAL RESTORATION DEPARTMENT
CONTROLLED COPY
_____
THIS IS A RED STAMP
ERD

APPROVALS:	Date
Department Manager	3/9/09
Hydrogeology & Decision Support Division Leader	1/26/09

CONCURRENCE:	Date
QA Implementation Coordinator	3/9/09

Type of Procedure (per ES&H Manual, Document 3.4)

☒ Informational Use ☐ General Use ☐ Continuous Use

*Remtech Service, Inc.

1.0 PURPOSE

The purpose of this procedure is to establish the means for receiving and storing electronic analytical results as received from Contract Analytical Laboratories (CALs). This procedure is to ensure complete and consistent handling of all electronic analytical records within the Environmental Restoration Department (ERD).

2.0 APPLICABILITY

This procedure applies to Data Management Team (DMT) personnel performing quality-affecting activities in the receipt and storage of electronic analytical results. ERD work activities

are conducted within the framework of the institutional Integrated Safety Management System (ISMS). The Environmental Management System (EMS) is a component of the ISMS, which is also supported during the planning, performing, and evaluation of the work processes.

3.0 REFERENCES

Not applicable.

4.0 DEFINITIONS

See SOP Glossary.

5.0 RESPONSIBILITIES

5.1 Department Manager (DM)

The DM's responsibility is to ensure that all activities performed by ERD at the Livermore Site and Site 300 are performed safely and comply with all pertinent regulations and procedures and provide the necessary equipment and resources to accomplish the tasks described in this procedure.

5.2 Project Leader (PL)

The PL's responsibility is to ensure that all activities are performed safely and comply with all pertinent regulations and procedures, work is authorized through an Integration Work Sheet (IWS), and there is sufficient funding to initiate the work.

5.3 Hydrogeology & Decision Support Division Leader (HDSDL)

The HDSDL's responsibility is to ensure that proper procedures are followed and activities are conducted safely, consistently, and adequately.

5.4 Quality Control (QC) Chemists

The ERD QC Chemists are responsible for reviewing 100% of the analytical data for technical adequacy, internal consistency and quality, determining and flagging data quality and requesting additional information from the analytical laboratories if there are suspect data points or problematic QC results.

5.5 Activity Leader (AL)

Personnel who are responsible for specific tasks, e.g., writing assigned sections of compliance monitoring reports and reviewing the analytical data for internal consistency prior to inclusion of data in reports.

5.6 Environmental Protection Department (EPD) Analyst

The analysts are responsible for reviewing data for internal consistency within their sampling networks.

5.7 Data Management Team (DMT)

The DMT is responsible for the disposition of the original documents received as a result of performing work activities described by this SOP.

6.0 PROCEDURES

6.1. Log-in to web application

Open a web browser

Select URL https:www-taurus.llnl.gov

Select data team

6.2 Import Holding Tables to Work Tables

From data team home page, select monitor. Select import holding tables to work tables.

6.2.1 The electronic files from CALs are transmitted to the ERD LLNL. Each laboratory has its own directory. In each transmittal there are up to 5 files; Sample, analysis, qckey, qcanal, and text (optional). The files are in the analytical laboratory's directory, and are named as follows:

zzxerdyymmdd_hhmisample.xfer

zzxerdyymmdd_hhmianalysis.xfer

zzxerdyymmdd_hhmiqcanal.xfer

zzxerdyymmdd_hhmiqckey.xfer

zzxerdyymmdd_hhmitext.xfer

Where: zz = two letter code for the laboratory

x = project to which the data belongs, l for Livermore Site, 3 for Site 300, or w for EPD (formerly WGMG)

yy = year

mm = month

dd = day

hh = hours

mi = minutes

Programming automatically moves data in these files to the holding tables in Taurus Environmental Information Management System (TEIMS).

6.2.2 In TEIMS, Data Team, Import Data from Holding Tables, select Lab Code

Select desired files to upload
Click on Move to Worktables button
Confirm that import is successful by viewing bottom of page

6.2.3 Run Standard Report

Select SQL under Templates link
Choose SQL file stdrpt.sql
Submit query
Go to bottom of screen – select Download as tsv file
Print directly or as Excel spreadsheet

6.3 Groom the Data

6.3.1 Click on Monitor Link

Select Verify Sample (run all)
Make corrections as needed
Re-run verification until you see No Errors message
Repeat for: qc_analysis, sur_analysis, tic_analysis, analysis

6.3.2 Click on Scan Queries

Make corrections as needed
Re-run until you get No Errors message
Print when issues resolved

6.3.3 Inform the appropriate Activity Leader(s), EPD Analyst, or their designee(s) if there are hits in the cleanwell program or statlimitchk.

6.3.4 For every treatment facility influent name that is labeled as a well name and the influent name, store in sample table by the well name. Add a record to extract1well table with the same log_no, the influent name, and sampled date. There is no need to enter multiple wells going to one influent.

6.4 Account for Hard Copies

6.4.1 Sort laboratory hard copies by log number.

Collect and compare hard copies that are part of the current electronic shipment with standard report.

Compare by each log number and requested analysis, if available, doing a visual scan of every page checking for unusual inclusions and exclusions.

6.5 Record Data Qualifier Flags

6.5.1 Review validated data returned from the QC chemists to determine whether qualifier flags have been assigned.

6.5.2 Add electronic flags using the SQL templates select:

Assign_flag_ora.sql

Assign_flagrpt_ora.sql

Confirm flags added are the same flags assigned by QC Chemist and resolve any differences with the QC Chemist.

6.5.3 Add all other assigned data qualifier flags to the appropriate analysis record in the analysis table, clp_qa_flag field.

6.5.4 Initial and date data qualifier flag form when done.

6.6 Generate Edit Reports and Check Data

6.6.1 Generate edit reports and proof electronic data.

6.6.2 Select 10% or 100% of the samples for detailed data review and comparison to laboratory reports. At least one of each requested analysis type in the electronic shipment should be represented in the 10%. For new laboratories, use 100% until 3 consecutive sends have passed completely.

6.6.3 Compare every field with the printed analytical results and verify identical content. If discrepancies between electronic and hard copy data are discovered, particularly with result and los_value, contact the analytical laboratory to confirm data.

Request revisions with any necessary changes.

Note requested revision in the receive data application.

Make applicable changes in the work tables including a remark in the sample table note field that the revision was made on a certain date, and include your initials.

6.7 Peer Review

6.7.1 Assemble a packet of:

Standard printout

Edit report

Scan log

Verifications for all tables

Other printouts produced by the scan (if applicable)

6.7.2 Provide packet to another DMT member for peer review for 100% proof of assembled package.

6.7.3 Make necessary changes based on the reviewer's recommendations.

6.7.4 Have the reviewer make a final recheck and place his/her initials on data packet.

6.7.5 Initial and date packet.

6.8 Append Data to Global Tables

6.8.1 In TEIMS, Monitor use "Upload data from work tables to global tables" to append wsample, wanalysis, wtic_analysis, wsur_analysis, and wanal_comments tables, from work tables to global tables.

6.8.2 In the global tables, perform random retrievals to verify the records just appended are accessible. Check that the number of rows appended from the work tables matches the number of rows added to the global tables.

6.8.3 Repeat Steps Sections 6.8.1 and 6.8.2 to append wqckey and wqcanal.

7.0 QA RECORDS

7.1 All original analytical results, reports, and copies

7.1.1 Short Term Storage of Original Analytical Results paper (3 years); stored in the same building where the DMT resides.

7.1.2 Long Term Storage of Original Analytical Results paper in Records Archives and Management Group in the Records Management Building 411.

7.2 Electronically stored records

8.0 ATTACHMENTS

Not applicable.

LLNL Environmental Restoration Department (ERD)
Standard Operating Procedure (SOP)

ERD SOP 5.4: Data Management Hand Entry of Analytical Results—Revision: 2

AUTHOR:
L. Graves* and S. Chamberlain

APPROVALS:	Date
Jesse Yow Department Manager	3/9/09
Hydrogeology & Decision Support Division Leader	1/26/09

CONCURRENCE:	Date
Rebecca Goodrich QA Implementation Coordinator	3/9/09

Type of Procedure (per ES&H Manual, Document 3.4)

☒ Informational Use ☐ General Use ☐ Continuous Use

*Remtech Services Inc.

1.0 PURPOSE

The purpose of this procedure is to establish the means for storing electronically hand-entered hard copy analytical results received from analytical laboratories and to ensure complete and consistent hand entry of all hard copy analytical records [not received electronically in the standard Electronic Data Deliverable (EDD) format] within the Environmental Restoration Department (ERD) Data Management Team (DMT).

2.0 APPLICABILITY

This procedure applies to DMT hand entry of analytical results not received electronically in standard EDD format. ERD work activities are conducted within the framework of the institutional Integrated Safety Management System (ISMS). The Environmental Management System (EMS) is a component of the ISMS, which is also supported during the planning, performing, and evaluation of the work processes.

3.0 REFERENCES

Not applicable.

4.0 DEFINITIONS

See SOP Glossary.

5.0 RESPONSIBILITIES

5.1 Department Manager (DM)

The DM's responsibility is to ensure that all activities performed by ERD at the Livermore Site and Site 300 are performed safely and comply with all pertinent regulations and procedures and provide the necessary equipment and resources to accomplish the tasks described in this procedure.

5.2 Project Leader (PL)

The PL's responsibility is to ensure that all activities are performed safely and comply with all pertinent regulations and procedures, work is authorized through an Integration Work Sheet (IWS), and there is sufficient funding to initiate the work.

5.3 Hydrogeology & Decision Support Division Leader (HDSDL)

The HDSDL's responsibility is to ensure that proper procedures are followed and activities are conducted safely, consistently, and adequately.

5.4 ERD Data Management Team (DMT)

The DMT's responsibilities are to receive analytical reports and process them as outlined in this procedure. Furthermore, the DMT's responsibility is to communicate with the QC Chemist and Contract Analytical Laboratories (CALs) regarding necessary corrections or clarifications of reported analytical results.

6.0 PROCEDURES

6.1 Preparation

Use the hand entry copy of the original analytical data located in the corresponding laboratory's data box. Obtain the information needed to fill in sample and analysis spreadsheets.

6.2 Entry via Spreadsheets

6.2.1 Download the Microsoft Excel templates for the hand entry spreadsheets, by logging onto the Taurus Environmental Information Management System (TEIMS). Under Templates; click on HE. There are two templates necessary, he_analysis.xls and he_sample.xls. Download both files and begin to fill in the appropriate information.

Note: Data columns must conform to the template stated order.

6.2.2 Populate spreadsheets.

- Enter data that corresponds to the appropriate columns.
- Print and proofread the spreadsheets.

Note: There must be NO commas in the spreadsheet file.

- Do not remove the header row from the file.
- Save the files as text (tab delimited).

6.2.3 Move the files to Oracle holding tables

- From TEIMS, select File Upload.
- Step 1: Select appropriate organization, Lab/Task=hand entry, file type.
- Step 2: Browse for desired file and press button for upload.
- Repeat for remaining file.

6.3 Continue process using ERD SOP 5.3 Data Management Electronic Analytical Result Receipt and Processing for Sample, Analysis, and QC Data

7.0 QA RECORDS

Not applicable.

8.0 ATTACHMENTS

Not applicable.

LLNL Environmental Restoration Division (ERD)
Standard Operating Procedure (SOP)

ERD SOP 5.5: Data Management Revision Receipt and Processing —Revision: 1

AUTHOR(S):
L. Graves*

ENVIRONMENTAL RESTORATION DIVISION
CONTROLLED COPY
_____
THIS IS A RED STAMP
ERD

APPROVALS:	Date
Albert I Lamarre **Division Leader**	9/8/00
Carol Stoker **Information Systems Management Group Leader**	9/8/00

CONCURRENCE:	Date
Valerie Dibley **QA Implementation Coordinator**	9/7/00

*CMG Contract Services

1.0 PURPOSE

The purpose of this procedure is to establish the means for receiving and processing revisions of hard copy analytical result records received from the analytical laboratories. This procedure is to ensure complete and consistent handling of revision records within the Environmental Restoration Division (ERD) Data Management Team (DMT).

2.0 APPLICABILITY

This procedure applies to personnel performing quality affecting activities in the receipt and processing of revisions of hard copy analytical results, which constitute QA records, under the scope of the Environmental Protection Department (EPD) Quality Assurance Management Plan (QAMP).

3.0 REFERENCES

3.1 Not applicable.

4.0 DEFINITIONS

See SOP Glossary.

5.0 RESPONSIBILITIES

5.1 Analytical Laboratories

Analytical laboratories are responsible for submitting revised analytical results to ERD's DMT. Revised reports must be clearly identified as revisions.

5.2 Data Management Team (DMT)

The DMT is responsible for receiving and processing revised analytical results in this procedure. The DMT is also responsible for communicating with the analytical laboratories regarding corrections or adjustments to CoC requests.

6.0 PROCEDURE

6.1 Revision

6.1.1 Date stamp the revised original and stamp "Revision" with a red revision stamp.

6.1.2 Enter into new data log table and put message in the note field.

6.1.3 Make requested copies, if necessary.

6.1.4 File copy in analytical laboratory data box.

6.1.5 Update the Monitor tables in EPDData database.

6.1.5.1 Analysis Table, qc_key and qc_anal tables.

- Enter the revised information per the revision cover sheet.

6.1.5.2 Sample Table

- Enter the revised information per the revision cover sheet. In the Note Field, enter "Revision <date><your initials>." Revision date is the date stamped on the document upon receipt.

6.1.5.3 Perform a screen print of updates and place in the "Global Update" file.

6.1.6 Date and sign the original to verify that the electronic revision was performed.

6.1.7 Record and date the updated information in the "Global Update Logbook".

6.1.8 Find original data and stamp "Superseded by Revision" and write revision receipt date (date revision received by ERD DMT). Attach revision to original data.

7.0 QA RECORDS

The following documents shall be maintained as ERD Quality Assurance Records (REFERENCE 3.4):

7.1 Electronically stored hard copy analytical records.

8.0 ATTACHMENTS

Not applicable.

LLNL Environmental Restoration Department (ERD)
Standard Operating Procedure (SOP)

ERD SOP 5.6: Ground Water Elevation Reports—Revision: 1

AUTHOR(S):
S. Chamberlain and N. Blankenship*

ENVIRONMENTAL RESTORATION DEPARTMENT
CONTROLLED COPY
_____
THIS IS A RED STAMP
ERD

APPROVALS:	Date
Department Manager	3/9/09
Hydrogeology & Decision Support Division Leader	1/26/09

CONCURRENCE:	Date
QA Implementation Coordinator	3/9/09

Type of Procedure (per ES&H Manual, Document 3.4)

☒ Informational Use ☐ General Use ☐ Continuous Use

*IAP World Services

1.0 PURPOSE

The purpose of this procedure is to establish the means for receiving, entering, and distributing ground water elevation measurements received each month for Livermore Site and Site 300.

2.0 APPLICABILITY

This procedure is to ensure complete and consistent handling of all ground water elevation measurements for both Livermore Site and Site 300 within the Environmental Restoration Department (ERD) Data Management Team (DMT). ERD work activities are conducted within the framework of the institutional Integrated Safety Management System (ISMS). The Environmental Management System (EMS) is a component of the ISMS, which is also supported during the planning, performing, and evaluation of the work processes.

3.0 REFERENCES

Not applicable.

4.0 DEFINITIONS

Not applicable.

5.0 RESPONSIBILITIES

5.1 Department Manager (DM)

The DM's responsibility is to ensure that all activities performed by ERD at the Livermore Site and Site 300 are performed safely and comply with all pertinent regulations and procedures, and provide the necessary equipment and resources to accomplish the tasks described in this procedure.

5.2 Project Leader (PL)

The PL's responsibility is to ensure that all activities are performed safely and comply with all pertinent regulations and procedures, work is authorized through an Integration Work Sheet (IWS), and there is sufficient funding to initiate the work.

5.3 Hydrogeology & Decision Support Division Leader (HDSDL)

The HDSDL's responsibility is to ensure that proper procedures are followed and activities are conducted safely, consistently, and adequately.

5.4 ERD Data Management Team (DMT)

The DMT's responsibilities are to receive and process ground water measurements as outlined in this procedure.

5.5 Field Personnel (FP)

The FP are responsible for taking ground water elevation measurements by following applicable procedures, including logging measurements onto the current ground water elevation field sheet. As time permits, FP enters the elevations onto an MS Excel spreadsheet. The spreadsheet is emailed to DMT by the FP. If there isn't sufficient time for the FP to finish the data entry to the spreadsheet then it is completed by DMT. The original ground water elevation field sheet with handwritten depths-to-water is to be delivered to the DMT as soon as possible.

6.0 PROCEDURES

6.1 Ground Water Elevation Spreadsheets

Ground water elevation spreadsheets are received by email from Field Personnel.

6.2 Grooming Spreadsheet

Open the previous monthly or quarterly file and save the file using the current month in the filename. Hand enter the new depth to water measurements and dates onto the spreadsheet. Enter note codes into the report_note field (i.e., 'pump off' is in the report_note field as 'PF'). Longer notes (i.e., reasons for no measurements) should be entered in the note field. If POMs (point of measurements) are noted on the fieldsheet, enter these changes in the tcasing_ht field of the well table and recalculate the new well_msrg_pt before moving them into the database. Save the file as an Excel file and save again as a txt format file. The txt file will have an extension, 'xxxxx.txt'.

6.3 Move the files to Oracle holding tables

- From Taurus Environmental Information Management System (TEIMS), select File Upload.
- Step 1: Select appropriate organization, Lab/Task=hand entry, file type.
- Step 2: Browse for desired file and press button for upload.

6.4 Move file to work tables

From Taurus Environmental Management System (TEIMS), select Monitor.

From DMT Tools for Monitor, select Import Holding Tables to Work Tables

Select the Labcode HE (for hand entry) and then select appropriate table (i.e., heerd080924_1620gwelevation.xfer). Press the "Move to Work Tables" button to move the file.

6.5 Calculation and Update

Run gwelevupd_ora.sql from sql templates in TEIMS. This file retrieves well_msrg_pt from the well table and subtracts the depth_water measurement to calculate the elevation. Location identifier (field_loc_id), sampled date (sampled), depth-to-water (depth_water), calculated ground water elevation (elevation), sampling organization (sampling_org), note, retrieved well measuring point (well_msrg_pt), entered date (entered), and project name (project) are stored in the wgwelevation table fields. Set project to either 3GIV or LGIV.

Note: Any change to depth-to-water or POM fields will require a manual recalculation of the ground water elevation in the global table and approval by a Hydrogeologist.

6.6 Verifications

Run gwelevdeldup_ora.sql. Print hard copies.

6.7 Append to Global Ground Water Elevation Table

Append ground water data using the file gwelappend_ora.upd.

6.8 Generate Ground Water Report: Appendix C

Select report gwreport_ora.sql in TEIMS.

Enter the correct area1 (LLNL or S300)

Enter the correct project (LGIV or 3GIV)

Enter the correct date range.

Click the submit button. Download results to a tsv file and open with Excel.

Print report using font size 8, portrait orientation. Distribute report as appropriate.

6.9 Generate Ground Water Difference Report

Select gwelevdif_ora.sql report to calculate the relative difference between the present month and previous month's depths. Adjust the sql.

Put in the previous month and year on the first line. Put in the current month and year on the second line. Modify the date ranges using the current or recent dates from the work gwelevation table and the previous data range from the global gwelevation table. Put in the correct project. Click the submit button and download the results to a tsv files and open with Excel Print report using font size 8, portrait orientation. Check any measurements with a difference of 1 foot or more. Make corrections and re-run as necessary. Distribute final report as appropriate.

6.10 Generate Fieldsheets

6.10.1 Livermore Site

Run sql template LLNL_gwe_field_sheet.sql.

Save as MS Excel spreadsheet.

Email new spreadsheet to Field Personnel to use as the next fieldsheet.

6.10.2 Site 300

Run sql template either s300ewfa_ora.sql or s300 southern_ora.sql.

Save as MS Excel spreadsheet.

Email new spreadsheet to Field Personnel to use as the next fieldsheet.

7.0 QUALITY ASSURANCE RECORDS

7.1 Fieldsheets

8.0 ATTACHMENTS

Not applicable.

LLNL Environmental Restoration Department (ERD)
Standard Operating Procedure (SOP)

ERD SOP 5.8: Field Logbook Control—Revision: 3

AUTHOR(S):
C. Cook* and S. Chamberlain

ENVIRONMENTAL RESTORATION DEPARTMENT
CONTROLLED COPY
_____
THIS IS A RED STAMP
ERD

APPROVALS: **Date**

Jesse Yow 3/9/09
Department Manager

1/26/09
Hydrogeology & Decision Support Division Leader

CONCURRENCE: **Date**

Rebecca Goodrich 3/9/09
QA Implementation Coordinator

Type of Procedure (per ES&H Manual, Document 3.4)

☒ **Informational Use** ☐ **General Use** ☐ **Continuous Use**

*IAP

1.0 PURPOSE

The purpose of this procedure is to establish the means for issuing and using field logbooks. This procedure is to ensure complete and consistent handling of all field logbooks within the Environmental Restoration Department (ERD) Data Management Team (DMT).

2.0 APPLICABILITY

This procedure applies to personnel performing quality-affecting activities in the issue and use of field logbooks. ERD work activities are conducted within the framework of the institutional Integrated Safety Management System (ISMS). The Environmental Management System (EMS) is a component of the ISMS, which is also supported during the planning, performing, and evaluation of the work processes.

3.0 REFERENCES

3.1 Not applicable.

4.0 DEFINITIONS

See SOP Glossary.

5.0 RESPONSIBILITIES

5.1 Department Manager (DM)

The DM's responsibility is to ensure that all activities performed by ERD at the Livermore Site and Site 300 are performed safely and comply with all pertinent regulations and procedures, and provide the necessary equipment and resources to accomplish the tasks described in this procedure.

5.2 Project Leader (PL)

The PL's responsibility is to ensure that all activities are performed safely and comply with all pertinent regulations and procedures, work is authorized through an Integration Work Sheet (IWS), and there is sufficient funding to initiate the work.

5.3 Hydrogeology & Decision Support Division Leader (HDSDL)

The HDSDL's responsibility is to ensure that proper procedures are followed and activities are conducted safely, consistently, and adequately.

5.4 ERD Data Management Team (DMT)

The DMT's responsibilities are to create, issue, assign, maintain, and track custody and status of the field logbooks.

6.0 PROCEDURES

6.1 Issuing the ERD Field Logbook

All controlled logbooks are issued by DMT.

6.1.1 Assign a document control number to the new logbook. ERD field logbooks are controlled documents and must be assigned a **unique** character code by the DMT. Check the logbook file in the appropriate server.

6.1.2 Use only a new bound logbook as kept in supply for controlled field logbooks with consecutively numbered pages, beginning with 1 (one). Place tape (blue for Livermore Site and green for Site 300) approximately one third from the top and all the way around the outside of the book.

6.1.3 Put the code on the front and spine of the book.

6.1.4 Write the following information inside the front cover:

- Book code.
- Technician and project name.
- Date.
- Page number for information and signature of recipient in the master logbook.

6.1.5 Apply the stamps that read:

- "If found send to: LLNL L-542, P.O. Box 808, Livermore, CA 94551"
- "OFFICIAL LAB DOCUMENT, DO NOT DEFACE!"

6.1.6 Write the following in the document control master logbook:

{**unique code**} logbook assigned to {**person's name**} for {**project**} {**date**}
Signed:_____ Completed: {**date**}

6.1.7 Have the recipient sign the master logbook upon receipt.

6.1.8 For new facilities, when the first logbook is requested, notify data manager doing treatment facility naming. That person will provide a copy of the naming convention memo to paste in the back of the new logbook. Also, that person will be responsible for entering the sampling port names in the location table.

6.2 Completed Field Logbooks

6.2.1 Write the date of completion in the master logbook.

6.2.2 Archive returned logbook (see Section 6.3).

6.2.3 Issue a new logbook if work is continuing.

6.2.4 Update logbook spreadsheet on appropriate server.

6.3 Storage of Field Logbooks

6.3.1 The signed out field logbook must remain with the recipient or at a central location during a project.

6.3.2 After a project is complete, the field logbook must be returned to the DMT where it is archived. Completed logbooks may be retained in an established location when approved by DMT and a custodian (i.e., a sample coordinator, drilling coordinator, treatment facility operator or their designees).

6.3.4 Those needing a completed field logbook must sign it out from DMT or the custodian.

7.0 QA RECORDS

The following documents shall be maintained as ERD Quality Assurance Records:

7.1 Controlled Field Logbooks

7.2 Master Logbook

8.0 ATTACHMENTS

Not applicable.

LLNL Environmental Restoration Department (ERD)
Standard Operating Procedure (SOP)

ERD SOP 5.10: Data Management Receipt and Processing Lithology by Electronic Transfer—Revision: 3

AUTHOR(S):
S. Chamberlain and N. Blankenship*

ENVIRONMENTAL RESTORATION DEPARTMENT
CONTROLLED COPY
THIS IS A RED STAMP
ERD

APPROVALS: **Date**

Jesse Yow — 3/9/09
Department Manager

[signature] — 1/26/09
Hydrogeology & Decision Support Division Leader

CONCURRENCE: **Date**

Rebecca Goodrich — 3/9/09
QA Implementation Coordinator

Type of Procedure (per ES&H Manual, Document 3.4)

☒ **Informational Use** ☐ **General Use** ☐ **Continuous Use**

*CMG Contract Services

1.0 PURPOSE

The purpose of this procedure is to establish the means for receiving and processing lithology data received by electronic transfer from the Hydrogeologists (HG) of the Environmental Restoration Department (ERD). This procedure is to ensure complete and consistent handling of electronically transferred lithology data within the Data Management Team (DMT) of the Hydrogeology & Decision Support Division (HDSD).

2.0 APPLICABILITY

This procedure applies to personnel receiving and processing electronically transferred lithology data using the Taurus Environmental Information Management System (TEIMS) database. ERD work activities are conducted within the framework of the institutional Integrated Safety

Management System (ISMS). The Environmental Management System (EMS) is a component of the ISMS, which is also supported during the planning, performing, and evaluation of the work processes.

3.0 REFERENCES

Not applicable.

4.0 DEFINITIONS

See SOP Glossary.

5.0 RESPONSIBILITIES

5.1 Department Manager (DM)

The DM's responsibility is to ensure that all activities performed by ERD at the Livermore Site and Site 300 are performed safely and comply with all pertinent regulations and procedures and provide the necessary equipment and resources to accomplish the tasks described in this procedure.

5.2 Project Leader (PL)

The PL's responsibility is to ensure that all activities are performed safely and comply with all pertinent regulations and procedures, work is authorized through an Integration Work Sheet (IWS), and there is sufficient funding to initiate the work.

5.3 Hydrogeology & Decision Support Division Leader (HDSDL)

The HDSDL's responsibility is to ensure that proper procedures are followed and activities are conducted safely, consistently, and adequately.

5.4 ERD Data Management Team (DMT)

The DMT's responsibilities are to receive lithologic data and process them as outlined in this procedure and communicate with the ERD Hydrogeologists (HG) regarding necessary corrections or clarifications of reported lithologic data.

5.5 ERD Hydrogeologists (HG)

The ERD HG is responsible for reviewing lithologic data entered into the TEIMS Data Mining Tool, Borehole Logging Lithology. Once the lithologic data is in the database, the HG will proof it to confirm accuracy.

5.6 ERD Drilling Geologist (DG)

The ERD DG is responsible for entering relevant lithologic data into the TEIMS Data Mining Tool, Borehole Logging Lithology.

6.0 PROCEDURES

6.1 Transfer of data

6.1.1 The DG logs onto TEIMS Data Mining.

6.1.2 Select Borehole Logging Lithology for the appropriate number of lines to be entered, less than 50 or up to 250 lines.

6.1.3 Enter the boring name. For each strata, enter depth of lower contact. Select minor constituent and major constituent from the pick lists.

6.1.4 Once all the lithologic data has been entered, click the 'Do It' button.

6.2 Upload lithologic data to work tables and process data

6.2.1 Log onto TEIMS Data Team.

6.2.2 Select File Upload.

6.2.3 Set Organization=ERD, Lab/Task=hand_entry, and File Type=LITHOLOGIC.

6.2.4 Browse to designated directory and click on file desired. Click the 'Press' button.

6.2.5 Go to Monitor application, Import Holding Tables to Work Tables, select HEERD*LITHOLOGIC file desired. Click 'Move to work tables'.

6.2.6 Go to SQL Templates and click on wlith.sql. Click submit to run.

6.2.7 Review the output and if any errors are found resolve them. Rerun wlith.sql to confirm all errors have been corrected.

6.3 Append to Global Table

6.3.1 Go to Monitor application, Append Any Table To Corresponding Global Table.

6.3.2 Select WLITHOLOGIC and click submit.

6.4 Verify Lithologic Data

6.4.1 Now that the data is in the global table, the HG can do a query on the desired boring and confirm that the data is correct.

7.0 QA RECORDS

Not applicable.

8.0 ATTACHMENTS

Not applicable.

LLNL Environmental Restoration Department (ERD)
Standard Operating Procedure (SOP)

ERD SOP 5.14: Issuing New Parameter Codes
Revision: 1

AUTHOR(S):
S. Chamberlain and S. Lambaren

APPROVALS:	Date
Department Manager	3/9/09
Hydrogeology & Decision Support Division Leader	1/26/09

CONCURRENCE:	Date
QA Implementation Coordinator	3/9/09

Type of Procedure (per ES&H Manual, Document 3.4)

☒ Informational Use ☐ General Use ☐ Continuous Use

1.0 PURPOSE

The purpose of this procedure is to set forth steps by which parameter codes are chosen and assigned for new compounds or properties that need to be stored in the database.

2.0 APPLICABILITY

This procedure applies to personnel performing quality-affecting activities in the creation of parameter codes and parameter aliases for use in the Taurus Environmental Information Management System (TEIMS).

3.0 REFERENCES

3.1 Not applicable.

4.0 DEFINITIONS

See SOP Glossary.

5.0 RESPONSIBILITIES

5.1 Department Manager (DM)

The DM's responsibility is to ensure that all activities performed by ERD at the Livermore Site and Site 300 are performed safely and comply with all pertinent regulations and procedures and provide the necessary equipment and resources to accomplish the tasks described in this procedure.

5.2 Project Leader (PL)

The PL's responsibility is to ensure that all activities are performed safely and comply with all pertinent regulations and procedures, work is authorized through an Integration Work Sheet (IWS), and there is sufficient funding to initiate the work.

5.3 Hydrogeology & Decision Support Division Leader (HDSDL)

The HDSDL's responsibility is to ensure that proper procedures are followed and activities are conducted safely, consistently, and adequately.

5.4 Contract Analytical Laboratories (CALs)

Analytical laboratories are responsible for submitting requests to ERD's Data Management Team for new parameter codes.

5.5 Parameter Code Designator (PCD)

The Parameter Code Designator (a member of the Data Management Team) is responsible for creating the needed codes for this procedure. The Parameter Code Designator also communicates the new code(s) to the analytical laboratories.

6.0 PROCEDURES

6.1 When one or more parameter codes are requested, the PCD will request or determine from the requester the name and CAS (Chemical American Society) number, if any, of the constituent(s) requiring codes. Often an analytical laboratory will need a new code in order to complete an electronic data deliverable (EDD). In such cases, the Parameter Code Designator will do the following steps as quickly as possible, hopefully within 5 to 10 minutes, while still doing a thorough job.

Note: The following steps are performed by the PCD:

6.1.1 Check the database, both parameter table and parmalias table, for the CAS number and constituent name. Note that not all constituents have a CAS number. If a matching CAS number or constituent name is found, a parameter code already exists and the following steps are not necessary. Call the requester with the existing code(s).

6.1.2 If a parameter code exists for the CAS number, but the requested name is not listed, then the requested constituent name may be a synonym. Check with a chemist, reference books, or the internet to determine if the synonym is correct. If it is a synonym, enter the name into the parmalias table. Use the same parameter code as the existing constituent which already has that CAS number and assign a sequence number appropriate for the alphabetical position in the listing. Call the requester with the existing code(s).

6.1.3 If no matching parameter code(s) are found to match the CAS given by the requester, determine whether the constituent name has a synonym by reviewing reference books, internet, and/or by consulting a chemist. If the constituent does not exist in the database under a different name, assign it a parameter code as described below.

6.1.4 Locate an unused code number from the parameter list. If possible in a timely manner, choose a number that is near where the constituent would be alphabetically. Such a selection is not always possible.

6.1.5 Select a sequence number that will place the parameter in the correct alphabetical order. If necessary, adjust nearby sequence numbers to maintain alphabetical order.

6.1.6 Enter the new information in the database.

6.1.7 Call the requester and give them the new parameter code(s) and sequence number(s), if requested.

6.2 Tentatively Identified Compounds

6.2.1 If the constituent requested is a tentatively identified compound (TIC), no new parameter code is issued, unless:

1. The TIC has been reported previously more than 10 times. Do a query on the tic analysis table to locate any records for that specific constituent. If a new code is issued, tic analyses records must be updated with the new code.

2. A scientist requests a code based on his understanding that it is a constituent of interest.

6.2.2 If a code is requested for a TIC and it has been determined that no new parameter code will be issued, explain to the requester how to use parameter codes 9800 through 9809. These codes are used for TICS and the lab_analyte and comment

fields in the EDD analysis file are to contain the TIC name and retention time and CAS number, if known. Each log number can have a maximum of 10 TICS. If there are more than ten TICS per log number for which there are no existing parameter codes, consult the PCD.

7.0 QUALITY ASSURANCE RECORDS

Not applicable.

8.0 ATTACHMENTS

Not applicable.

LLNL Environmental Restoration Department (ERD)
Standard Operating Procedure (SOP)

ERD SOP 5.15 Preparation of Required Routine Groundwater and Treatment Facilities Sampling Plans—Revision: 1

AUTHOR(S):
S. Lambaren and D. Burruss

APPROVALS: **Date**

Jesse Yow — 3/9/09
Department Manager

[signature] — 1/26/09
Hydrogeology & Decision Support Division Leader

CONCURRENCE: **Date**

Rebecca Goodrich — 3/9/09
QA Implementation Coordinator

Type of Procedure (per ES&H Manual, Document 3.4)

☒ **Informational Use** ☐ **General Use** ☐ **Continuous Use**

1.0 PURPOSE

The purpose of this SOP is to set forth steps by which the Required Routine Groundwater and Treatment Facilities Sampling Plan is prepared.

2.0 APPLICABILITY

This procedure applies to the development of the Livermore Site 200 and Site 300 Required Routine Groundwater and Treatment Facility Sampling Plan for the Environmental Restoration Department (ERD) and the Environmental Protection Department (EPD). ERD work activities are conducted within the framework of the institutional Integrated Safety Management System (ISMS). The Environmental Management System (EMS) is a component of the ISMS, which is also supported during the planning, performing, and evaluation of the work processes.

3.0 REFERENCES

Not applicable.

4.0 DEFINITIONS

Not applicable.

5.0 RESPONSIBILITIES

5.1 Department Manager (DM)

The DM's responsibility is to ensure that all activities performed by ERD at the Livermore Site 200 and Site 300 are performed safely and comply with all pertinent regulations and procedures, and provide the necessary equipment and resources to accomplish the tasks described in this procedure.

5.2 Project Leader (PL)

The PL's responsibility is to ensure that all activities are performed safely and comply with all pertinent regulations and procedures, work is authorized through an Integration Work Sheet (IWS), and there is sufficient funding to initiate the work.

5.3 Hydrogeology & Decision Support Division Leader (HDSDL)

The HDSDL's responsibility is to ensure that proper procedures are followed and activities are conducted safely, consistently, and adequately.

5.4 Hydrogeologist (HG)

The HG is responsible for helping determine borehole/well locations and design, hydrostratigraphic analysis, and planning/evaluation of hydraulic tests.

5.5 Statistician (ST)

The ST works with the algorithm expert developing the algorithm.

5.6 Activity Leader (AL)

Personnel who are responsible for specific tasks, e.g., writing assigned sections of compliance monitoring reports and reviewing analytical data for internal consistency prior to inclusion of data in reports.

5.7 Sampling Coordinator (SC)

Once well development is complete and the SC is notified, the SC will add the well to the Routine Ground Water Sampling Schedule. The SC also provides a quarterly list of

locations designated to collect collocated samples and field blank samples for Quality Control (QC).

5.8 Field Personnel (FP)

The FP are responsible for the safe completion of evacuating and sampling ground water monitor wells per the quarterly sampling plans.

5.9 Data Management Team (DMT)

The DMT, in affiliation with the SC, maintains an electronic record of the sampling plan, its implementation, and the receipt of resulting analytical data. The DMT runs the Cost-Effective Sampling (CES) Algorithm for VOCs (see SOP 5.20, "Cost-Effective Sampling (CES) Algorithm Preparation") at the request of the SC. The DMT provides, upon request, reports of the sampling plan, the status of particular planned or collected samples, and the status and/or content of resulting analytical data. Furthermore, the DMT supports the AL, SC, and FP by supplying clarification of sample identification and requested analysis codes used on CoC forms.

6.0 PROCEDURES

6.1 Sampling Plan Development.

Site 300

Routine Groundwater Investigation sampling required by regulators. Sample driver paying account owner 3GIV (Includes Driver Codes 3GIV, 3CMP, 3CMPGTR, 3GIVGTR).

Treatment Facility sampling required by regulators. Sample driver paying account owner 3GTR (Includes Driver Codes 3GTR).

EPD sampling. Sample driver paying account owner 3EMG (Includes Driver Codes 3EMG).

Livermore Site 200

Routine Groundwater Investigation sampling required by regulators. Sample driver paying account owner LGIV (Includes Driver Codes LGIV).

Treatment Facility sampling required by regulators. Sample driver paying account owner LGTR (Includes Driver Codes LGTR).

EPD sampling. Sample driver paying account owner 2EMG (Includes Driver Codes 2EMG).

6.1.1 This Section 6.1.1 is for LGIV Driver paying account owners only:

Six weeks prior to the new quarter DMT provides the previous quarter location list to the HG or their designee. The HG reviews and updates the location list and returns it to the DMT.

The DMT updates the locgroups table to reflect changes to the location list and notifies all concerned when it is completed.

The Cost Effective Sampling Algorithm (CES) is run using the updated location list. See SOP 5.20, "Cost-Effective Sampling Algorithm Preparation."

The HG reviews the CES Algorithm recommendations. The HG overrides algorithm recommendations as necessary and sends the updated CES Algorithm recommendations to the SC.

The SC reviews the results of the adjusted CES algorithm recommendations for each monitor well and piezometer with the HG.

The HG sends final recommendations to SC and DMT.

The SC develops the routine quarterly sampling plan Excel spreadsheet. The SC constructs the draft quarterly sampling plan using input from the HG, the recommendations from the CES output, and those exceptions described in Section 6.5.

6.1.2 Create a Draft sampling plan (DMT): Login to TAURUS.

Login to SPACT, Sample Planning: Enter driver_code, year, quarter.

Choose "Create Plan": a Plan Code file will be generated.

Login to TAURUS, SQL/Templates: update query (LLNLSamplingPlan.sql for Livermore Site 200, S300SamplingPlan.sql for S300). Choose: driver_code, year, quarter, op_unit_set_name. Run query. Download query output as tsv file, and save as an Excel spreadsheet. The spreadsheet is the DRAFT Sampling Plan.

6.2 Distribute Draft Sampling Plan. For Site 300 and treatment facility sampling plans, the DMT distributes the draft sampling plan to the HGs, EPD analysts, and FP as appropriate. A two-week review period is provided for input and changes to the draft plan. The SPACT sampling plan tables are then updated according to input received.

6.3 Update Sampling Plan Tables. For all sampling plans, the appropriate electronic records are updated by DMT to reflect the draft sampling plan recommendations in the following tables:

driver_events, op_unit, op_unit_set_names, driver_op_unit_accounts, field_locations,samp_collect, locgroups, location, area2.

6.3.1 Create a sampling plan: Login to TAURUS.

Login to SPACT, Sample Planning: Enter driver_code, year,quarter.

Choose "Create plan": a plan code is generated for the plan.
Example: '2007Q1LGIV'.

6.3.2 Edit and proof sampling plan.

Login to TAURUS, SQL/Templates: update query (LLNLSamplingPlan.sql for Livermore Site 200, S300SamplingPlan.sql for S300).

Choose: driver_code, year,quarter, op_unit_set_name. Run query. Download query output as tsv file, and save it as an Excel spreadsheet. Print file. Proof output 100% against the final Sample Plan recommendation spreadsheet provided by the SC.

If changes are required to the existing plan:

Login to SPACT, Sampling Plan: highlight appropriate Plan Code.

Choose "Delete Plan": Re-Create Plan as in Section 6.4.1. Edit and proof sampling plan as in Section 6.4.2.

Repeat Sections 6.4.1 and 6.4.2 until all records are correct.

6.3.3 Finalize Sampling Plan.

Login to SPACT, Sample Planning:

In the Delete/Finalize Plan(s) column, highlight plan you want finalized. Note: Do not finalize a plan until you are certain all rows are correct and complete. There is no un-Finalize process.

Choose: "Finalize Plan" (Plan will be removed from the Delete/Finalize Plan(s) column and appear in the Finalized Plans (Current & Next quarter) column.)

6.3.4 Check for duplicate rows and decide which of the duplicate rows is to be used, if any.

Login to SPACT, View possible duplicates: Enter op_unit_set_name, year, quarter.

Choose "View Duplicates".

If duplicates rows are found, identify rows which will not be used in the sampling plan because another row will satisfy the sampling requirements, by adding the PAID from the row you want to keep in the sampling plan to the "BASE_PAID" field in the row you don't want to keep in the sampling plan, and choose "Submit All Changes".

6.3.5 Add Intra Lab Duplicates (blinded QA) samples, provided by the SC, to the sampling plan, two samples taken at the same sampling location, during the same sampling event, for the same requested analysis. Both samples sent to the same analytical lab using the actual sampling location name for one of the samples, and a blinded QA name for the second sample.

Login to SPACT, Create QA Samples:

Add a blinded QA (Intra Lab Duplicates) sample row, find the row of the actual sample location name. Click on Lab_loc_name (Single QA) DUP link for that row. Enter the blinded QA sample location name.

6.3.6 Add Inter Lab Duplicates samples, provided by the SC, to the sampling plan, two samples taken at same sampling location, during the same sampling event, for the same requested analysis. Samples are sent to different analytical labs, using the actual sampling location name for both.

Note: The Site 300 SC provides the Field Blank IDs to DMT.

Login to SPACT, Create QA Samples:

Add Inter Lab Duplicates sample row, find the row of the actual sample location name. Click on the Labcode (single QA) DUP link for that row. Enter the labcode for the second sample.

6.3.7 Create sampling events for samplers to schedule sampling events and create Chain of Custody's and sample bottle labels.

Login to SPACT, Create Sampling Events: Select op_unit_set_name, norm_year, norm_qtr, View Groupings. Select rows you want.

Choose "Create Sampling Events":

Notify samplers the sampling plan is ready to schedule sampling events.

A copy of the final quarterly sampling plan is stored electronically.

6.4 Electronic Ground Water Sampling Data Sheets. Electronically generated ground water sampling Data Sheets are produced from SPACT by the FP at the time the COC is created.

6.5 Revise Final Sampling Plan. A request must be made via email to modify the final SPACT plan after the quarter begins. The requested change will result in modifying the SPACT tables. Modification of the sampling plan is highly recommended during the draft development phase and not after the quarter has begun and the plan has been finalized.

7.0 QA RECORDS

7.1 Copy of the Sampling Plan

8.0 ATTACHMENTS

Not applicable.

LLNL Environmental Restoration Division (ERD)
Standard Operating Procedure (SOP)

ERD SOP 5.20: Cost Effective Sampling (CES) Algorithm Preparation—Revision: 0

AUTHOR(S):
D. MacQueen

ENVIRONMENTAL RESTORATION DIVISION
CONTROLLED COPY
_____
THIS IS A RED STAMP
ERD

APPROVALS: **Date**

Albert L Lamarre 02/02/01
Division Leader

1/31/01
Environmental Chemistry and Biology Group Leader

CONCURRENCE: **Date**

Valerie Dibley 1/26/01
QA Implementation Coordinator

1. PURPOSE

The purpose of this SOP is to prepare statistically based ground water sampling frequency recommendations. The method used to produce the recommendations is referred to as the Cost Effective Sampling (CES) Algorithm.

The algorithm is based on the following principles applied to a database of previously measured chemical concentrations in ground water:

- The greater the measured trend (average change in concentration per year), the greater the sampling frequency.
- The greater the measured variability, the greater the sampling frequency.

2. APPLICABILITY

Applicability of the CES algorithm to particular wells and analytes is decided on a case by case basis by ERD project staff. In general, it is applicable to wells being used for routine monitoring

of known ground water contaminants, and is not applicable to wells in active use for remediation, such as pump and treat wells.

This document focuses primarily on tasks performed by the Algorithm Custodian (see Section 0) while performing an algorithm run (see Section 0), and to a lesser extent on tasks performed by the Quality Control (QC) Chemist.

3. REFERENCES

3.1 Dibley, V. R. and R. Depue (2000). SOP-2.11, "Developing Ground Water Monitoring Sampling Plans" (UCRL-109115 Rev. 8).

3.2 Ridley, M. R. (1999). Cost-Effective Sampling of Groundwater Monitoring Wells: A Data Review & Well Frequency Evaluation (UCRL-AR-133310).

4. DEFINITIONS

The following definitions are specific to this procedure:

CES Algorithm	The Cost Effective Sampling (CES) Algorithm is a system that is used to prepare statistically based ground water sampling frequency recommendations.
CES Algorithm run	The use of the CES Algorithm computer codes to produce sampling frequency recommendations.
CES Cutoffs	The statistical criteria used by the CES algorithm to determine the sampling frequency.
CES Final recommendation	A sampling frequency recommendation made by the project staff after consideration of the QC recommendation.
CES Planning quarter	The quarter for which a sampling plan is being prepared.
CES Previous quarter	The quarter before the planning quarter.
CES QC recommendation	An algorithm-based recommendation after review by the QC chemist.
CES Raw recommendation	A recommendation produced by the CES algorithm computer program, before review by any human being.
CES Working directory	The Unix directory containing the computer files for a particular CES algorithm run.

5. RESPONSIBILITIES

5.1 Algorithm Expert

The algorithm expert is the individual most responsible for developing and evaluating the algorithm.

5.2 Quality Control (QC) Chemist

For wells and chemicals where the algorithm recommendations are used as minimum-permitted sampling frequencies (see ERD SOP-2.11), only the QC chemist is authorized to reduce the sampling frequency relative to the raw recommendation. The QC chemist is responsible for identifying cases where the algorithm failed, and providing recommendations for those cases.

5.3 Statistician

The statistician works with the algorithm expert developing the algorithm.

5.4 Project Staff

The project staff are the scientists and engineers responsible for deciding which wells and chemicals are submitted to the CES algorithm, and for using the algorithm recommendations to produce a sampling plan.

5.5 Sampling Coordinator

The sampling coordinator is the individual responsible for scheduling the sample collection effort.

5.6 Sampling Plan Custodian

The sampling plan custodian maintains lists of algorithm wells and an electronic version of the final sampling plan in the database. See ERD SOP-2.11.

5.7 Algorithm Custodian

The algorithm custodian is responsible for performing routine algorithm runs. The algorithm custodian is responsible for computer source code development and maintenance, under the direction of the algorithm expert and the statistician. This procedure assumes that the Algorithm Custodian is familiar with the Unix operating system, SAS software, the EPD database, and SQL database programming.

6. PROCEDURE

The algorithm is run for the Livermore Site each calendar quarter (the “previous” quarter) to generate recommendations for the following calendar quarter (the “planning quarter”). The algorithm is run as needed at Site 300. Normally, an algorithm run is initiated about four to six weeks before the beginning of the planning quarter.

6.1 Procedure Overview

Steps to perform an algorithm run are these:

1. If necessary, the project staff review the list of wells to which the algorithm is applied and the sampling plan custodian updates the list.

2. The algorithm custodian runs computer programs to retrieve data and calculate raw recommendations.

3. The QC chemist reviews the raw recommendations. He or she identifies cases where the algorithm failed (if any) and makes recommendations for such cases.

4. The algorithm custodian prepares the recommendations for review by the project staff.

5. Project staff review the recommendations to identify wells at which a different sampling frequency is appropriate (see ERD SOP-2.11).

6. Project staff submit the final sampling decisions to the sampling coordinator and sampling plan custodian.

7. The algorithm custodian stores the raw recommendations in the database.

See Section 0 for a more detailed description of the steps performed by the Algorithm Custodian and QC Chemist.

6.2 Computer Resources

The software components of this system include:

- Analytical results from previous ground water samples, stored in a relational database management system (RDBMS).
- A current sampling plan stored in the database.
- Computer programs that perform the algorithm calculations.
- Data transfer capability between the algorithm software and the database.
- Spreadsheets.
- A World-Wide-Web (WWW) server.
- Scripts used by the WWW server to display the algorithm results.

At present the database is maintained using Ingres® software. The algorithm calculations use SAS® software, and the spreadsheets use Microsoft Excel.®

The computer hardware components of this system include:

- Unix workstations.
- Personal “desktop” computers.
- Hard disk space sufficient to store the necessary computer files.
- Network connections between the Unix and desktop systems.

At present the Ingres database and the SAS software run on Sun Microsystems SparcStation® Unix systems. The spreadsheets reside on Macintosh® computers.

All CES algorithm Unix files are stored in the CES file system, whose root directory is `/erd/statistic/project/ces`. The CES root directory name is stored in the Unix environment variable CESHOME.

Table 1 lists the principal computer program subdirectories and their purposes.

Table 1. Principal algorithm computer program subdirectories.

Directory	Description
`sas`	SAS computer programs
`macros`	SAS macros used by the SAS programs
`review`	Computer programs used for WWW review of the recommendations
`wwwssd`	Data used for WWW review of the recommendations
`library`	Custom SAS formats used for labeling plots and output

6.2.1 Algorithm Run Identification

Each algorithm run is uniquely defined by the set of wells in the run, the analytes that are evaluated at those wells, and the planning quarter. The set of wells is called a "site" and the analytes are referred to as a "www group". (The term "www group" is used in relation to the WWW review phase of an algorithm run.)

In the computer programs the site, www group, and planning quarter are referred to using abbreviations, or "codes". These codes are used in directory and file names in order to help keep the system organized and to identify the purposes and contents of directories and files. Table shows examples of some identification codes.

Table 2. Examples of algorithm run identification codes.

Site	Site code	Planning quarter	Quarter code	WWW group code
Livermore	`s200`	`1999-3`	`99-3`	(not used)
Livermore	`s200`	`1999-4`	`99-4`	(not used)
Site 300, EFA/WFA	`ewfa`	`2000-4`	`00-4`	`voc`
Site 300, EFA/WFA	`ewfa`	`2000-4`	`00-4`	`othr`

6.2.2 Algorithm Run Directories

The site, www group, and planning quarter codes are used to name the algorithm run directories.

There is a root directory for each site. For the Livermore Site, the root directory is named `$CESHOME/s200`. For Site 300, the root directories have names of the form `$CESHOME/s3.sitecode`. For example, runs for the EFA/WFA study area at Site 300 are in the directory named `$CESHOME/s3.ewfa`.

At the Livermore Site, there is only one analyte group, so the www group code is not used. Within the Livermore Site root directory there is a directory for each planning quarter. The working directories have names of the form `sfyy-q` where `yy-q` is the quarter code. See Table 2 for examples.

At Site 300, some sites have more than one www group. Within such Site 300 root directories there are directories for each www group and planning quarter. Working

directories for Site 300 have names of the form `$CESHOME/s3.sitecode/wwwcode/sfyy-q`, where `yy-q` is the quarter code, `wwwcode` is the www group code, and `sitecode` is the site code. If there is only one www group, the intermediate directory (`wwwcode`) may be omitted. See Table 2 for examples.

It is not required that these naming conventions be followed precisely. It is strongly recommended that the directory names incorporate the site, www group, and planning quarter codes.

Table 2 shows some example working directory names.

Table 2. Example of algorithm run working directory names.

Working directory name	Description
`$CESHOME/s200/sf99-3`	**Livermore Site run for VOCs, planning for Q1999-3**
`$CESHOME/s200/sf99-4`	**Livermore Site run for VOCs, planning for Q1999-4**
`$CESHOME/s3.ewfa/voc/sf00-1`	**Site 300 EWFA run for VOCs, planning for Q2000-1**
`$CESHOME/s3.ewfa/othr/sf00-1`	**Site 300 EWFA run for analytes other than VOCs, planning for Q2000-1**

6.3 Algorithm Custodian Tasks

The following is a concise summary of the steps to follow.

1. Verify that the list of wells has been reviewed and, if necessary, updated.
2. Create a new working directory (within the appropriate site and www group directory).
3. Move to the new working directory.
4. Create new subdirectories for input, output and data files.
5. Copy command and control files from the previous quarter's directory.
6. Edit the files to reflect the current quarter.
7. Review the control files and make any necessary changes.
8. Run the SAS program `getdat.sas`.
9. Run the SAS program `runalg.sas`.
10. Convert the QC chemist review file to spreadsheet format and deliver it to the QC chemist for review.
11. Receive the edited spreadsheet from the QC chemist and save it in tab delimited text format.
12. Run the SAS program `runtl.sas`.
13. Convert the project staff review file to spreadsheet format and deliver it to the project staff.
14. After the previous steps are complete (and when it is highly unlikely that step 9 will be repeated), run the SAS program `addbien.sas`.

The following sections provide details and indicate who is responsible for each step.

6.3.1 Verify that the Well List has been Reviewed (Section 6.3, step 1)

To begin an algorithm run the algorithm custodian should ask the sampling plan custodian to give the project staff a list of wells currently designated for the algorithm run. The project staff should review this list. If there are changes the project staff should inform the sampling plan custodian, who will update the list. The sampling plan custodian then informs the algorithm custodian that the list is ready.

The lists of wells for each site are maintained in the database table `locgroups`. Location group names start with the string "`alg`". Some example include `alg_ls` (Livermore Site), `alg_ewfa` (Site 300 EWFA), and `alg_834` (Site 300 B834). New location groups should be created when needed for new sites.

6.3.2 Create Working Directory (Section 6.3, steps 2, 3, 4)

The algorithm custodian performs this step.

Log in to a Unix computer in the ERD network and move to the appropriate site and www group directory (see Section 6.22).

Create the new working directory in the appropriate site and www group directory (see Section 6.22).

Move to the working directory and create four subdirectories named `raw`, `ssd`, `in`, and **`out`**. The computer programs expect to find subdirectories with these names, therefore these names *must* be used. The contents of these subdirectories are:

raw Contains SAS format files of chemical data as retrieved from the database and prepared for the algorithm run.

ssd Contains SAS format files created by the algorithm run. These include the data as used by the algorithm run, summary statistics, and the raw recommendations.

out Contains ascii (tab delimited text) format files output by SAS and used to create the spreadsheets for the reviewers.

in Contains ascii (tab delimited text) format versions of the spreadsheets after they have been reviewed.

6.3.3 Prepare Command and Control Files (Section 6.3, steps 5, 6, 7)

The algorithm custodian prepares the necessary command and control files, as described below. If necessary, log in to a Unix computer in the ERD network and move to the working directory.

The easiest way to prepare the files is to copy them from the previous planning quarter's directory for the same site and www group, and edit them to reflect the new planning quarter.

There are two categories of files necessary to perform an algorithm run: command files and control files. In addition, there should be an informational file named README.

Command files contain the computer programs that perform the algorithm run. The required command files are:

```
autoexec.sas   runtl.sas
getdat.sas  addbien.sas
runalg.sas
```

The name `autoexec.sas` is required by the SAS software system and must not be changed. The other names should not be changed.

Control files contain information that controls various aspects of how the run is performed. The required control files are

`control.sas`
`cutoffs`
`mcls`
`guard`

The name `control.sas` is required and must not be changed.

The other control files have names that depend on the site. At the Livermore Site, they are named `cutoffs.s200`, `mcls.s200`, and `guard.s200`. At other sites, different file name suffixes may be used, but the first part (`cutoffs`, `mcls`, and `guard`) should not be changed. If necessary, edit `control.sas` to reflect the names that are used.

Inspect the README file from the previous quarter for any notes that may have relevance for the planning quarter. Add notes as needed. Update it to refer to the planning quarter.

In the SAS command files (`autoexec.sas`, `getdat.sas`, `runalg.sas`, `runtl.sas`, and `addbien.sas`) update all references to the planning quarter. Use the format `yyyy-q` for the quarter (e.g., `1999-1`).

In `control.sas`, update the values of the variables `basedate`, `cutdate`, `shistlo`, and `shisthi`. Normally, `basedate` is one month before the beginning of the planning quarter and `cutdate` is the beginning of the planning quarter. Normally, `shisthi` is the year of the previous quarter and `shistlo` is 8 years before. For example, if planning for Q1999-1, then `shistlo=1991` and `shisthi=1998`, but when planning for Q1999-2 then `shistlo=1992` and `shisthi=1999`.

Review the names of the input and output files defined in `control.sas`. Most of the file names are constructed from the site, www group, and quarter codes, and normally should not be changed.

If instructed to do so by the algorithm expert or statistician, edit additional variables in `control.sas` or the values in the `cutoffs`, `mcls`, and `guard` files, and make a note in the README file.

Normally, data is retrieved from the most recent Gemini database. `getdat.sas` is configured to automatically determine which Gemini database is the most recent. If necessary, `getdat.sas` may be edited to use a particular Gemini database, or the production database, EPDDATA.

If this is a run for a new site or www group then `getdat.sas` will require editing in order to retrieve the correct data from the database. If necessary, consult with the sampling plan custodian or member of the data management staff.

All of the command files should have comments near the beginning of the file that include the filename, the date the file was created, and any other comments that may be useful. It is good practice update these.

6.3.4 Retrieve Data from the Database (Section 6.3, step 8)

The algorithm custodian performs this step. If necessary, log in to a Unix computer in the ERD network and move to the working directory.

Execute the SAS program that retrieves data from the database by typing the Unix command

```
sas getdat
```

This step retrieves data for selected wells and chemicals from the most recent `gemini` database. The SAS program determines which `gemini` database is the most recent.

Review the file **getdat.log** for error and warning messages.

The files `getdat.lst` should be inspected for indications of problems. If there are wells that are specified in the database as part of the algorithm run, but for which there is no data, they will be listed in `getdat.lst`.

6.3.5 Calculate Raw Recommendations (Section 6.3, step 9)

The algorithm custodian performs this step. If necessary, log in to a Unix computer in the ERD network and move to the working directory.

Execute the SAS program that calculates raw recommendations by typing the Unix command

```
sas runalg
```

This step fits statistical models to the data, compares the results to criteria in the cutoffs, guard, and mcls files, and determines recommended sampling frequencies.

Review the file `runalg.log` for error and warning messages.

Review output files for indications of problems. In particular, inspect the files `out/abbrev.lst`, `out/uniterr.lst`, and `out/coderr.lst`. Samples with inconsistent units, if any, will be listed in `uniterr.lst`. This file may be empty, indicating that all units are correct. The files `abbrev.lst` and `coderr.lst` will indicate discrepancies, if any, between analyte names used in the input data and analyte names used in the `cutoffs` file. This is especially important to review when preparing files for a new www group.

6.3.6 Prepare for Review by QC Chemist (Section 6.3, step 10)

The algorithm custodian performs this step. If necessary, log in to a Unix computer in the ERD network and move to the working directory.

Convert the QC chemist review files to Excel format and deliver them to the QC chemist.

The output file names are found in control.sas, as the values of the macro variables "`ssout`", "`chmout`", and "`ndchmout`". For example, the "`ssout`" spreadsheet might be named `LS2000-4.a`, as a result of the statement "`%let ssout=out/LS&qtr..a;`" in `control.sas`.

6.3.7 Review by QC Chemist (Section 6.3, step 10)

The QC chemist performs this step.

The "`ssout`" spreadsheet contains a column whose heading is "`Rev`" (an abbreviation of "Review"). The QC chemist enters his or her review decisions in this column. Entries are made only in cells with a "~" in them. When the QC chemist does not change a recommendation, the "~" is left unchanged.

The QC chemist may change the spreadsheet name.

The other spreadsheets ("chmout" and "ndchmout") are for information only; they contain results from the algorithm run that the QC chemist may wish to consult during review.

The QC chemist returns the edited spreadsheet to the algorithm custodian.

6.3.8 Receive Results of QC Chemist Review (Section 6.3, step 11)

The algorithm custodian performs this step. If necessary, log in to a Unix computer in the ERD network and move to the working directory.

Make a tab-delimited ascii copy of the edited spreadsheet and put it in the subdirectory 'in'. The file name should be the same as the spreadsheet name, but with the suffix '.a' appended.

Set the variable revin in runtl.sas to the name of the converted spreadsheet file (the variable revin may optionally be set in control.sas instead).

6.3.9 Prepare for Review by Project Staff (Section 6.3, steps 12, 13)

The algorithm custodian performs this step. If necessary, log in to a Unix computer in the ERD network and move to the working directory.

Verify that the input file name in is correct (see Section 6.3.8).

Execute the SAS program that prepares for project staff review by typing the Unix command

```
sas runtl
```

Convert the project staff review file to Excel format and deliver it to the project staff for review. The output file name is found in runtl.sas as the value of the SAS macro variable "tlss" (the variable tlss may optionally be set in control.sas instead).

This step also prepares SAS datasets for use by the graphical review program that is accessed via the WWW. The WWW review page is within the password protected "ERD Only" internal web pages.

When project staff review is complete, the project staff deliver the reviewed recommendations to the Sampling Coordinator and the Sampling Plan Custodian, and inform the Algorithm Custodian.

6.3.10 Append Raw Recommendations (Section 6.3, step 14)

The algorithm custodian performs this step. If necessary, log in to a Unix computer in the ERD network and move to the working directory.

After all of the above steps are complete, and it is highly unlikely that program runalg.sas will be rerun (See Section 6.3.0), the raw recommendations must be uploaded to the database. This makes them available for the next algorithm run. In order to perform this step the algorithm custodian must have insert privileges on the database table ces_raw_rec.

Type the Unix command

```
sas addbien
```

6.3.11 Data Storage

The computer program files, log files, output files, and input files are kept online for up to one year, after which they are kept on backup tapes.

7. QA RECORDS

The final sampling plan, created after the project staff have completed their review (see ERD SOP-2.11), is the QA Record for this procedure.

8. ATTACHMENTS

Not applicable.

LLNL Environmental Restoration Department (ERD)
Standard Operating Procedure (SOP)

ERD SOP 6.1: Decontamination and Decommissioning (D&D) Team - Standard Operating Procedure 001 —Revision: 2

AUTHOR:
Michele Dermer

APPROVALS: **Date**

Jesse Yow 3/20/09
Department Manager

B M. Dibble 3/20/09
Decommissioning & Demolition Team Leader

CONCURRENCE: **Date**

[signature] 3/20/2009
ES&H Team Leader

Rebecca Goodrich 3/20/09
QA Implementation Coordinator

Type of Procedure (per ES&H Manual, Document 3.4)

☐ Informational Use ☒ General Use ☐ Continuous Use

Table of Contents

1.0 PURPOSE 5
2.0 APPLICABILITY 5
3.0 REFERENCES 5
4.0 RESPONSIBILITIES 6
4.1 Department Manager 6
4.2 Decommissioning and Demolition (D&D) Team Leader/Authorizing Individual (AI) 6
4.3 Project Manager (PM)/Responsible Individual (RI) 6
4.4 D&D Personnel Team 6
4.5 SOP Responsible Individual (RI) 6
5.0 SCOPE OF PROCEDURE 7
6.0 GENERAL D&D PROJECT REQUIREMENTS 8
6.1 Integrated Safety Management 9
6.2 Project Management 9
6.2.1 Workforce Planning Documentation 10
6.2.2 Project Management Meetings 10
6.2.3 Project Controls 10
6.2.4 Property Disposition 10
6.3 Work Authorization 11
6.4 Project Access Control 12
6.4.1 Access Authorization 13
6.4.2 Equipment Operations 13
6.5 General D&D Project Hazards and Controls 14
6.6 Stop Work Safety Contols 14
6.6.1 Partial Stop Work 14
6.6.2 Whole Stop Work 15
6.7 General Employee Responsibilities 15
6.8 Personal Protective Equipment (PPE) 15
6.9 General Health and Safety Controls 16
6.10 Color Coding 17
6.10.1 National Standard Underground Utility Identification Color Code 17
6.10.2 D&D Above Grade Color Coding 18
6.11 Staging Area 19
6.12 Hazardous Materials 20
6.13 Respiratory Protection 21
7.0 HAZARDS ANALYSIS AND CONTROLS 22
7.1 Asbestos-Containing Materials 22
7.2 Lead-Containing Materials 23
7.3 Mercury 24
7.4 Mold 25
7.5 Radioactive Materials 25

7.5.1 External Dosimetry Requirements 26
7.5.2 Internal Dosimetry Requirements 26
7.5.3 Radiological Practices 27
7.6 Beryllium 28
7.7 Noise 29
7.8 Nuisance Odors, Dust, and Noise 29
7.9 Confined Spaces 30
7.10 Material Handling 30
7.11 Rigging, Hoisting, and Lifting Operations 30
7.12 Power-Driven Tools and Equipment 31
7.13 Trips/Falls/Working at Heights 31
7.14 Heat Stress 32
7.15 Electrical 32
7.16 Mechanical 34
7.17 Heavy Equipment 35
7.18 Traffic 36
7.19 Fire Safety and Fire Departmetn Access 36
7.20 Soil, Asphalt and Concrete Penetration 38
7.21 Explosives Contamination 39
7.22 Sewage 40
7.23 Perchlorates 41
7.23.1 Level One Perchlorate Controls *42*
7.23.2 Level Two Perchlorate Controls *43*
7.24 Stored Energy 44
8.0 ENVIRONMENTAL REGULATORY IMPACTS, NOTIFICATIONS, PERMITS AND CONTROLS 44
8.1 Sampling Plans 44
8.2 RCRA and/or CERCLA Permitted Facilities 45
8.3 Demolition and Renovation Environmental Controls 45
8.3.1 Demolition Notification 46
8.3.2 Asbestos Containing Material Abatement Notification and Controls 46
8.3.3 Abrasive Blasting 47
8.3.4 Surface and Ground 47
8.4 Disposal of Materials 48
8.4.1 Waste Generation 48
8.4.2 Non-Hazardous Building Debris 49
8.4.3 Wastewater Discharges 49
8.4.4 Concrete Wastewater Management 50
8.4.5 Waste Accumulation Areas 50
8.5 D&D Standard Operating Procedures 51
8.6 Satellite Accumulation Area (SAA) 52
8.7 Waste Minimization and Pollution Prevention 53
8.8 Storm Water Pollution Prevention 54
8.8.1 Project Site Perimeter Control 54
8.8.2 Erosion Control 54

8.8.3 Material and Waste Storage and Handling 54
8.8.4 Good Housekeeping 55
8.8.5 Inspections 55
8.8.6 Training 55
8.8.7 Final Stabilization 55
9.0 TRAINING AND REQUIRED READING 55
10.0 EQUIPMENT MAINTENANCE AND INSPECTIONS 55
11.0 PROJECT QUALITY ASSURANCE 56
12.0 EMERGENCY RESPONSE PLANS AND PROCEDURES 56
12.1 Personnel or Area Contamination 56
12.2 Standard Decontamination Procedures for Personal Clothing or Skin Contamination 57
13.0 ACRONYMS AND ABBREVIATIONS 58

Tables

Table 1. Standards and Limits for Occupational Exposure to Airborne Beryllium

Attachments

Attachment A — SOP Communication Form
Attachment B — D&D Team Communication Flow Process Diagram
Attachment C — D&D Team OSHA Regulations, Subpart T-Demolition
Attachment D — Workforce Planning Documentation
Attachment E — Monthly Accounting Tracking Tool (MATT) Example
Attachment F — D&D Protocols
Attachment G — Sample Plan for Waste Characterization
Attachment H — D&D Generic Standard Operating Procedures

1.0 PURPOSE

The purpose of this Standard Operating Procedure (SOP) is to provide general instructions to all Livermore Site and Site 300 Deactivation, Decommissioning, Decontamination, and Demolition (D&D) Team Personnel concerning activities required to be performed before, during, and after D&D activities. These instructions are to ensure that D&D team personnel understand the site, the objective and schedule of the D&D program, their authority, and their responsibilities.

D&D work activities are not sufficiently addressed in the Lawrence Livermore National Laboratory (LLNL) Environmental Safety & Health (*ES&H) Manual*. Therefore, the D&D Team has developed this SOP to identify the typical hazards that may be encountered on a D&D project, to establish consistent controls, and to document uniform procedures for implementing the controls to ensure safe consistent work practices throughout D&D projects.

The LLNL Integrated Work Sheet (IWS) process is used on all D&D projects to document the project specific hazards, controls, and training. This SOP will be referenced and attached as necessary to the project specific IWS(s), thereby ensuring that the LLNL Environment, Safety & Health (ES&H) manual requirements and the D&D operational requirements work in concert to establish and maintain the necessary safety envelope for a D&D project.

2.0 APPLICABILITY

This SOP will act and serve as the Safety Plan (SP) for all D&D projects, unless otherwise noted. These instructions apply to all D&D personnel who conduct work at Site 300 and the Livermore Site for the ERD.

3.0 REFERENCES

3.1 Lawrence Livermore National Laboratory (LLNL) Environment, Safety, and Health Manual.

3.2 Waste Acceptance Criteria (WAC) (UCRL-MA-115877).

3.3 Department of Energy (DOE) Order 430.1B, Real Property Asset Management.

3.4 DOE Order 413.3A, Program and Project Management for the Acquisition of Capital Assets.

3.5 DOE G 430.1-2, Implementation Guide for Surveillance and Maintenance during Facility Transition and Disposition.

3.6 DOE G 430.1-3, Deactivation Implementation Guide.

3.7 DOE G 430.1-4, Decommissioning Implementation Guide.

3.8 DOE G 430.1-5, Transition Implementation Guide.

3.9 DOE/EM/0383, Decommissioning Handbook.

4.0 RESPONSIBILITIES

4.1 Department Manager (DM)

The DM's responsibility is to ensure that all activities performed by ERD at the Livermore Site and Site 300 are performed safely and comply with all pertinent regulations and procedures, and provide the necessary equipment and resources to accomplish the tasks described in this procedure.

4.2 Decommissioning and Demolition (D&D) Team Leader/Authorizing Individual (AI)

The D&D Team Leader/AI is to ensure that all activities are performed safely and comply with all pertinent regulations and procedures, work is authorized through an IWS, and there is sufficient funding to initiate the work.

4.3 Project Manager (PM)/Responsible Individual (RI)

The PM is responsible for safely executing assigned projects in accordance with this SOP. The PM's responsibilities include completing the initial workforce planning documentation and conducting project management meetings at established intervals from project inception to property disposition. The PM also serves as the IWS RI who follows an established process to ensure work authorization is obtained through an approved IWS.

4.4 D&D Personnel Team

The D&D Personnel Team consists of workers who are qualified and authorized to carry out D&D operations within the confines of the safety envelope established by this procedure and project-specific IWSs, as well as all other applicable ES&H and regulatory requirements.

4.5 SOP Responsible Individual (RI)

The SOP RI is responsible for ensuring that ALL work is performed in conformance with this SOP as well as applicable sections of the LLNL *ES&H Manual.* In the absence of the SOP RI, an individual SHALL be assigned to assume these responsibilities. The Authorizing Individual (AI) for this document is the D&D Team Leader.

The SOP RI SHALL:

a) Review and discuss ANY changes to this document with ALL operating personnel.

b) Upon completion of training, ensure Attachment A, SOP Communication Form, is completed and submitted to the ERD Quality Assurance Office for filing.

c) Ensure each team member is qualified and authorized to perform or assist in performing operations covered within this SOP.

4.5.1 Responsibility Assignment / Delegation

Using this SOP as the controlling basis, the SOP RI or Alternate may assign and/or delegate responsibility to project leaders identified as an RI in a project specific IWS. Where assigned, that individual becomes the Project Responsible Individual (Project RI), accountable for ensuring conformance and compliance for work performed under the controls of this SOP and as outlined in the Authorized IWS.

4.5.2 SOP Variances

The SOP RI may grant written variances to this SOP on a case-by-case basis. Before granting a variance, the SOP RI shall consider the safety significance and consult with the ES&H Team Leader or Deputy, as necessary.

4.6 Communication Flow Process

Attachment B illustrates the communication flow process to be followed on all D&D projects to ensure all decision makers are informed in a timely manner and decisions are communicated in an orderly fashion.

5.0 SCOPE OF PROCEDURE

This SOP addresses the ES&H issues affecting D&D personnel and laboratory personnel in close proximity to D&D activities. It does not consider the health and safety effects to unauthorized personnel willfully challenging either a D&D Project or surrounding D&D access controlled areas.

The content of this document provides project management guidance requirements for D&D activities on buildings that are surplus or excess to LLNL Program needs or those undergoing modification. These activities are broadly defined below:

a) The deactivation process places a building in a safe and stable condition by removing accessible hazardous and radioactive materials to minimize the long-term cost of a surveillance and maintenance program that is protective of workers, the public, and the environment. Typical activities in this process include removal of radioactive material and chemicals as well as isolation of all utilities.

b) The decontamination process includes the removal or reduction of residual radioactive and hazardous materials by mechanical, chemical, or other techniques to achieve a stated objective or end condition.

c) The decommissioning process involves elements of both the deactivation and the decontamination processes and is typically performed in two phases. One phase is programmatic decommissioning, which includes actions taken at the end of the life of a program within a building to retire program related equipment from service. The second phase of the decommissioning process involves facility decommissioning which entails the steps necessary to retire a facility at the end of its useful life in preparation for the

demolition process. Adequate regard for the health and safety of workers, the public, and protection of the environment is used at all times during the process.

d) The demolition process involves removal of any structure, system, or component during the decommissioning phase. The term Demolition may be used to describe activities ranging from removal of a fume hood to destruction of an entire building.

The hazards and controls associated with D&D activities SHALL be evaluated on a project-by-project basis in accordance with approved Integrated Safety Management (ISM) policy utilizing the guidance provided in this document, tailored to mitigate hazards unique to specific projects.

6.0 GENERAL D&D PROJECT REQUIREMENTS

D&D labor resources often support multiple projects simultaneously therefore it is imperative that standard job site practices be employed. This section describes the general project practices or requirements that are employed on all D&D projects managed by ERD. They describe the minimum set of project controls that SHALL be consistently followed. Adherence to these requirements ensures that all members of the D&D project can communicate hazards, implement safety controls, and be cognizant of each other's safety at all times. The general D&D Project Requirements are augmented by additional controls that are required to address specific ES&H hazards and environmental concerns commonly encountered on D&D projects. These additional controls are discussed in Sections 7.0 and 8.0, respectively.

For all D&D projects a disposition plan must be prepared. The disposition plan must integrate ES&H requirements into disposition activities in accordance with DOE STD 1120-98, Integration of Environment, Safety, and Health into Facility Disposition Activities, dated May 1980. The disposition plan should be tailored based on the disposition baseline and disposal method to be used (e.g., reuse, demolition, or decommissioning) and must consider DOE P 455.1, Use of Risk-Based End States and the guidance in the following Guides:

- DOE G 430.1-2, Implementation Guide for Surveillance and Maintenance during Facility Transition and Disposition;
- DOE G 430.1-3, Deactivation Implementation Guide;
- DOE G 430.1-4, Decommissioning Implementation Guide; and
- DOE 430.1-5, Transition Implementation Guide.

In accordance with DOE Order 430.1B, Real Property Asset Management, the disposition plan shall include the following:

(a) A method for identifying, evaluating, and selecting disposition alternatives and long term stewardship (LTS) requirements. Selection of the preferred disposition alternative needs to be documented and be in accordance with relevant regulatory standards. Stakeholder involvement is required in the development of LTS plans.

(b) The identification and completion of required activities related to historical preservation.

(c) A post-closure/post-disposition/LTS records turnover or retention plan.

(d) Surveillance and maintenance plans for facilities and land parcels with residual contamination, hazards, or other conditions that are projected to require post-disposition LTS. These plans must identify appropriate management and funding requirements to ensure ES&H regulatory compliance and meet relevant requirements of treaties, agreements, or other DOE commitments.

(e) A process to track status of LTS actions, including gap analysis of the LTS transition framework to identify actions remaining before end-point conditions are satisfied. This should include a method to periodically reassess monitoring requirements and make any necessary revisions.

(f) Development of specific end-point criteria for declaring disposition complete.

(g) Cost and schedule information for disposition activities and any follow on surveillance and maintenance and LTS requirements must be identified in the Ten Year Site Plan (TYSP).

6.1 Integrated Safety Management

The overarching expectation of management is that all D&D projects fully utilize an ISM approach in the scoping, planning, performing, and closeout phases. This means that all D&D project participants SHALL provide input into project planning and execution to obtain and achieve safe, cost effective project completion.

The primary ISM communication tool used on D&D projects is the IWS. All D&D projects SHALL utilize an IWS containing a scope of work, identification of known or anticipated hazards, and the controls required to mitigate the hazards.

A key element of ISM is prompt communication when an unplanned event occurs. Attachment B provides a flow diagram of the communication process that shall be used by the project team when an unplanned event occurs. This SOP does not authorize the work activities described herein but defines mandatory supplemental controls that are incorporated into the project by reference in the IWS.

In addition, prior to demolition, in accordance with Occupational Safety and Health Administration (OSHA) requirements, Subpart T- Section 1926.850 (Attachment C), a structural engineering survey must be performed to determine the condition of framing, floors, and walls, and any possibility of unplanned collapse of any portion of the structure. Written documentation of the survey must be provided.

6.2 Project Management

To the extent practicable, Project Managers (PMs) shall follow the Facilities & Infrastructure (F&I) Project Management and Project Controls procedures. It should be noted that specific actions taken for a disposition project may be different from a construction project. As such, PMs shall follow the specific procedures for the individual program, such as Transformation Disposition. In that case, PMs shall also refer to the Transformation Disposition Program Management Plan.

6.2.1 Workforce Planning Documentation

The initial activity conducted by the PM is to complete the workforce planning documents. These documents consist of three Excel spreadsheets: Project Pipeline, Resource Loading, and Project Assignments (Refer to Attachment D).

6.2.2 Project Management Meetings

The following are the standard PM required meetings:

- Weekly PM meeting with the integrated project management team to review safety, progress, schedule, production and cost. The PM will submit the submittal status table and register for review at this meeting.
- Monthly internal project review meeting – each PM will present and discuss the variance report for each of their projects using the Monthly Activity Tracking Tool (MATT) format example. An example of this report is included as Attachment E.
- Monthly project reviews with the DOE Federal Project Director – PM will review the draft monthly report from Baseline Accounting Report Tracking Tool (BARTT). The DOE Federal Project Director will provide comments on the report. This report is only used for Facilities and Infrastructure Recapitalization Program (FIRP) or Transformation Disposition (TD) projects.
- Quarterly program reviews with the DOE Federal Program and Federal Project Directors. The PM formally will present the final BARTT reports for the quarter. This report is only used for FIRP or TD projects.

6.2.3 Project Controls

The PM works with the assigned Project Controls scheduler and establishes a resource-loaded baseline schedule at the beginning of each project. The project schedule and budget is then monitored periodically by the project controls scheduler (monthly, quarterly, annually, etc). For projects valued at greater than $100,000, the cost and schedule information is included in the F& I project controls system. For projects less than $100,000, only scheduling is included.

6.2.4 Property Disposition

The Project RI shall ensure that all controlled property is dispositioned prior to moving the property. A clean Sun Flower report will be obtained prior to demolition. This report is proof that no property was inappropriately destroyed. See Attachment F for Property Relocation Requirements.

6.3 Work Authorization

All D&D project work SHALL be authorized for execution through the use of an IWS. At a minimum, each project SHALL proceed as follows to obtain authorization and establish the required controls:

a) An initial roundtable discussion SHALL take place to include the Project RI, the client, D&D Team members, applicable ES&H Team members, and applicable support staff (e.g., utility locators, high voltage, mechanical utilities, materials management, etc.) in order to brief team members on the following:

- The intent and goal of the total scope of work;
- Applicability of this SOP, identification of other relevant controlling documents, and requirements for the IWS;
- Review of current condition of facility (e.g., potential contamination, level of characterization, infrastructure status, neighborhood impact, etc.) AND
- Initiation of a pre-job assessment to address project-specific hazards and controls beyond the scope of this SOP.
- Review of current safety basis documents (Facility Screening Report, Safety Auditing Report, etc.)

Note: Prior to commencing work activities, the RI shall contact the Facility Management Department and/or safety review group to determine if a revision to the safety basis documents is required.

b) Group familiarization site walk down(s) by ALL applicable personnel;

c) Collection and review of associated pertinent historical files;

d) Second roundtable discussion to confirm total hazard control mitigation strategy and implementation/project execution plan. (Note: On some projects this meeting may occur concurrent with the pre-start meeting as determined by the Project RI).

e) A pre-start meeting conducted just prior to the start of work, at the work site, SHALL include:

- Review of the complete scope of work;
- Review of ALL applicable safety plans and controls;
- Review the roles and responsibilities of the staff involved in the work and
- Project communications, posting requirements, Plan Of the Day (POD), Tailgate, and other meetings;
- Review the cost account, schedule, and end state of project and
- Stop Work Responsibilities.

f) Upon conclusion of a successful pre-start meeting the AI SHALL “AUTHORIZE” the IWS enabling work to commence.

g) Once authorization from the AI to proceed with a D&D project has been granted, D&D Project RIs SHALL initiate Daily Tailgate Meetings, which SHALL include the following:

- Daily, the Project RI SHALL prepare or update a Job Hazards Analysis (JHA) and it is to be reviewed at the tailgate meeting.
- A change in the daily work schedule requires a second Tailgate Meeting to ensure that any and ALL changes are evaluated, communicated, and safely controlled.
- Recorded attendance is a compulsory prerequisite to working on the project.

The introduction or discovery of additional or new hazards, or changes in client requirements that modify the agreed upon budget, scope and timeline as defined in the approved IWS, SHALL be treated as a scope change. Changes in the scope SHALL be reviewed by the RI, client, ES&H Team, and approved by the AI. The approved scope change SHALL be documented in the IWS.

6.4 Project Access Control

Unauthorized access to any D&D Project Area by laboratory personnel, or entry into surrounding experimental areas by D&D workers, has the potential for injury and/or illness through inadvertent exposure to hazardous conditions and interference with high- risk activities.

The following controls SHALL be implemented to reduce risks associated with project access control:

a) The exterior of the D&D project work zone SHALL be enclosed to restrict access. Exterior doors to buildings housing the project's work zone but located outside the restricted access areas SHALL be posted: "Notice – Authorized Personnel Only." Doors SHALL be kept closed AND locked but SHALL remain operable from the inside for emergency egress.

b) Access points to project work zones and at various points around the perimeter SHALL be posted with appropriate notification and control signs, e.g., "Notice – Authorized Personnel Only", "Caution Hard Hat Area", and "Danger Demolition Area".

c) Roles and Responsibilities List identifying name, assigned role, responsibility, and contact information.

d) All personnel entering a D&D project shall sign in and out at a designated access control point (i.e., white board near the gate).

e) The fire department, security department and the project Fire Protection Engineer SHALL approve the location of ALL project boundary fencing. Typically, fencing is to be installed no closer than 1.5 times the building height from the walls being demolished.

6.4.1 Access Authorization

D&D workers or pre-authorized Laboratory personnel are allowed access to the restricted access area. Other personnel may be granted access by the Project RI under the following conditions:

Note: The following D&D authorized escort requirements may be waived by the Project RI if the project area(s) is not posted as a Radiological Area (e.g., Buffer Area, Contamination Area, or Radiation Area) or otherwise controlled for exposure or potential exposure to hazardous or radioactive materials

a) Non project personnel and other visitors must have a legitimate business need for access to a D&D Project area. The requestor MUST provide the Project AI with a written request for access with a clearly defined scope and business reason for requesting such access. The approval of the Project AI is required for all non- project personnel and other visitors. Written approval MUST also be obtained from the employee's supervisor if the individual is an LLNL employee.

b) Personnel requiring unescorted access SHALL read AND sign the copy of the SOP and IWS kept at the project "work site".

c) Non-project personnel requiring access into the project site SHALL be briefed on the JHA and access requirements (i.e., PPE and sign in board). The personnel SHALL be escorted to the work area, released to work, and SHALL check out with the Project RI.

d) Escorted access requires an authorized escort from the Roles and Responsibilities List kept at the worksite. Authorized escorts SHALL have completed the training, examinations, and performance demonstrations (on-the-job-training) required for entry to the area and performance of the work. The authorized escort SHALL brief ALL escorted individuals on the area work hazards and the applicable controls.

e) The Project RI SHALL advise the Facility Managers of surrounding area facilities as D&D activities are scheduled adjacent to their facilities.

f) The Project RI SHALL establish a centralized location for the purpose of posting required documents and permits. Typical documents and permits include but are not limited to: IWS, Pre-Task Hazards Analysis (PTHA), SOP, Site Specific Safety Plan (SSSP), Safety basis documents, roles and responsibilities, abatement permits, soil disturbance permits, and demolition permits.

6.4.2 Equipment Operations

The following controls SHALL be implemented to reduce risks associated with equipment operation:

a) No LLNL personnel are to operate non-LLNL owned or leased equipment.

b) No subcontractors are to operate LLNL owned or leased equipment.

6.5 General D&D Project Hazards and Controls

In general, hazards potentially encountered within the D&D project boundaries stem from the following sources:

a) D&D work performed out of sequence,

b) Uncharacterized materials removed without proper review,

c) As well as: fire, falling components, active utilities, ergonomics, debris and/or flying objects, littered and/or congested walking and working surfaces, slippery and/or uneven surfaces, sharp edges, pinch points, working near mechanical equipment, spiders, mice, and/or other vermin.

The following controls SHALL be implemented to reduce risks associated with these sources of general D&D project hazards:

a) D&D personnel SHALL work according to the requirements of this SOP.

b) All D&D work will be executed in the general sequence established by the project schedule and SHALL be executed in the detailed sequence described at the tailgate meetings.

c) Employees SHALL take ALL reasonable precautions to protect themselves and fellow employees, AND to ONLY perform tasks that can, with certainty, be accomplished safely.

d) ALL D&D personnel have STOP WORK AUTHORITY AND are responsible for ensuring that operations are stopped/ceased once unsafe conditions are observed.

6.6 Stop Work Safety Controls

D&D uses two (2) methods to stop work when safety issues arise:

6.6.1 Partial Stop Work

Personnel may request a “partial stop work”. A “partial” stop work order SHALL be called when further investigation is required. It could be as simple as two workers working out a solution to a process in a localized area or, it could be more complex which may involve a Subject Matter Expert’s (SME) input or a change in work plans.

When a “partial” stop work order is called, work may proceed when the workers’ concerns are completely addressed and the RI and/or AI has approved the lifting of the stop work order as appropriate. Note: If a subcontractor is involved, refer to the specification requirements and the stop work provisions within.

6.6.2 Whole Stop Work

Personnel may request a "whole stop work". A "whole" stop work SHALL be called when acts, or failures to act, may cause substantial harm or imminent danger to the environment, or to the health and safety of employees or the public.

When a "whole" stop work order has been called, work CANNOT resume unless jointly concurred by the IWS AI and the ES&H Team Leader or their alternates. Note: If a subcontractor is involved, refer to the specification requirements and the stop work provisions within.

When deemed necessary by the AI, a re-start meeting SHALL be conducted by the Project RI and documented in the IWS. However, Re-start meetings are required under the following conditions:

- Change in Responsible Individual
- Change in Authorizing Individual
- Change in Scope
- After a "whole" stop work order is initiated

6.7 General Employee Responsibilities

ALL employees are responsible for:

a) Knowing and understanding the ES&H requirements of their assignments and the potential hazards in the work area.

b) Participating in ALL required training, personnel assurance, and health monitoring programs, when required.

c) Performing work assignments in full compliance with applicable ES&H requirements in D&D and Laboratory manuals, guidelines, and established safety plans including:

- Immediately correcting or informing the responsible manager of any ES&H related-problems
- Warning fellow employees of hazards
- Placing defective equipment out of service and notifying Project RI
- Knowing emergency plans and procedures for the work area and
- Reporting ALL work-related injuries and illnesses to D&D management and the HSD.

6.8 Personal Protective Equipment (PPE)

To enter an active D&D area the following minimum PPE is required:

Note: The hard-hat requirement may only be removed with approval from the Industrial Safety Engineer.

- Hard hat
- Safety shoes or stout work boots
- Safety glasses with side shields
- Long pants
- Short sleeve shirt providing full coverage of the torso
- Type II high visibility vests with reflective tape shall be worn when heavy equipment is present at the project site.
- Additional PPE for specific D&D activities as required and identified in the IWS.

6.9 General Health and Safety Controls

a) The two-person rule applies during ALL D&D operations, unless work-alone is authorized by the Project RI.

Prior to the authorization of work-alone operations, the Project RI SHALL evaluate the hazards of each activity that could be classified as "hazardous-for-working-alone". Contact the assigned H&S Technician or designee for assistance in analyzing the hazards and controls for specific types of work. Authorized work-alone staff SHALL maintain radio contact with the work supervisor until completion of the activity. Periodic radio check-in intervals SHALL be established. In keeping with ISM, work alone authorization SHALL be kept to a minimum. Non-hazardous work in office areas is exempt from this requirement.

b) Walkways and work areas SHALL be kept free of debris and non-essential tools.

c) Gloves SHALL be worn to protect hands against pinching, abrasions, and cuts when handling materials or equipment.

d) Fire permits SHALL be obtained when doing work that creates sparks or flames (e.g., some cutting, grinding, welding or torch work).

e) Eating, smoking, drinking, and applying cosmetics is restricted to break areas only (unless an exemption is granted by the SOP RI and ES&H Deputy Team Leader).

f) During the initial phases of facility deactivation/demolition, ALL safety systems (i.e., evacuation page) SHALL be identified and labeled. This is done to ensure these systems remain on-line and are not removed until the determination is made to do so. For more information, refer to Section 7.19, *Fire Safety and Fire Department Access*.

g) The ES&H Industrial Hygienist (IH) SHALL conduct a site walk through/inspection for existing biohazards and pest control issues at the beginning of each job and periodically throughout the job. The potential exposure of workers to spiders, mice, or other vermin SHALL be addressed by utilizing pest control as warranted by site conditions. The presence of animal droppings, such as pigeon droppings or mice droppings at a job site introduces the potential hazard of Hanta Virus Pulmonary Syndrome and other serious diseases. If animal droppings are identified as a hazard during the biohazard/pest control walk through, the IH SHALL generate any necessary Hazards Assessment and Control

(HAC) documents or procedures to ensure the proper clean-up and disposal of the animal droppings.

h) If abandoned sharps are discovered during the course of work, ensure they are placed in a sharps disposal container and disposed of according to the instructions of the Environmental Analyst (EA) and other ES&H disciplines, as appropriate.

i) Before buildings are peeled, (e.g., non load bearing walls demolished, case work removed, tile removed, etc.) line location SHALL be employed and completed. The perimeter of the entire work site SHALL be scanned to locate all underground utilities that may be adjacent, pass through or exit the work site. The marked locator lines SHALL be maintained as the building is being peeled to insure all buried utility line locations remain clearly identified throughout the D&D process. In the event the locator line is removed, the line must be reapplied until the hazard is abated.

6.10 Color Coding

One of the most important communication tools employed on D&D projects is the marking of utilities and hazards within the project boundary. Two color code systems are used. The first is the national standard underground utility identification color code. It is used to identify the type of utility (electric, water, gas, etc.) that is below grade. This system stops at grade level, usually at the first projection above grade. It is used to mark the location of utilities prior to excavation. Underground service locators apply the color code to the ground surface along the route that the utility takes within the project boundary.

The second color code system is unique to D&D and is used to communicate two types of information: the presence of hazards (either confirmed or suspected) and the authorized disposition path (unrestricted release or released to landfill only). The D&D system applies only to above grade Structures, Sub-systems, and Components (SSC). The D&D team waste release protocols are presented in Attachment F.

6.10.1 National Standard Underground Utility Identification Color Code

The following is the national standard color code system for marking underground utilities within the D&D project boundary and within 25 feet of proposed excavations outside of the project boundary. With the exception of white, these markings are applied by the underground service locator provider. The Project RI is responsible for ensuring the application of white paint to mark the project excavation area.

National Standard Underground Utility Color Code System			
RED	Electrical	YELLOW	Gas-Oil-Steam
ORANGE	Communication CATV	BLUE	Water
GREEN	Sewer	PURPLE	Reclaimed Water
PINK	Temp. Survey Markings	WHITE	Proposed Excavation

6.10.2 D&D Above Grade Color Coding

CAUTION:
Both the D&D and Underground Utilities codes use the colors RED, GREEN, BLUE and YELLOW. • The D&D colors are applied to above ground Structures, Sub-Systems, and Components (SSCs). • The Underground Utilities colors are applied only to structures and excavation surfaces. • Use of the National Standard color-coding inside a facility must be annotated in black to distinguish between the D&D color code and the National color code. • The Project RI or designee SHALL inform the D&D workforce of the specific meanings of such color-coded markings to preclude any misunderstandings.

Note 1: Disposal of used spray cans SHALL comply with the Bay Area Air Quality Management District (BAAQMD) or the San Joaquin Valley United Air Pollution Central District (SJVUAPCD) requirements, as appropriate. Contact the project Radiological and Hazardous Waste Management (RHWM) technician for disposal instructions.

Note 2: Upon receiving the analytical results, the H&S Technician shall:

1. *Log and file the results with applicable property release forms in the project binder; and*
2. *Notify the RI.*

The RI shall:

1. *Obtain written guidance from the EA regarding waste release instructions (i.e., ok for reuse/recycle or landfill only).*
2. *Brief the Craft Superintendent and workers on the proper color code to apply (blue or green) after they remove the physical hazards.*

D&D utilizes a color code to identify the status of SSCs slated for removal in D&D activities. Prior to commencing D&D activities, the RI SHALL assemble a multi-disciplinary team to tour the work area, evaluate and color code ALL SSCs. The D&D color code is as follows:

a) **Red** paint is applied when a known hazardous material exists on or inside a SSC. Where applied, removal of the SSC cannot occur until the H&S Technician has changed the color to Green or Blue. The appropriate craft personnel may also change the color of the material with permission of the Project RI. Before changing the color code of an SSC painted Red, the H&S Technician or appropriate craft personnel SHALL consult with the Project RI, ES&H Team Disciplines, RHWM Lead, and the EA to verify that ALL safety,

health, environmental, and waste issues are properly incorporated into the removal and disposal plan and SHALL obtain a copy of the waste release memo issued by the EA.

An example of an SSC that may change colors is the electrical system conduit and panels. They are painted **Red** at the beginning of the project while power is still available in the facility. **Black** is used to annotate the electrical status of the component ("**HOT"** means it is energized and "**NOT HOT"** means that the power has been verified to be isolated AND air gapped). Once power has been isolated, the conductors removed, analytical data reviewed, and the EA has issued a waste release memorandum, the color can be changed to either **Green** or **Blue**.

b) **Yellow** paint is applied to SSCs denoting a suspected hazardous material requiring confirmatory sampling. Where applied, investigation and sampling are required to ascertain satisfaction of characterization to an acceptably known certainty. Yellow-labeled material can be removed with prior approval from the H&S Technician and RI. The appropriate craft personnel may also change the color of the material with permission of the Project RI. The H&S Technician or appropriate craft personnel SHALL obtain and log the sample results in the project files and obtain a copy of the waste release memo from the EA before authorizing removal of the SSC. If the results are negative for hazardous material, the H&S Technician SHALL change the color from Yellow to **Green** or **Blue** before the SSC is removed. An example of a yellow labeled SSC cleared for removal without a change in color is asbestos-containing materials.

c) **Blue** paint is applied to SSCs indicating the material requires controlled disposal at a Municipal Landfill (non-recyclable). Blue paint SHALL NOT be applied to energized systems. Before painting an SSC Blue the H&S Technician or RI SHALL obtain a copy of the waste release memo from the EA.

d) **Green** paint is applied to SSCs indicating that ALL ES&H issues of concern have been addressed, the material is safe for removal, and that it can be reused or recycled if applicable. Green paint SHALL NOT be applied to energized systems. Before painting an SSC Green the H&S Technician or RI SHALL obtain a copy of the waste release memo from the EA.

e) **Black** paint is applied to SSCs for marking identification purposes (i.e., editorials and instructions).

The Project RI SHALL obtain a written variance from the SOP RI if deviation from the color code system is necessary.

6.11 Staging Area

Equipment and debris removed during D&D activities may require temporary staging in a controlled designated holding area pending characterization to determine its release status. Such an area SHALL be referred to as a "Staging Area".

A Staging Area SHALL be established and controlled under the following requirements:

a) The D&D Project RI SHALL discuss the need and the proposed location for the Staging Area with the ES&H Team to identify concerns, requirements, and site-specific controls,

b) The Project RI SHALL assign an operator to each staging area,

c) The operator is responsible for overseeing day-to-day operations and activities performed at the Staging Area. This responsibility includes:

- Receiving equipment and debris from project area
- Maintaining an inventory of materials and equipment stored in the Staging Area
- Coordinating the sampling of equipment and materials, as necessary
- Obtaining prior review from the AI prior to performing dismantlement work in the Staging Area
- Preparing equipment and materials for transportation to the Waste Accumulations Area (WAA), the municipal landfill, Donation Utilization and Sales (DUS), or elsewhere as per the ES&H Team's guidelines
- Maintaining documentation associated with the Staging Area operations and activities

d) The operator SHALL post an Authorized Access List at the Staging Area;

e) The Staging Area SHALL **NOT** be used for the storage of known contaminated materials. If known contaminated material requires disassembly in order to characterize the waste, the disassembled components are to remain in the vicinity of its original location and SHALL be labeled as "Characterization Pending" until characterization is complete and it can be moved to the appropriate holding area;

f) If characterization determines that an item in the Staging Area is to be controlled as hazardous or radioactive waste to be disposed through RHWM, that item SHALL be transferred to the project WAA by the end of the working day;

g) ALL liquids SHALL have secondary containment AND

h) Upon completion of the project, the Staging Area SHALL be closed according to ES&H Team recommendations.

6.12 Hazardous Materials

There is a potential for employees to be exposed to hazardous materials via injection, absorption, inhalation, or ingestion while performing D&D operations.

Workers may be exposed to toxic dusts generated by D&D activities. Dusts generated may contain toxic components (e.g., asbestos, lead, beryllium, chromium, and crystalline silica). Exposures to toxic dust may result in serious illness.

Workers may be exposed to numerous toxic metals (lead, cadmium, mercury, chromium, nickel, beryllium, etc.), which may be suspect human carcinogens and are generally toxic to the lungs and kidneys.

The following controls SHALL be implemented to reduce risks associated with hazardous materials:

a) Activities involving hazardous and/or toxic materials may require exposure monitoring. Monitoring SHALL be determined on a job-specific basis in consultation with the ES&H Team IH.

b) Workers SHALL thoroughly wash their hands, arms, and faces upon exiting the work area.

c) Eating, drinking, smoking, chewing (gum or tobacco), or applying lip balm or cosmetics are not allowed in the work area if hazardous materials are known or suspected to be present.

d) Job-specific PPE SHALL be listed in the IWS or attached safety documentation.

e) Equipment, piping, and utility disassembly introduce the possibility of a spill of potentially contaminated solids and liquids. When there is the possibility of spillage, double containment SHALL be used. The appropriate spill kit or spill cleaning supplies for the potential contaminant SHALL be maintained nearby. An example of double containment is a photo tray on top of a larger sheet of plastic. Collected solids and/or liquids should be appropriately containerized and subsequently managed by the RHWM Technician unless otherwise arranged with the EA.

f) Hazardous material issues SHALL be resolved prior to the facility being demolished.

g) If contract labor personnel are to be involved in handling potentially hazardous (or radioactive) material, proposed operations, hazards, and controls must be reviewed by the contract company's health and safety support as part of the subcontractor's Site Specific Safety Plan (if required). The ES&H Team prior to the subcontractor starting work SHALL review the SSSP. If discrepancies exist, issues of concern must be addressed before work can begin. A pre-start meeting SHALL be held with the subcontractor to cover hazards and controls as well as site access.

6.13 Respiratory Protection

The need for respiratory protection SHALL be determined by the ES&H Team IH, and documented in an approved Hazards Assessment and Controls (HAC) form. Respiratory protection may be used for comfort if requested by an employee. However, the following conditions apply whenever respirators are used:

a) An approved HAC SHALL be in place for the task being performed.

b) If one member of the team wears a respirator then all members of the team working in the immediate area SHALL wear a respirator.

c) A Respirator SHALL be worn any time concrete or asphalt is disturbed unless the ES&H Team IH provides written exception to the Project RI who concurs with the determination.

d) Respirators SHALL be thoroughly cleaned by the user, inside and out, before being placed into respirator storage bags.

e) Respirators SHALL be stored in a cool, dry location when not in use.

f) Respirators SHALL be exchanged at intervals determined by the ES&H Team IH, unless contamination occurs or excessive breathing resistance/flow rate drop is noted.

g) Respirators SHALL be monitored or decontaminated and surveyed by the H&S Technician prior to their return to Respirator Services.

h) The H&S Technician SHALL be notified of any respirator contamination. Contaminated respirators SHALL be segregated and evaluated to determine whether they should be disposed of as waste or decontaminated.

i) If powered air-purifying respirators are used they SHALL be tested for adequate airflow before each usage, by the user or by the H&S Technician. Adequate airflow maintains positive pressure in the face piece while worn.

7.0 HAZARDS ANALYSIS AND CONTROLS

Hazards and controls applicable to most, if not all, D&D projects are described in the sections below. Project-specific hazards and controls not covered here SHALL be addressed on a case-by-case basis in the IWS.

It is the intent of this section to provide a brief overview of the hazards typically encountered on D&D projects and the IWS controls used to mitigate the hazards. If a conflict arises between the controls listed in the IWS and this SOP then a stop work SHALL be issued for those areas affected by the conflicting information until the Project RI, AI, and ES& H Team disciplines can resolve the conflict. The Project RI SHALL document the stop work in the IWS log and SHALL process a Lesson Learned.

7.1 Asbestos-Containing Materials

Asbestos-containing materials (ACM) and presumed asbestos-containing materials (PACM) may be present in facilities/trailers that are to be decontaminated, demolished, or excessed. Asbestos fibers may be released during ACM or PACM removal activities, during other work that may disturb ACM or PACM, or doing work in areas where ACM or PACM has deteriorated or been damaged. The primary exposure pathway is inhalation of airborne asbestos fibers that may cause asbestosis and/or increased risk of developing lung cancer or Mesothelioma. Intact ACM is not a health hazard unless it is deteriorated or disturbed to the extent of making it friable (causing loose fibers to become airborne).

The following controls SHALL be implemented to reduce risks associated with asbestos-containing materials:

a) The ES&H Team IH SHALL work with the Project RI to determine the status of ALL ACM and PACM in ALL facilities/trailers to be decontaminated or demolished. The investigation SHALL employ techniques to ensure that all layers of material have been exposed for sampling (e.g., multiple finish and sub floor layers may exist).

b) Representative bulk sampling of ALL ACM and PACM, including floor material, wallboard, surfacing material, roofing material, and thermal insulation, SHALL have been or SHALL be taken to ensure the facility has been characterized.

c) ALL ACM SHALL be identified, labeled, and spray painted yellow OR the facility SHALL be declared "asbestos free," if no asbestos is present.

d) ALL damaged ACM and PACM that has become friable, become a health hazard or can become airborne SHALL be immediately identified, labeled AND isolated. This ACM/PACM SHALL then be repaired, abated or put into a state that is no longer a hazard to D&D workers.

e) ALL operations pertaining to ACM or PACM must be performed in accordance with existing OSHA regulations and Document 14.9, "Safe Handling of Asbestos-Containing Materials during Construction Work" of the *ES&H Manual.*

f) A work permit SHALL be obtained for all ACM or PACM abatement work.

g) In addition to the PPE described in Section 6.8, the minimum additional PPE for ACM or PACM abatement on D&D projects SHALL consist of Anti-contamination clothing (cover alls, booties, gloves, and hood) and respiratory protection.

7.2 Lead-Containing Materials

Lead-based paint and other lead-containing materials (e.g., lead shielding, lead bricks, galvanized metal, etc.) may be present in facilities/trailers that are to be decontaminated, demolished, or excessed. Airborne lead and lead-containing dust may be released during activities such as lead abatement, demolition, cutting, sawing, scraping, abrasive blasting, and sanding painted surfaces. The primary exposure pathways are inhalation and ingestion.

The following controls SHALL be implemented to reduce risks associated with lead-containing materials:

a) The ES&H Team IH SHALL work with the Project RI to determine the status of ALL potential lead-based paint and other lead-containing materials in ALL facilities/trailers that are scheduled for decontaminated or demolition.

b) ALL lead-based paint and other lead-containing materials SHALL be identified. Representative bulk sampling of ALL potential lead-containing materials, including paint, roof flashing, soundproofing, shielding, and plumbing fixtures, SHALL be taken to ensure the facility is fully characterized.

c) A facility/trailer SHALL be declared "lead free," if no lead-based paint or other lead-containing materials are present.

d) ALL operations pertaining to lead-based paint and other lead-containing materials must be performed in accordance with existing OSHA regulations and Document 14.10, "Safe Handling of Lead and Lead Compounds in General Industry and Construction Operations" of the LLNL *ES&H Manual*.

e) A work permit SHALL be obtained for all ACM or PACM abatement work.

7.3 Mercury

Mercury may be present in facilities that are to be decontaminated, demolished or excessed. The primary hazards from metallic mercury arise from inhalation of mercury vapors and skin contact where mercury can pass through the skin. Mercury targets the respiratory system, central nervous system and kidneys. The maximum 8-Hour Time Weighted Average (TWA) airborne mercury vapor exposure allowed (without respiratory protection) is 0.025 mg/m^3. The peak airborne mercury vapor exposure concentration allowed (without respiratory protection) is 0.1 mg/m^3. Overexposure to mercury vapor can yield symptoms ranging from coughing to chest pain and despondency. A secondary hazard from metallic mercury originates from ingestion. Ingestion of significant amount of mercury can result in symptoms ranging from nausea and abdominal pain to vomiting and diarrhea.

The following controls SHALL be implemented to reduce risks associated with mercury hazards:

a) Avoid skin and eye contact. Use plastic or rubber gloves when handling small quantities of metallic mercury. If exposure to the face may occur, wear splash-proof goggles and a face shield unless full-face respiratory protection is being used.

b) Wash hands and face after handling mercury, before lunch or breaks, and at the end of the workday.

c) The H&S Technician SHALL be notified if any mercury is visually detected.

d) The H&S Technician SHALL monitor for mercury vapors whenever the potential for personnel exposure has been identified.

e) When working on piping systems suspected of containing mercury, contact the ES&H Team IH for task-specific instructions. The following precautions are recommended:

- Whenever possible, place a catch basin made of smooth impervious materials (such as plastic or smooth-finish paint), large enough to contain the greatest amount of mercury that could spill and have sufficient dimensions to catch mercury droplets escaping from any plausible direction.
- Felt mats or horsehair mats can be put on seamless plastic sheets laid in catch pans to catch the droplets from mercury spills. The droplets can then be collected by simply wrapping up the plastic with the mat still inside and disposing of it as mercury waste.
- Pre-stage the mercury High Efficiency Particulate Air (HEPA) filtered vacuum cleaner and mercury spill kit for quick deployment to the pipe separation area.
- Avoid heating pipes that may contain mercury. If torch cutting or similar operations are required, contact the ES&H Team IH for a task-specific hazard analysis prior to beginning work.
- Avoid walking on or touching surfaces contaminated with mercury.
- If a mercury spill can not be cleaned up immediately, establish an exclusion area and post it with CAUTION signs stating, “Mercury Spill Area-Keep Out.”

7.4 Mold

Workers may be exposed to various molds and fungi during D&D activities. Molds can be found almost anywhere, growing on virtually any organic substance as long as moisture and oxygen are present. It is impossible to eliminate ALL molds and mold spores indoors. However, controlling moisture indoors can control mold growth. ALL molds have the potential to cause health effects. Some produce allergens that can trigger allergic reactions, others can produce potent toxins and irritants.

The following controls SHALL be implemented to reduce risks associated with mold exposure:

Do not touch mold/moldy items with bare hands.

a) Do not get mold or spores in eyes.

b) Do not disturb mold growth.

c) Use wet vacuum to collect standing water.

d) Contact the ES&H Team IH for specific recommendations on remediation and control. ALL remediation SHALL be performed under the guidance of a HAC. At a minimum, Nitrile gloves, safety glasses, and a half face air purifying respirator with P100 cartridges SHALL be worn during mold clean-up activities.

e) Wet porous materials SHALL be discarded, regardless if mold growth is visible.

f) Establish an exclusion area and post it with CAUTION signs stating, "Mold In Area-Keep Out."

7.5 Radioactive Materials

Facilities and equipment that were used for operations involving radioactive materials may contain radioactive contamination. Alpha, beta, and gamma emitting radioactive materials may be inside, behind, and/or under casework, within hood remnants and HVAC ducting, under paint and tile, and on other surfaces not previously accessed during earlier building surveys. There is the potential for workers to come in direct contact with contamination or cause the contamination to become airborne. The primary exposure pathways are inhalation, ingestion, absorption, and injection through the skin.

The following controls SHALL be implemented to reduce risks associated with radioactive material hazards:

a) The contamination history and most recent surveys of the facility and/or equipment SHALL be reviewed by the ES&H Team Health Physicist (HP) to aid in creating health physics monitoring and control plans that implement the requirements of 10 CFR 835 and the LLNL *ES&H Manual*.

b) Monitoring and control plans (i.e., hazard assessments or controls delineated in an IWS) SHALL include specifications for the following:

- Characterization surveys when sufficient contamination information and/or facility closeout surveys are not available. Such surveys should typically be conducted prior to the commencement of facility D&D activities;
- Surveys of building and equipment surfaces that become exposed during the removal of Real Property and Installed Equipment (RPIE), casework, floor tiles, etc;
- Personnel and area monitoring and controls for D&D activities that may encounter radioactive materials or contamination and
- Equipment and material survey and release plan (e.g., Sampling Plan), prepared in conjunction with the ES&H Team EA.

c) Monitoring and procedural controls SHALL ensure ALL doses to personnel are kept within established guidelines and maintained as low as reasonably achievable (ALARA).

d) Personnel accessing the D&D projects SHALL adhere to ALL radiation postings.

e) ALL Radiological Areas, as stated in Document 20.2, "LLNL Radiological Safety Program for Radioactive Materials" of the *ES&H Manual*, SHALL be kept under the control of the D&D Project H&S Technician or kept locked to prevent unauthorized access.

f) Items surveyed and found to be radiologically contaminated above 10 CFR 835 Appendix D values SHALL be labeled as described in Document 20.2, "LLNL Radiological Safety Program for Radioactive Materials" of the *ES&H Manual*.

g) Areas (such as portions of walls, casework, floors) surveyed and found to be radiologically contaminated above 10 CFR 835 Appendix D values SHALL be clearly marked by the D&D Project H&S Technician and annotated with the level of contamination and if it is fixed or removable.

h) The D&D Project H&S Technician SHALL be informed of tours through Radiological Areas involving non-D&D personnel.

i) With the exception of Class I and Class II sealed sources, the D&D Project H&S Technician SHALL be informed of any plans to bring radioactive material or radiation generating devices into D&D project sites.

7.5.1 External Dosimetry Requirements

a) Personnel working with radioactive material or performing radiological decontamination activities SHALL be on a quarterly (minimum) whole body Thermo Luminescent Dosimeter (TLD) exchange cycle.

b) Extremity TLD and additional dosimetry requirements SHALL be evaluated and implemented on a case-by-case basis by the assigned HP.

7.5.2 Internal Dosimetry Requirements

a) Prior to work with or around radioactive materials, contaminated equipment or areas, or potentially contaminated equipment or areas, the ES&H Team HP SHALL assess and

advise the Project RI on the need to submit baseline urine samples and have a lung and whole body scan. If these activities are necessary the ES&H Team HP SHALL ensure that they are identified as controls in the IWS.

b) Personnel routinely handling radioactive material or contaminated items SHALL be on a quarterly (minimum) urine bioassay cycle and an annual whole body/lung count.

c) Upon termination of D&D operations specified in 7.5.2 (a); a termination bioassay and whole body/lung count is required.

d) Additional bioassay requirements SHALL be evaluated and implemented on a case-by-case basis by the assigned HP.

7.5.3 Radiological Practices

Good radiological techniques SHALL be practiced to avoid the potential spread of contamination and maintain radiation exposures ALARA. These techniques include, but are not limited to:

a) Frequent use of contamination detection instrumentation to check hands, tools, or areas during and after work with contaminated or potentially contaminated equipment.

b) Being aware of contact radiation levels of the materials that are being handled or worked around by using radiation detection instrumentation available in the area, and taking appropriate steps to reduce personal radiation exposure (limit time, increase distance, use approved shielding).

c) Changing or removing of contaminated gloves before touching or handling uncontaminated equipment, tools, radios, etc.

d) Operations that produce airborne radioactive material (i.e., brushing, grinding, sweeping, etc.) SHALL be avoided if possible and practical. If such operations are required, they SHALL be performed with local High Efficiency Particulate Air (HEPA) negative air exhaust or airborne suppression techniques.

e) Contaminated or potentially contaminated equipment, tools, or materials SHALL be marked or labeled as contaminated (or potentially contaminated, as appropriate) and stored separately from non-contaminated tools.

f) Minimizing the amount of material or equipment brought into a potentially contaminated area.

g) Ensuring that potentially contaminated material/equipment to be released for unrestricted use is surveyed and the results documented by trained and qualified individuals.

h) The use of secondary containment during activities where radiological contaminated dispersible materials or liquids may be encountered or produced, such as the dismantlement of suspected contaminated equipment. An example of double containment is a photo tray on top of a larger sheet of plastic.

i) Whenever radiological contaminated liquids are anticipated or encountered, a spill kit SHALL be in the immediate vicinity of the activity. The contents of the spill kit SHALL

include a sufficient number of absorbents, as determined by the ES&H Team H&S Technician based on the potential amount of liquid that could be spilled.

j) Additional contamination and exposure control procedures will be specified in the job-specific monitoring and control plans as detailed above.

When radiological airborne monitoring is deemed necessary by the ES&H Team Health Physicist and/or EA, analytical results SHALL be forwarded to the Terrestrial and Atmospheric Monitoring and Modeling (TAMM) group, per the EA's discretion. TAMM personnel SHALL evaluate the emissions data to ensure D&D compliance with NESHAPs requirements.

7.6 Beryllium

Controlling beryllium exposure has been a major interest of the DOE for many years. Beryllium and beryllium compounds should be considered potentially harmful. Beryllium and its compounds are classified as human carcinogens. The ultimate goal is to eliminate chronic beryllium disease from all DOE facilities by: controlling exposures; minimizing the number of workers exposed; and minimizing the opportunities for exposure. All beryllium work shall be controlled to minimize the opportunities for exposure to beryllium and the number of workers exposed. Controls, in the order of priority are: engineering controls, administrative controls, and PPE.

All work activities involving beryllium shall be authorized with an IWS or IWS with a Safety Plan (SP) or other work authorization document. The hazard assessment that is performed as part of the IWS process shall determine the controls necessary to keep airborne exposure below the Action Limit (AL) and as low as possible. A stop work SHALL be called if airborne levels exceed 50% of the AL (Refer to Table 1). The purpose of the work stoppage is to determine if procedures and practices can be modified to reduce airborne levels and, if necessary, to put in place an Exposure Reduction and Mitigation Plan. ES&H Manual Document 14.4 "Working Safely with Beryllium" is to be adhered to by all D&D projects.

Table 1. Standards and Limits for Occupational Exposure to Airborne Beryllium

Standard	Limit	Source
Action level (AL)	0.2 μg Be/m^3 time-weighted average concentration[a]	10 CFR 850.23
Permissible exposure limit (PEL)	2 μg Be/m^3 time-weighted average concentration[a]	10 CFR 850.22 29 CFR 1910.1000
Acceptable ceiling concentration	5 μg Be/m^3 [b]	29 CFR 1910.1000
Peak above acceptable ceiling	25 μg Be/m^3 for 30 minutes[b]	29 CFR 1910.1000

[a] **Measured without regard to the use of respiratory protection.**

[b] **For soluble compounds not subject to 10 CFR 850.**

7.7 Noise

Operators and support personnel may be exposed to high noise levels during D&D operations. Exposure to high noise levels may result in permanent noise-induced hearing loss.

The following controls SHALL be implemented to reduce risks associated with noise hazards:

a) Personnel in areas exposed to noise levels in excess of the American Conference of Governmental Industrial Hygienists (ACGIH) Time Weighted Average (TWA) Threshold Limit Value (TLV), 85 decibel (dBA), SHALL be enrolled in a Hearing Conservation Program and receive appropriate training.

b) Hearing Protective Devices (HPDs) SHALL be worn as applicable where noise exposure may be in excess of the ACGIH TLV.

c) The ES&H Team SHALL make arrangements to conduct site and equipment specific noise evaluations prior to the start-up of each operation, as applicable. If exposure levels are in excess of the ACGIH TLV, engineering noise control measures SHALL be evaluated for feasibility. If engineering noise control measures are NOT feasible, restrictions on allowable operating (exposure) times or HPDs SHALL be implemented. Necessary engineering noise control measures and hearing conservation controls SHALL be added to documentation.

d) Hearing Protective Devices (HPDs).

- HPDs SHALL be used in strict accordance with the manufacturer's instructions and SHALL NOT be modified.
- HPDs SHALL be stored in a clean and dry location when not in use.

  Reusable HPDs SHALL be inspected before each use. Damaged or defective HPDs SHALL be replaced immediately.
- Reusable HPDs such as circumaural muffs SHALL be thoroughly cleaned, inside and out, before storage. HPDs SHALL be disinfected before use by another wearer.

7.8 Nuisance Odors, Dust, and Noise

There is a chance for nuisance odors, dusts, or noise to affect both D&D Project personnel and non-project personnel in the surrounding area. Nuisance odors, dusts, or noise are defined as those that are of levels below regulatory guidelines or permissible limits yet cause discomfort for, or interfere with, the worker's tasks.

The following controls SHALL be implemented to reduce risks associated with nuisance odor, dust and noise:

a) When discomfort is encountered due to nuisance odor, dust, and/or noise, contact the H&S Technician for immediate assistance. The H&S Technician SHALL investigate the problem and will either correct it or call the ES&H Team IH, as necessary.

b) Water spray SHALL be used to control dust during demolition activities. Water SHALL be applied in a manner that prevents the runoff of dust control water into the storm

drainage system. Additional dust reducing practices, such as stabilized entrances to the D&D project, control of ingress and egress points and road cleaning SHALL also be employed, where necessary, to mitigate dust nuisances.

7.9 Confined Spaces

Operations may take place in a confined space as defined in Document 18.7, "Working in Confined Spaces" of the *ES&H Manual.* Personnel may be exposed to oxygen-deficient and/or contaminated atmospheres. Work in these atmospheres may cause serious injury or death.

The following controls SHALL be implemented to reduce risks associated with confined space hazards:

a) Work in a confined space SHALL be in accordance with the controls found in Document 18.7, "Working in Confined Spaces" of the *ES&H Manual*.

b) Notify the H&S Technician prior to confined space entry.

c) An excavation of any depth can become a confined space. Contact the H&S Technician prior to entry.

7.10 Material Handling

Material handling accidents can result in serious or fatal injury. A common injury in materials handling involves the back. Back injuries often result from lifting too heavy a load, or by using an unsafe lifting method. Materials can be dropped from elevation, tipped over, or slip, striking personnel and causing injury.

The following controls SHALL be implemented to reduce risks associated with material handling hazards:

a) Material handling aids (e.g., casters or ramps) should be utilized whenever material or container weight exceeds 50 lbs.

b) Personnel SHALL not push or pull a load that exceeds 600 lbs.

c) Personnel utilizing lifting equipment SHALL be properly trained. The use of material handling equipment for disassembly or movement of equipment may require a work plan that SHALL be reviewed by the Industrial Safety Engineer (ISE).

7.11 Rigging, Hoisting, and Lifting Operations

LLNL employees using crane or hoisting equipment on D&D projects SHALL possess a current appropriate LLNL operator's license or be otherwise qualified according to industry standards.

The Project RI SHALL ensure all elements of the LLNL ES&H manual, Document 15.3 *Crane, Hoist, and Rigging Safety* are addressed during the planning stages of each project, and the controls are implemented during project execution. A qualified Rigging expert shall be part of the integrated project team from planning through execution.

D&D Project RIs SHALL not act in the capacity of the Qualified Rigging expert on projects where they are the RI, or Alternate RI.

The Project RI SHALL ensure all subcontractor personnel (excluding supplemental-labor and labor-only workers) operating or hoisting or rigging equipment on D&D projects are prior reviewed and approved by LLNL SMEs. The Project RI SHALL ensure that a record of the review is documented and forwarded to the contract administrator for inclusion in the official contract record.

7.12 Power-Driven Tools and Equipment

Serious injury may result from incorrect usage of industrial power-driven tools and equipment. If improperly maintained or operated, these tools can be a source of injury to personnel. Use of power-driven tools can expose personnel to the hazards of flying objects, sharp edges, pinch points, etc.

The following controls SHALL be implemented to reduce risks associated with power-driven tools and equipment:

a) The operator SHALL be trained prior to operation of industrial equipment. This training SHALL include job-specific training on the use, potential hazards, and required controls to ensure safe operation of the equipment.

b) A pre-operational check and a start-up check SHALL be completed by the equipment operator prior to equipment use. It is recommended that a post-operational check be completed as appropriate, in order to maintain the equipment in a mechanically sound condition in advance of the next operation. Checklists SHALL be developed and maintained current for the equipment and operations by the Equipment RI or designee.

c) Equipment requiring pressure exceeding 150 psi SHALL be evaluated prior to use by a High-Pressure inspector. The Project RI SHALL contact the High Pressure inspector for this evaluation.

d) Protective clothing and equipment, as identified in the IWS SHALL be worn to protect the worker. Changes to the specified PPE require advanced authorization by the appropriate ES&H Team discipline(s).

7.13 Trips/Falls/Working at Heights

Trip/fall hazards can be created by hoses, electrical cords and other items. In addition, wet surfaces or plastic laid down on floors can create slip hazards. When working at heights, there is a potential for injury due to falls.

The following controls SHALL be implemented to reduce risks associated with trips/falls/working at heights:

a) Hoses, electrical cords and other items used SHALL be laid out in a manner reducing the potential for trip/fall injuries. ALL hoses and electrical cords SHALL be protected against damage, i.e., being driven over by motor vehicles.

Hoses and electrical cords that are placed across egress or walking paths SHALL be clearly marked and placed in temporary cable runs.

b) Herculite sheeting or equivalent SHALL be used to cover the floor. Plastic sheeting is NOT approved for use when covering the floor.

c) Spills SHALL be cleaned-up by a qualified person as soon as they are identified.

d) Appropriate fall protection equipment SHALL be employed whenever working at heights greater than 6 feet or within 50 feet of an unguarded ledge (with a fall potential greater than 6 feet). Handrails SHALL be installed on the roof edge wherever practical when disassembly and demolition of roof equipment is required. The ES&H Team Industrial Safety Engineer SHALL evaluate fall protection requirements on a case-by-case basis and establish controls.

e) A work surface, that can be adjusted vertically (e.g., scaffolding and personnel lifts) SHALL be available to allow work from the waist to shoulder height. Work performed on ladders SHALL be limited to those areas where personnel lifts or scaffolding cannot be used.

f) Demolition and disassembly of equipment on the roof or intermediate floors can create holes. Any holes equal to or greater than 2 inches in the least dimension SHALL be covered, with the cover secured in place and the word "HOLE" clearly written on the cover. The material used to cover the hole shall be capable of supporting at least twice the weight of employees, material, and equipment that may be imposed on the cover at any one time (reference OSHA 1926.502(i)).

7.14 Heat Stress

Working in anti-contamination clothing and/or hot weather can give rise to significant heat stress in workers, resulting in various heat-related disorders, including: fatigue, heat exhaustion, heat cramps, heat rash, and heat stroke.

The following controls SHALL be implemented to reduce risks associated with *heat stress hazards:*

a) The ES&H Team IH SHALL evaluate heat stress conditions on a case-by-case basis and establish controls in accordance with ACGIH Heat Stress Threshold Limit Values (TLVs).

b) Provisions SHALL be made by the Project RI to provide employees with shade, water, body cooling apparel, adequate breaks, and break areas. Electrolyte replenishment SHALL be done only with guidance from the HSD.

7.15 Electrical

Work with electrical devices can result in accidental contact with electrical components resulting in an electrical shock. Buildings undergoing D&D SHALL be approached as having unknown and/or undocumented sources of electrical power.

Partial electrical shutdowns and deactivations are NOT allowed without prior permission from the Project AI and concurrence of the ES&H Team Leader or designee. Where allowed, an electrical deactivation plan to include circuit Lockout & Tagout (LOTO) and color code changes SHALL be required.

The following controls SHALL be implemented to reduce risks associated with electrical hazards:

a) The electrical infrastructure including ALL subsystems and components SHALL be color coded "RED" at the beginning of the project until isolated, air gapped, and released per Section 6.10.

b) D&D projects, using a graded approach, SHALL prepare electrical deactivation plans to address the direct project area(s) and the surrounding area(s) to ensure ALL sources of power traversing the project have been identified and controlled.

c) For whole building removal projects, a Deactivation Utility Map SHALL be prepared to identify ALL underground utilities adjacent, under, or tangent to the project. The map SHALL extend a minimum distance of 25 feet around the structure and SHALL be fully researched through documentation and compared against underground line location reports until ALL lines are identified.

d) Building deactivation plans SHALL identify underground vaults, transformers feeds and utility manholes in the area.

e) The Project RI SHALL ensure that High Voltage Electricians are fully apprised of project activities AND are available during planning and site walkthroughs. The input of the High Voltage Electricians SHALL be included in the Electrical Deactivation Plan.

f) D&D activities involving electrical hazards SHALL have an electrician assigned in a lead role. Responsibilities for electrical safety associated with the project SHALL be clearly assigned. Electrical activities must comply with LLNL ES&H Manual requirements, the NEC, and Site Specific requirements.

g) Working on energized electrical systems is NOT ALLOWED. If a demonstrated need exists, as determined by the SOP RI, the ES&H manual and Maintenance and Utility Department (MUSD) procedures governing energized electrical work SHALL be followed. Additionally, the Project RI SHALL conduct a mini-pre start with the AI and D&D Leader in attendance.

h) When D&D activities are conducted in de-energized facilities, a temporary power grid SHALL be installed, as necessary, to support the project activities. Installation of the temporary power grid SHALL comply with the LLNL ES&H Manual and National Electric Code (NEC) for temporary power distribution systems. Where utilized, the grid SHALL be inspected and approved by a certified Electrical Authority Having Jurisdiction (AHJ) representative and be maintained by an assigned electrician. When a modification to the power grid is required, use of the system must stop until a certified Electrical AHJ has approved ALL modifications.

i) The Project Electrician SHALL remove ALL wires from each conduit prior to the conduits being removed. ALL conductors, electrical devices, transformers and capacitors

SHALL be tested for voltage/amps (both AC and DC) prior to any work being performed on them. ALL capacitors SHALL be discharged and grounded/bonded to prevent recharging of the capacitors by following the D&D capacitor discharge procedure. Unless prior approval is obtained from the Project AI, conduits SHALL NOT be cut or removed until empty of ALL wire or conductors.

j) Where practical, conduit SHALL be emptied of conductors. If the RI deems it impractical to remove all conductors, a request for variance shall be submitted to the AI for approval. An exception to this is for trailer facilities which generally are constructed using cable that is affixed directly to the structure within interstitial spaces. The requirement to remove all conductors in trailers is impractical and therefore not required.

k) ALL hand held power tools SHALL be double insulated or equipped with grounding pins. ALL portable power equipment SHALL be plugged into ground fault circuit interrupters (GFCI) protected connections (120 VAC). GFCI SHALL be used when electrical devices are used out-of-doors or in wet environments.

l) Power cords, extension cords, etc. SHALL be inspected at the start of each workday to ensure safe condition.

m) ALL electrical equipment used on D&D projects SHALL be listed by a Nationally Recognized Testing Laboratory OR SHALL be inspected by a representative of the LLNL AHJ.

n) Removal of light bulbs and ballasts can occur prior to issuance of the deactivation plans following lock out/tag out procedures and an authorized work document.

7.16 Mechanical

Work with mechanical utilities and devices can result in an inadvertent disruption to fire protection systems, and/or an accidental release of natural gas, sewage, cooling water, or compressed air, etc. Buildings undergoing D&D SHALL be approached as having unknown and/or undocumented sources of mechanical utility supplies and cross connections to other facilities.

Partial mechanical shutdowns and deactivations are NOT allowed without prior permission from the Project AI and concurrence of the ES&H Team Leader. Where allowed, a Mechanical Deactivation Plan to include system LOTO and color code changes SHALL be required.

The following controls SHALL be implemented to reduce risks associated with mechanical hazards:

a) The mechanical infrastructure including ALL subsystems and components SHALL be color coded “red” at the beginning of the project until released per Section 6.10.

b) D&D projects, using a graded approach, SHALL prepare mechanical deactivation plans to address the direct project area(s) and the surrounding area(s) to ensure all mechanical systems traversing the project have been identified and controlled.

c) For whole building removal projects, a Deactivation Utility Map SHALL be prepared to identify ALL underground utilities adjacent, under, or tangent to the project. The map

SHALL extend a minimum distance of 25 feet around the structure and SHALL be fully researched through documentation and compared against underground line location reports until ALL lines are identified.

d) Building deactivation plans SHALL identify underground vaults and utility manholes in the affected area.

e) The Project RI SHALL ensure that mechanical utility and communication coordinators are fully apprised of project activities and are available during planning and site walkthroughs, and that their input is included in the mechanical deactivation plan.

7.17 Heavy Equipment

During D&D activities, heavy equipment SHALL be utilized to remove salvageable equipment (including cranes and rigging, SSCs, and other materials from the work area. This work may require staging of materials and movement of heavy equipment outside of the fenced work area. These placements SHALL be limited to temporary activities and must be evaluated to minimize impact to the neighborhood. Associated hazards included in this portion of the operation include exposure of industrial hazards to non-project members.

A Rigging Expert SHALL be part of the integrated project team from planning through execution if rigging equipment is anticipated to be used on a project.

The following controls SHALL be implemented to reduce risks associated with heavy equipment hazards:

a) ALL mobile cranes/boom trucks SHALL have a copy of their certificate of inspection available for review by the ES&H Team Industrial Safety Engineer.

b) Only qualified operators SHALL perform operations using heavy equipment. Note: Operators in training may operate heavy equipment only if a qualified heavy equipment operator grants approval and oversees the entire operation.

c) The rated lift capacity of the equipment SHALL not be exceeded.

d) The ES&H Team Industrial Safety personnel SHALL work with the Project RI to survey the work site to ensure that any heavy equipment in use on the site does not pose a threat to underground or overhead utilities. Appropriate distances from overhead utilities SHALL be maintained (i.e., 20 feet minimum clearance from unshielded power lines; and 10 feet minimum clearance from shielded power lines).

e) Any temporary mobile crane/boom truck staging areas SHALL be barricaded and posted to make it very clear to passersby that it is a work zone and unauthorized access is not permitted. The crane/boom truck work zone SHALL be delineated such that the actual working radius of the crane/boom truck is within the confines of the zone. The crane SHALL be evaluated to ensure that the fully extended boom does not present a hazard to surrounding facilities if it were to collapse. When heavy equipment is utilized outside of the fenced work area, the expanded work area SHALL be barricaded, to prevent passerby's contact with the working range of the equipment. The equipment operator and/or Project RI will ensure that the appropriate barricades and postings are in place.

f) The ES&H Team Industrial Safety Engineer and Fire Department SHALL review and approve ALL temporary mobile crane/boom truck work zones outside of the already established D&D Project work zone.

g) A mobile crane/boom truck SHALL not suspend a load over any personnel or occupied facilities.

h) No lifts SHALL be made with wind speeds at or above 25 miles per hour.

i) If rigging equipment will operate next to a restricted area (e.g. super block), the RI SHALL prior contact the Program Security Representative to incorporate safeguards and security requirements into project activities.

7.18 Traffic

The D&D Project may affect traffic patterns due to project fence lines and transport of salvage and/or waste materials from the project area.

The following controls SHALL be implemented to reduce risks associated with traffic hazards:

a) Appropriate traffic signage SHALL be placed.

b) Temporary barricades SHALL be installed as appropriate. These barricades SHALL be posted with "WORKERS AND EQUIPMENT WORKING" or similar signs to inform pedestrians that this area is no longer suitable for routine walkthroughs.

c) Appropriate traffic controls SHALL be used to prevent unauthorized traffic.

d) Flaggers SHALL be used to ensure safe movement of equipment/vehicles into and out of project work sites.

e) The Project RI SHALL ensure that the appropriate barricades and postings as listed above are in place prior to project activities.

7.19 Fire Safety and Fire Department Access

Two concerns with D&D Projects are maintenance of Fire Department access and means of egress. Temporary work zones and area blockages SHALL be considerate of Fire Department access to ensure timely emergency response. Additionally, maintenance of a continuous and unobstructed way of exit travel from any point in both the project work zone and surrounding facility areas is essential. This will allow for adequate escape routes for personnel in the event of an emergency situation. An additional concern is accidental breakage of sprinkler lines during decontamination.

The following controls SHALL be implemented to reduce risks associated with fire safety hazards:

a) In the event of an emergency in the D&D Project area, the Fire Department SHALL be called at extension **911** (or **925-447-6880** if calling from a cellular phone). The Fire Department SHALL provide instructions to project workers and other affected personnel as necessary.

b) The fire protection infrastructure including ALL subsystems and components SHALL be color coded "RED" at the beginning of the project until released by the Project RI and FPE.

c) Unless pre-approved by the Project RI, Fire Protection Engineer (FPE), and LLNL Fire Department, fire sprinkler and emergency evacuation systems SHALL remain operational until the day before the structure is demolished. These systems SHALL be clearly identified prior to the removal of utilities in the facility. Any activity that can affect the operation of these systems (e.g., ceiling tile removal), SHALL be approved by the Project RI and the ES&H Team FPE prior to the initiation of work activities.

d) The means of egress SHALL be kept clear and personnel SHALL be informed how to exit the building from any work location within the building. Exit doors that have been locked from the exterior SHALL remain operable from the inside of the building. In an emergency, D&D personnel SHALL meet at their designated assembly point and account for their staff. The Project RI SHALL inform the Fire Department Incident Commander of the status of D&D personnel. If anyone is missing, the Project RI SHALL provide a probable location for that individual.

e) The Project RI SHALL submit a map, denoting the location of temporary fences and gates, to the Fire Chief (or designee) for approval. Once approved and signed, the map may be utilized to establish the temporary fences and gates.

f) Project gates SHALL remain operable by the Fire Department and located to make it easy for the Fire Department to provide emergency service to the building and occupants.

g) All changes to fire lanes and Fire Department access in and around the work area SHALL be jointly reviewed by the Project RI and ES&H FPE and submitted to the Fire Department Duty Chief for approval.

h) The Project RI SHALL contact the Fire Department to schedule all fire alarm and fire extinguishing systems terminations.

i) When performing work that exposes workers to pyrophoric or flammable materials, fire retardant clothing SHALL be worn, and flame resistant materials (e.g., fire retardant plastics and herculite) SHALL be used.

j) The accumulation of trash and combustible material SHALL be removed from the building on a daily basis. Trash dumpsters SHALL be kept at least 10 feet from any building and be emptied when full. At least two pressurized water or other appropriate type fire extinguishers SHALL be available in the demolition area of the building.

k) The Project RI shall review Fire Permits before use to ensure that the controls are clearly defined and understood by the users.

Note: A structure is considered demolished when the roof and ALL walls have been removed. The foundation may still be present.

l) Once demolition of a structure is complete, the Project RI SHALL notify the Fire Department, via email, informing them of the completed demolition.

7.20 Soil, Asphalt and Concrete Penetration

Whenever penetrating soil, asphalt or concrete there is the potential for inadvertent contact with significant hazards (e.g., live electrical conductors, process contaminated pipes, natural gas lines, water lines, and air lines). Such inadvertent contact presents the potential for injury or death to personnel, the disruption of essential services, harm to the environment, and damage to real property.

When asphalt or concrete is disturbed in a manner that creates dust particles there is a respiratory hazard caused by the silica contained in the material. The following controls SHALL be implemented to reduce risks associated with soil, asphalt and concrete structure penetrations:

Respiratory protection SHALL be utilized whenever the method for penetration of concrete or asphalt could result in airborne dust particles.

When performing work activities involving **excavation/penetration in soil, asphalt, or concrete where utilities may be located**, Plant Engineering Maintenance Operations Procedure (MOP) No. MOP-02003, *Soil Excavation (Digging, Grading, Tunneling, Trenching, and/or Drilling) Permit Procedure* SHALL be utilized. The Project RI SHALL review the permit with ALL project team members assigned to the activity prior to project start-up AND ensure the permit(s) are posted and visible at each work site.

- When performing work activities involving **penetration action in concrete floors, slabs, walls and/or ceilings greater than 3 inches in depth in buildings or areas where utilities may be located**, Plant Engineering Maintenance Operations Procedure (MOP) No. MOP-03001, *Concrete Structure (Floor, Wall, and Ceiling) Penetrations Permit Procedure*, SHALL be utilized. The Project RI SHALL review the permit with ALL project team members assigned to the activity prior to project start-up AND ensure the permit(s) are posted and visible at each work site.
- The Project RI SHALL ensure facilities undergoing D&D are scanned prior to initiating any penetration action in concrete floors, slabs, walls, and/or ceilings less than 3 inches in depth in buildings or areas where utilities may be located. The workers SHALL ensure that the proposed work area is investigated for the presence of embedded utilities prior to starting their assigned penetration work. This assurance is evident in the form of utility markings in the area to be disturbed and a valid penetration permit.
- Before buildings are peeled, tile removed, etc. Line Location SHALL be employed and completed. The marked Locator Lines SHALL be maintained as the building is peeled to ensure ALL buried utility line locations are clearly known throughout the D&D process. In the event the Line is removed, the Line must be remarked until the hazard is abated.
- Areas outside of the structure to be surveyed are to be outlined with white paint.
- Prior to excavation work, the Project RI SHALL ensure ALL Soil Excavation Permits (MOP-02003) are reviewed for adequacy by themselves, the ES&H Team ISE and the Permits Coordinator. Prior to employee entry into any excavation area, the ISE SHALL evaluate the excavation for stability, depth, odors, water and other conditions that may require corrective action. Any excavation that is 5 feet deep or greater requires shoring, or protective systems in any type of soil, except solid rock. Shoring, or protective

systems may be required at depths less than 5 feet, as conditions warrant prior to excavation activities.

- ALL excavations, regardless of depth SHALL be inspected daily by an OSHA Competent Person prior to the first entry and after any substantial occurrence (i.e., rain storm). In addition, any excavation 5 feet in depth or greater requires atmospheric testing prior to first entry. Atmospheric testing may also be required at depths less than 5 feet if the activities in the excavation warrant.
- Excavations 6 feet deep or more SHALL be barricaded a distance of 6 feet back from the excavation edge and access restricted to necessary personnel ONLY. Material, equipment, soil and machinery SHALL be kept a minimum of 2 feet back from the edge of any excavation, regardless of depth. Personnel, unless entering, or leaving the excavation site SHALL also remain 2 feet back from the edge. Where employees or equipment are allowed to cross over excavations that are 6 feet deep or more, walkways or bridges SHALL be provided and equipped with standard guardrails. ALL excavations and work in excavations SHALL be under the supervision of an OSHA Competent Person.

7.21 Explosives Contamination

Facilities used for explosive operations to include testing, chemical analysis, synthesis, or other explosive processes may contain explosives residue. This residue, if present, must be identified and removed prior to demolition of the facility.

An Explosives Safety engineer SHALL be part of the integrated project team from planning through execution if the facility has a history of explosives operations.

The following controls SHALL be implemented to reduce risks associated with explosives contamination hazards:

ALL subsystems and components potentially contaminated with explosive materials SHALL be color-coded “RED” at the beginning of the project until ALL issues of concern are resolved to the satisfaction of an ES&H Explosives SME.

The ES&H Team SHALL contact the Explosives Safety Engineer to evaluate facilities used for explosive operations prior to D&D start-up. Any suspected contamination SHALL be either removed or identified for special consideration during the demolition process.

If, during the course of dismantling a facility, material is found that anyone suspects may possibly be an energetic material, immediately STOP work and notify the RI who should contact an Explosives Safety Engineer. The Explosives Safety Engineer SHALL inspect the suspect material and, as necessary, request a chemical analysis to determine if the material is energetic. After the nature of the material is determined, the appropriate steps SHALL be taken to allow the project to continue.

7.22 Sewage

The primary hazard involved in working on sewage pipes and related components is exposure to raw sewage. The potential for exposure to disease is the primary health risk. The potential consequences, if workers are exposed, ranges from very short periods of discomfort to long-term illness.

Other hazards involve exposure of the general population to disease as a result of cross-contamination of contaminated tools and equipment utilized when working on the potable water systems. If pumps, hoses, or other equipment are not properly labeled or cleaned, and are utilized on potable water systems, the general Laboratory population could be exposed to disease.

The following controls SHALL be implemented to reduce risks associated with raw sewage hazards:

a) Personnel working where raw sewage is present SHALL be free of open wounds.

b) Individuals entering sanitary sewers, septic systems, or manholes; modifying sanitary sewers or repairing sanitary sewer systems SHALL wear the appropriate protective clothing as determined by the ES&H Team IH.

c) Protective equipment SHALL include:

- Steel-toed safety shoes.
- Latex-free surgeon's gloves.
- Laboratory issue work coveralls (or equivalent garment).
- Safety glasses with side shields.
- Skin protection (e.g. mid-calf rubber boots, mid-forearm rubber gloves, full-length coveralls).
- Poly-Tyvek coveralls when the potential for contact with raw sewage exists.
- Face shield when the potential for splash-back exists.

d) Personnel SHALL wash their hands with soap and warm water immediately after completion of any work involving raw sewage. Hand to mouth contact SHALL be avoided until hand washing is completed.

e) Poly-Tyvek coveralls SHALL be disposed of as non-hazardous municipal waste unless radioactive or hazardous materials are encountered. In this instance, the ES&H EA SHALL determine appropriate disposal. Boots, gloves and respirators SHALL be cleaned with disinfectant. All wash water for sanitizing equipment SHALL be discharged to the sanitary sewer system.

f) When work is completed, ALL equipment and hand tools used SHALL be completely sanitized by use of domestic water and a commercial disinfectant. Rinseate generated for disinfecting equipment SHALL be collected for proper characterization and disposal.

g) In the event of a spill of sewage, the ES&H EA or Environmental Duty Officer, during off hours, SHALL be contacted to provide guidance on clean up requirements.

h) To prevent cross contamination between the sanitary sewer system and the potable water system, ALL tools, hoses, pumps, and equipment utilized for work on the sanitary sewer system SHALL be sanitized after use. In addition, they SHALL be labeled "Used for Sanitary Sewage Work" and stored in a separate location from similar equipment utilized for potable water system work. Air gaps are the only allowable backflow prevention devices for sanitary sewer systems and SHALL be used when potable water systems are connected in any way to sanitary sewer components.

i) Information and controls found in IWS 11950: Working with Raw Sewage is to be followed for Site 300 work activities.

7.23 Perchlorates

Laboratory ventilation systems and/or piping may be contaminated with perchlorates. Perchlorate residues are shock sensitive, and could explode or initiate a fire if subjected to mechanical shock, excessive heat, electrical discharge or other initiating event during systems disassembly. Non-sparking tools shall be used when perchlorates are potentially present. Perchlorate residues are strongly reactive with organic materials, therefore requiring the use of inorganic tools and equipment for disassembly.

In the event that the controls set forth in this SOP and other required safety documents are not properly implemented, a worst case propagating explosion could potentially release significant amounts of energy, and could severely injure or kill workers in the immediate vicinity.

Perchlorates possess varying, but in general, fairly low toxicity. Skin or eye exposure may cause irritation. Inhalation of high concentrations may cause upper respiratory irritation, metallic taste, digestive disorders, chest pain, or difficulty breathing. Ingestion of perchlorates may cause acute effects such as metallic taste, vomiting, digestive disorders, headache, bluish skin color, kidney damage, paralysis, convulsions, and/or coma.

Perchloric D&D work requires the use of intensive PPE, which may include ballistic body armor, helmets, and face shields. The use of this PPE introduces additional industrial hazards to workers due to narrow fields of vision and heat loading associated with wearing heavy protective clothing.

There are two methods used by D&D to detect the presence of perchlorates: Methlyne Blue and Selective Ion Testing.

Methlyne blue testing is used as an initial characterization for the potential presence of perchlorates. The results of the methlyne blue test can result in a false positive; therefore, the selective ion testing method is used (based on the IH's recommendation) to confirm the results of the methlyne blue test.

Two different levels of perchloric tasks may be encountered during D&D work.

- **Level One:** Known Perchlorates exist within the equipment to be removed. The term "Known" is defined as positive results via ion specific electrode testing or visual perchlorates (salt crystals) are observed.
- **Level Two:** Potential Perchlorates exist from operations history but testing (methlyne blue or ion specific electrode) and visual inspection results prove to be negative. The probability of existing perchlorates is low.

The job specific HAC document will identify the level of the perchloric job as well as the level of PPE required as approved by the ES&H Management Team and the SOP RI.

A tailored SOP shall be developed for a Level 1 or Level 2 perchloric job as well as approved by the ES&H Management Team and the Project RI.

7.23.1 Level One Perchlorate Controls

The following controls will reduce the risk of perchlorate residue hazards for a Level One task:

a) A dismantlement plan is required for each perchloric D&D project. The plan will include a drawing showing the entire mechanical system, inlet to exhaust, and will be used as the basis for determining cut and separation locations, start and end points, and mist injection locations. The plan must be reviewed and approved by the ES&H Management Team and the Project RI.

b) All Level One perchloric D&D projects shall establish two specific access areas for each project:

   1) **Regulated Area:** The regulated area establishes a boundary to keep non-project personnel away from the immediate work area, and is established on risk, quantity, distance, and local field conditions. A decontamination work area will be established within the regulated work area. This area is where water immersion is to be utilized for cleaning perchlorate contaminated ductwork and equipment. Boundaries to the Regulated Area will be established using ropes, tapes and signs.

   2) **Restricted Area:** The restricted area is the immediate location where the work is performed and will include adequate space for initial wash down, tools/ supply staging, and component lay down. The Restricted Work Area shall not be cordoned off due to the potential for the introduction of additional tripping hazards.

c) Under no conditions can tools or equipment be brought into the Regulated Area without prior review and approval of the project IH or RI. Duct dismantlement should be conducted using hand or battery-powered saws. Tools used for maintenance disassembly shall be inorganic, preferably bronze tools. All tools used in the project shall be reviewed prior to beginning work to ensure inorganic materials are utilized.

d) Unauthorized personnel will not be allowed in the Regulated or Restricted work area during operations. If unauthorized persons enter these areas during operations, work will be stopped until unauthorized personnel depart.

e) Only employees wearing ballistic gear and directly involved with the disassembly will be allowed within 75 feet of the contaminated equipment during the disassembly phase. One or more support persons (e.g., H&S Technician) are allowed within the 75-foot radius, wearing the lightweight flak vests, hardhat, regular face shield and foam plug hearing protection inserts. These support personnel may not approach within 75 feet of the ducting when decontamination or removal work is ongoing.

f) D&D team members working in the Regulated Area shall, as a minimum, wear lightweight body armor, slip resistant safety shoes, hard hat/ballistic helmet, face shield and foam plug hearing protection inserts. Team members working in the Restricted Area shall, as a minimum, wear ballistic-rated flack vests, ballistic rated helmets with face shields, slip resistant safety shoes, PVC coated Tyvek (or equivalent) coveralls and mid-weight natural rubber, nitrile, or neoprene gloves.

g) A pre-job walk through involving the Project RI, D&D workers and appropriate ES&H Team members of the project area is a base requirement for perchloric projects. A full dress rehearsal mock up and dry run will be required prior to the start of an activity.

h) Water will be used to dissolve perchlorate salts. Attention must be given to determine if low points in the system are at risk of breaking due to the added weight of water. The work area must be contained to collect rinse water to minimize cross contamination, slip hazards, and water leaks.

i) As systems are disassembled, team members shall continually view the interior of the system, inspecting for crystallized salts or other debris. As pieces are removed, they will be sprayed with water to keep the interior moist, sealed in plastic bags, and set aside for later transport to the decontamination work area for the last phase of the decontamination project.

7.23.2 Level Two Perchlorate Controls

The following controls will reduce the risk of perchlorate residue hazards for a Level Two task:

a. A dismantlement plan is required for each perchloric D&D project. The plan will include a drawing showing the entire mechanical system, inlet to exhaust, and will be used as the basis for determining cut and separation locations, start and end points, and mist injection locations. The plan must be reviewed and approved by the ES&H Management Team and the Project RI.

b. A pre-job walk through involving the Project RI, D&D Team workers and appropriate ES&H Team members of the project area is a base requirement for perchloric projects. On a graded approach, a full dress rehearsal mock up and dry run may also be required prior to the start of an activity.

c. Water flushing will be used to dissolve potential perchlorate salts in inaccessible areas as a precaution if methlyne blue screening is negative on accessible areas. Attention must be given to determine if low points in the system are at risk of breaking due to the added weight of water. The work area must be contained to collect rinse water to minimize cross contamination, slip hazards, and water leaks.

d. Methlyne blue screening and visual inspections must take place as the system is being dismantled specifically in areas that were not accessible during initial screening. If positive methlyne blue results are observed (Purple in color) or visual crystals are identified, STOP work, cordon off and post the immediate area then contact the RI for further assessments.

7.24 Stored Energy

During D&D activities, identifying and controlling ALL sources of energy (e.g. utilities, equipment) is required. Natural gas, high pressure gasses and liquids, sewage, waste lines and electricity are examples of systems that may present stored energy hazards. Additional examples include, any elevated mass that can drop and springs that can suddenly release tension.

The following controls SHALL be implemented to reduce the risk of stored energy hazards:

a) ALL potential stored energy subsystems and components SHALL be identified and color coded "RED" at the beginning of the project until issues of concern are addressed and resolved to the satisfaction of the appropriate ES&H Team Disciplines.

b) Controls found in the ES&H Manual, Document 12.6, *LLNL Lockout/Tagout Program*, Section 1.4, *Administrative Locking and Tagging,* AND Section 1.4.1, *Deactivation and Mothballing,* SHALL be applied to ALL D&D projects.

8.0 ENVIRONMENTAL REGULATORY IMPACTS, NOTIFICATIONS, PERMITS AND CONTROLS

Many environmental impacts require that notifications be made to various responsible environmental regulatory agencies, including but not limited to the Environmental Protection Agency (EPA) and the DOE. Therefore, ALL D&D activities SHALL be evaluated for environmental impacts and potential impacts, prior to project commencement and as early in the planning process as possible. The ES&H Team EA SHALL act as the D&D Environmental single point-of-contact (POC) coordinating environmental concerns with the LLNL Environmental Protection Department (EPD), DOE and other regulatory agencies; as appropriate.

The EA SHALL evaluate project activities for required documents and permits [i.e. National Environmental Policy Act (NEPA), National Historic Preservation Act (NHPA), and Air Quality Notifications. In this capacity the EA is responsible for preparing the documents, ensuring that they are reviewed, approved, and obtained (with copies to the Project RI) prior to commencing project activities. It is important that the EA be kept apprised of project schedules to guarantee ALL necessary documents and permits are submitted and obtained in a timely manner. Therefore the EA SHALL attend weekly project review meetings.

8.1 Sampling Plans

D&D activities require stringent controls to identify, characterize, and sample for hazardous constituents and components. The ES&H Team EA, working closely with the other ES&H Team

Disciplines, SHALL take the lead in preparing Sampling Plans for D&D projects. An example of a one-page sampling plan is included as Attachment G.

a) Sampling Plans SHALL specify type of sample, location, basis for, quantity, analytical procedure(s) required, laboratory turn around times, estimated sampler field time, and cost of samples necessary to adequately and efficiently characterize the SSCs for both worker safety and final waste disposition.

b) When sampling involves characterization of potentially Low Level Radioactive Waste, the ES&H Team EA SHALL submit the Plan for written concurrence to the Radiological Characterization Analyst (RCA) and the Waste Management Liaison that supports D&D. The intent of this concurrence is to ensure that the sampling plan adequately supports the disposal requirements set forth by the waste disposal site chosen for the project.

c) The EA SHALL submit the final, signed Sampling Plan to the Project RI for approval before any sampling is conducted. The Project RI is responsible for ensuring that the sampling plan addresses the entire scope of the project, is consistent with the waste disposal plan (e.g., waste disposal site, waste container types, and waste configuration.), and that there is sufficient budget and schedule in the project baseline for the sampling effort.

d) The Project RI and ES&H Team EA SHALL review the Sampling Plan with the assigned H&S Technician and RHWM technician (s) to ensure it is understood and, for worker safety and environmental protection, proper PPE, for the sampling evolution, is documented.

e) IF changes in project scope and/or activities occur that require Sampling Plan modification, THEN the Change Control SHALL be identified and managed by the ES&H Team EA, Project RI, and other ES&H Team Disciplines, as identified.

8.2 RCRA and/or CERCLA Permitted Facilities

For the D&D of Resource Conservation Recovery Act (RCRA) and/or Comprehensive Environmental Response, Compensation, and Liability Act (CERCLA) permitted facilities, the EA SHALL consult with EPD/Permits and Regulatory Affairs Group (PRAG) to determine RCRA/CERCLA Corrective Action issues, if any. IF Corrective Action issues exist, then EPD/PRAG SHALL act as the Point of Contact (POC) for interactions with The Department of Toxic Substances Control (DTSC) and other regulatory agencies. The PRAG Analyst SHALL be involved with RCRA/CERCLA projects from the beginning planning stages and interact with the Project RI to coordinate and approve Sampling Plans in accordance with RCRA/CERCLA requirements.

8.3 Demolition and Renovation Environmental Controls

The following sections describe the various environmental protection controls that SHALL be followed at a minimum on D&D projects where appropriate. These controls are to be used in conjunction with the ES&H controls discussed in the previous sections.

8.3.1 Demolition Notification

Operations' involving building or structural component demolition requires the notification of the Bay Area Air Quality Management District (BAAQMD) or San Joaquin Valley Unified Air Pollution Control district (SJVUAPCD), as appropriate. Notification SHALL be made at least ten (10) days prior to the commencement of demolition activities.

Three to four weeks prior to commencing structural demolition activities, the ES&H Team EA SHALL coordinate with the Permits and Regulatory Affairs Division (PRAD) Air Analyst to ensure that the submittal of a 10-working-day demolition notification is submitted in support of the project schedule.

The EA shall work closely with the Project RI to monitor the scheduled start and completion dates for the demolition activities and shall ensure that the proper notifications are made if the schedule changes once the notification has been submitted.

The Project RI SHALL not proceed with demolition until a copy of the demolition permit is received from the EA.

Exemption: Notification is not required for the demolition of mobile structures.

Ensure nuisance dust must be kept to a minimum during demolition. Nuisance dust complaints can lead to a Notice of Violation (NOV) from an Air Board.

8.3.2 Asbestos Containing Material Abatement Notification and Controls

Where the amount of Regulatory Asbestos Containing Material (RACM) exceeds BAAQMD and/or SJVUAPCD limits, permits and prior notifications are required and the following controls SHALL be followed:

a) Three to four weeks prior to commencing RACM abatement activities, the ES&H Team EA SHALL coordinate with the PRAD Air Analyst the submittal of a 10-working-day asbestos abatement notification.

- The Asbestos RI SHALL report to the ES&H Team EA the quantity (i.e., square feet or cubic feet), and concentration of asbestos scheduled to be removed during the demolition activity.
- IF abatement activities are performed by LLNL employees, THEN the ES&H Team EA SHALL coordinate with the PRAD Air Analyst to ensure all required paperwork is generated and proper notification(s) are made.
- IF a subcontractor is performing the abatement activities, THEN the ES&H Team EA SHALL coordinate with the assigned subcontractor to ensure paperwork is completed and proper notifications(s) are made. The subcontractor is responsible for submitting the 10-day notification to the appropriate agency.

b) The Project RI SHALL ensure that the required permit is in place and that work starts on the specified date.

c) The EA shall work closely with the Project RI to monitor the scheduled start and completion dates for the ACM Abatement activities and shall ensure that the proper notifications are made if the schedule changes once the notification has been submitted.

d) All friable or non-friable ACM deemed waste that is, or has the potential to become friable SHALL be managed as hazardous waste.

e) ALL ACM SHALL be wetted prior to packaging to prevent dispersion and facilitate handling.

f) ACM SHALL be packaged inside two layers of plastic bags (6-mil thickness each). During packaging activities, ensure the inside bag is properly sealed prior to placement in the outside bag. When packaging is complete, ensure the outside bag is sealed in such a manner as to secure its contents.

8.3.3 Abrasive Blasting

Abrasive blasting of previously painted or metal surfaces may potentially contaminate the environment and expose workers to hazardous effluent.

a) Abrasive blasting and surface preparation must be accomplished with California Air Resources Board-approved grit.

b) The effluent from abrasive blasting SHALL be evaluated by the ES&H Team EA for proper disposal.

c) No abrasive blasting effluent SHALL be discharged to the storm drain.

d) Materials SHALL be managed to prevent discharge to the ground and/or storm drainage system. IF a discharge occurs, the materials SHALL be cleaned up immediately upon completion of the operation, OR if during the rainy season, by the end of each work day.

e) Respiratory protection SHALL be worn when abrasive blasting until written justification for not wearing it is provided by the ES&H IH.

8.3.4 Surface and Ground

To prevent the discharge of hazardous, radioactive, or mixed materials or wastes to the environment, D&D activities having the potential for inadvertent release of secondary waste to the environment (e.g., air, soil, asphalt, surface, or ground water), SHALL be controlled via work locations and the following controls:

a) The Project RI shall ensure that all routes of entry to the environment, including direct discharges to air, soil, surface water, storm sewer, sanitary sewer, wells, and drainage channels are protected.

b) Tools, equipment, and materials utilized for D&D activities SHALL be properly stored by the equipment user to prevent secondary cross-contamination to the environment.

c) Construction equipment and vehicles SHALL be inspected daily by the equipment operators for leaks of fuel, engine coolant, oil, and hydraulic fluid. Any leaks SHALL be

contained, repaired, and reported immediately to the Project RI. The Project RI SHALL notify the ES&H Team EA for cleanup guidance of discharges to the environment.

d) Waste generated from hazardous materials used by the contractor, or its sub-contractors, are the responsibility of the contractor and SHALL be handled in accordance with applicable Federal, State, and local environmental regulations. These wastes may include, but are not limited to: batteries, paints, solvents, oil, and greases as well as empty containers. Temporary storage of waste on site must follow LLNL's policies (including implementing the Storm Water Pollution Prevention Plan Best Management Practices (SWPPP BMPs).

8.4 Disposal of Materials

Construction products with recycled content SHALL be used whenever possible. However, performance standards, feasibility, and cost effectiveness SHALL be evaluated prior to use. For demolition projects, the Project RI SHALL coordinate with the ES&H Team EA and DUS representative to ensure the recycling of as much demolition debris as possible.

Periodically, as needed, and at the conclusion of the job, all solid waste materials SHALL be removed and properly disposed of in accordance with LLNL waste disposal procedures. Contact the ES&H Team EA for disposal requirements. Refer to Attachment F for information and material release protocols that are followed on D&D projects.

8.4.1 Waste Generation

D&D activities pose the possibility of generating large amounts of hazardous, non-hazardous, radioactive, and non-hazardous controlled wastes. All efforts will be pursued to avoid the creation of mixed wastes, or the creation of a secondary controlled waste streams. Pollution prevention and waste minimization opportunities SHALL be sought and incorporated into all D&D project activities.

a) Demolition and disposal of various equipment and debris SHALL be evaluated by the ES&H Team EA to determine hazardous and/or radioactive characteristics of equipment/materials. Evaluation will include compliance with DOE's recycling moratorium at LLNL. DOE's policy is to recycle material that meets the release level. The EA will determine the appropriate disposition.

b) Pre-construction soil, asphalt, and concrete sampling or surveying is required prior to soil excavation and asphalt/concrete removal.

c) The ES&H Team EA SHALL review sample analytical data and/or due diligence documentation and provide the Project RI with documentation regarding the management of excess soil, asphalt, and concrete generated during the project.

d) Waste storage practices SHALL include implementing BMPs identified in the SWPPP to prevent contact with storm water runoff.

e) Waste that is below 10CFR 835 releasable but above background SHALL be disposed of by LLNL.

8.4.2 Non-Hazardous Building Debris

During D&D activities, non-hazardous building debris SHALL be sorted and segregated for disposal. The D&D team and its subcontractors SHALL separate excess materials (i.e., concrete, soil, asphalt, and piping) as follows:

a) Non-hazardous debris SHALL NOT be released without prior written approval of the ES&H Team EA.

b) Excess soil, concrete and/or rubble to be disposed or reused offsite may be released only to an approved Class I, Class II or Class III landfill as directed by the ES&H EA. No soil, concrete or rubble may be released to a non-approved facility such as an unclassified landfill (i.e., CalMat, Pleasanton).

c) Non-hazardous or recycled materials SHALL NOT be transported to final disposition unless properly released.

d) Materials removed from the project site for temporary storage SHALL be properly identified.

e) Soil piles staged for future disposal must be clearly identified and protected to avoid contaminating the environment. At Site 300, soil piles must be staged following procedures established for the clean soil storage area.

f) Storage practices must include implementing BMPs identified in the SWPPP to prevent contact with storm water runoff.

8.4.3 Wastewater Discharges

All water and wastewater discharges SHALL be in compliance with LLNL's permits as applicable including National Pollutant Discharge Elimination System (NPDES) permit and Waste Discharge Approval Requirements (WDARs) and the Livermore Water Reclamation Plant (LWRP) permit. Discharges from Site 300 must have prior approval from the EPD and the City of Livermore before discharging to the Livermore site sanitary sewer.

a) The ES&H Team or Environmental Stewardship & Planning Division (ESPD) EA SHALL coordinate the evaluation of wastewater issues to determine proper disposal.

b) The Project RI SHALL work with the EA to identify and protect storm drains within the project drainage area from accidental discharge of waste from construction and demolition activities, such as sediment, paints, oils, and gasoline.

c) All wastewater containing soaps, chemicals, or other contaminants SHALL NOT be discharged to the storm drainage system or ground. These discharges SHALL be collected and discharged to the Livermore site sanitary sewer (with an approved WDAR) or disposed as non-sewerable waste.

d) Wastewater from boiler cleaning and flushing SHALL NOT be discharged to the storm drainage system or to ground.

e) Boiler cleaning effluents may be discharged to the Livermore site sanitary sewer (following characterization with an approved WDAR) or collected and managed appropriately as waste.

f) All wastewater that is discharged to the Livermore site sanitary sewer SHALL be properly characterized to determine if the discharge is consistent with LLNL discharge standards.

g) The EA SHALL contact the appropriate personnel to update the building drain management database reflecting changes resulting from the demolition activity.

8.4.4 Concrete Wastewater Management

D&D activities include saw cutting and demolition of concrete structures, which utilize water as a cutting and cooling medium. These operations pose the potential for generating large quantities of potentially contaminated wastewater. Concrete wastewater management must follow the BMPs identified in the SWPPP for the site where work is conducted.

a) Wastewater generated from concrete mixing, concrete cutting, and equipment rinsing activities SHALL not be discharged to the sanitary sewer or to the storm drainage system. When using wet cutting techniques, vacuum up or collect slurry for proper disposal.

b) IF contamination of the concrete is not suspected, THEN saw cutting slurry may be discharged to a low spot created with the guidance of EPD. This discharge area SHALL be isolated from the storm drainage system.

c) IF contamination of the concrete is known or suspected, THEN collect or vacuum the wastewater into drums for sampling, characterization, and proper disposal. All wastewater collected SHALL be released after characterization and approval by the ES&H Team EA.

8.4.5 Waste Accumulation Areas

The Facilities Management Department manages a Consolidated Waste Accumulation Area (CWAA) where all D&D project wastes that are required to be controlled are stored. Therefore, authorization from the D&D Group Leader SHALL be obtained before establishing a temporary WAA to support any D&D project.

If a temporary WAA is established the following controls SHALL be followed:

a) The ES&H Team EA SHALL prepare and obtain approval for a WAA contingency plan. The WAA contingency plan SHALL specify appropriate responsibilities, emergency equipment, and required actions to mitigate incidents.

b) A WAA Operator SHALL be assigned by the RI. The WAA Operator is responsible for performing the day-to-day operations and activities at the WAA. The WAA operator is often the RHWM field technician, whose responsibilities include:

- Receiving waste from generator and maintenance of waste containers in WAA;

- Conducting weekly inspections;
- Maintaining required safety equipment
- Preparing waste for transportation to RHWM;
- Maintaining documentation associated with the WAA operations and activities; and
- Maintaining an inventory of waste in the WAA.

c) A WAA Coordinator SHALL be assigned by the RI. The WAA Coordinator is responsible for overseeing the operations and activities performed at the WAA. The WAA Coordinator is responsible for:

- Ensuring that required safety and spill response equipment is maintained in the WAA.
- Reporting WAA activities to management.
- Reviewing WAA inspection records, waste requisition discrepancy forms, and other documentation associated with WAA operations, as needed.
- Informing the EA, ES&H Team leader, and authorizing organization (program line management) of all releases (leaks or spills).

d) The WAA SHALL be set up and managed in accordance with policies described in Document 36.3, "Management of Satellite and Waste Accumulation Areas" of the ES&H Manual, the Hazardous Waste Generation and Certification training course (EP-0006) and the WAA Coordinator/Operator Training course (EP-0053).

e) Low Level Waste (LLW) to be disposed of at the Nevada Test Site (NTS) SHALL be evaluated and approved by an ES&H Team EA and an RHWM RCA. This waste SHALL be stored in a designated DOT approved transport container pending final disposition. There are no time limits required by law for the accumulation of radioactive waste. However, as a best management practice, LLNL often follows the 9-month accumulation time limit for the onsite storage of hazardous waste.

f) Upon completion of the project, the WAA Coordinator and Operator SHALL close the WAA with assistance from the ES&H Team EA in accordance with the WAA guidelines.

g) IF radiological airborne monitoring of stored waste is deemed necessary by the ES&H Team HP and/or EA, THEN, per the discretion of the EA, analytical results SHALL be forwarded to PRAD. PRAD personnel SHALL evaluate the emissions data to ensure D&D compliance with NESHAPs requirements.

8.5 D&D Standard Operating Procedures

D&D has six generic SOPs in place for the removal and disposition of materials as follows:

- Removal of Potentially Contaminated/Contaminated Ventilation Systems, Piping, and Associated Equipment
- Removal of Potentially Contaminated/Hazardous Above-Grade Pipe
- Removal of Potentially Contaminated/Hazardous Below-Grade Pipe

- Removal of Potentially Contaminated Box-Type HEPA Filters
- Dismantling and Removal or Maintenance of a Ventilation System Contaminated with Perchlorates
- Vacuum Pump Disposition

These SOPS are included in Attachment H for reference and should be referred to for all D&D projects.

8.6 Satellite Accumulation Area (SAA)

Hazardous and mixed wastes generated in the workplace SHALL be collected in Satellite Accumulation Areas (SAAs). These SAAs SHALL be established and managed in accordance with requirements in EP-0006 Hazardous Waste Generation and Certification Training Manual, Lessons 3 & 4 and Document 36.3, "Management of Satellite and Waste Accumulation Areas" of the ES&H Manual.

Guidance for Satellite Accumulation Areas (SAAs) are as follows:

a) Hazardous waste SHALL be accumulated in containers.

b) Hazardous waste SHALL be accumulated "at the initial point of accumulation, which is at or near the area where the waste is originally generated." The process generating the waste and the satellite accumulation point SHALL be in the same room or work area.

c) The SAA SHALL be "under the control" of the operator of the process generating the waste. The term "operator" refers to the "hands-on" operator of the machinery or activity that generates the waste and not the overall operator of the facility. The SAA is to be in the "line of sight" of the operator or in a locked compartment or area to which ONLY the operator controls access.

d) One operator SHALL retain overall responsibility and control of the SAA to ensure proper management of the waste in order to prevent incompatible mixing of wastes and to ensure waste is properly characterized and placed in the appropriate waste container.

e) The responsible operator will sign the waste disposal requisition form and is required to complete the initial Hazardous Waste Generation and Certification course (EP-0006) and attend an annual refresher course thereafter (EP-0006-R).

f) An operator may "accumulate as much as 55 gallons of hazardous waste at or near any point of generation" except as provided below:

- If not all of the waste streams generated by this process and located within the same physical area are compatible, a separate 55-gallon limit applies to each group of waste streams that are compatible.
- If the generator determines that using only one 55-gallon container (or one-quart container for extremely accumulate specific compatible waste streams is not practical (e.g., prevents recycling or requires unreasonable accumulation procedures), or is not safe from an environmental or worker/public health and safety standpoint, the

generator may apply a separate 55-gallon (or one-quart) limit to those specific compatible waste streams.

g) The accumulation containers must have a proper Hazardous Waste Label affixed to the outside of the container that is filled out with the start date of accumulation, the composition and physical state of the waste, the hazardous properties of the waste, and the name and extension of the generator.

h) The accumulation containers must be kept closed except when it is necessary to add or remove waste. The DTSC considers containers closed when the lid is tightly in place such that waste material or vapors contained within would not escape in the event the container is accidentally tipped over.

i) The waste containers must be moved out of the SAA to the WAA no later than nine months after waste is first added to the container, or when the container is full, whichever occurs first. Once the containers have reached the specified quantity (55-gallons or one-quart), the generator must move the container to the WAA within three days of the workplace end date and comply with the 90-day storage limit. The 90-day clock starts on the workplace accumulation end date. The term "day" means calendar day. Periods of time are calculated by excluding the first day and including the last. However, if the last day is a Saturday, Sunday, or holiday specified in Government Code, Section 6700, it is also excluded.

8.7 Waste Minimization and Pollution Prevention

ERD D&D is committed to implement pollution prevention and waste minimization (P2/WMin) on D&D projects in support of the institutional Environmental Management System (EMS). Therefore, P2/WMin SHALL be incorporated into ALL project plans beginning with the end state (waste disposal) in mind.

P2/WMin can reduce D&D costs by minimizing time spent by staff on the resolution of waste management issues and documentation. Practices that facilitate P2/WMin include but are not limited to the following:

a) Surgical removal of contamination to minimize waste and maximize recycle/reuse in accordance with DOE's recycling moratorium. If the material meets the release criteria established for the site, it can be recycled. If not, it will be painted with a blue color and then disposed of at a landfill by direct burial. In this case, LLNL will handle the disposal. Any material that has been painted blue will be managed under the site's RCRA profile and may not be recycled.

b) Project assessment of P2/WMin opportunities through assets-for-value contracting.

c) Design of D&D processes to allow most efficient reuse and recycling of D&D materials.

d) Proper waste segregation and spill prevention during D&D operations.

e) Development and use of Historical Operations and Hazards maps.

In addition, the Project RI SHALL work with the ES&H Team Disciplines to evaluate the project during the planning phase to establish cost effective recycling and reutilization strategies for

demolished materials. The net results of which SHALL be directed to extract the highest value from decommissioned and demolished materials and to minimize waste management costs as well as reduce D&D costs.

8.8 Storm Water Pollution Prevention

D&D activities pose the potential to negatively affect storm water quality. To minimize this potential D&D projects must implement appropriate controls as identified in LLNL policies, and state and federal regulations. LLNL implements distinct site-wide storm water pollution prevention programs at the Livermore site (Site 200) and Site 300. D&D projects that disturb one acre or more (including project site and any associated laydown areas) are required to obtain a construction storm water permit and implement a project specific construction activity SWPPP. Each project, regardless of the level of documentation required, SHALL implement these basic principles of storm water pollution prevention.

8.8.1 Project Site Perimeter Control

a) Prevent clean runoff from locations off the project site from flowing through areas disturbed by the project. This may include diverting runoff around the project site or conveying runoff through non-erosive swales or piping to a stabilized storm drain.

b) Prevent sediment-contaminated runoff from leaving the site. This may be accomplished with a variety of sediment control measures around the site perimeter and at all storm drains within the project site and/or through sediment settling basins.

c) Prevent tracking of sediment from the project site onto surrounding roads. This may be accomplished by controlling ingress and egress points through stabilized entrances and wheel washes.

8.8.2 Erosion Control

Protect inactive disturbed areas and soil piles during the project through the use of temporary vegetation, tacked or crimped straw, rolled erosion control products, or gravel.

8.8.3 Material and Waste Storage and Handling

a) Store all materials that have the potential to pollute storm water (primarily liquids and powders) in a manner that prevents contact with the rain and runoff, such as in water-tight sheds and containers, in secondary containment, inside buildings, or under secured tarps.

b) Use covered dumpsters with closed drain holes.

c) Maintain orderly storage areas.

d) Place materials on pallets.

8.8.4 Good Housekeeping

a) Clean up the jobsite at the close of each work day.

b) Return unused materials to the appropriate storage location.

c) Properly dispose of all wastes.

d) Close dumpsters when not in use and at the end of the day.

8.8.5 Inspections

Regularly inspect ALL areas of the jobsite, including the work areas, site perimeters, and laydown areas for proper implementation and adequacy of all control measures. Document all inspections.

8.8.6 Training

Provide SWPPP awareness training for all workers whose job activities may result in storm water pollution. Include general SWPPP awareness topics in the tailgate meetings. Provide specialized training for inspectors, RIs.

8.8.7 Final Stabilization

All disturbed areas must be stabilized before the project is considered complete. Stabilization may be achieved by using gravel, vegetation, asphalt or concrete, or permanent mulch. Note that vegetated areas must have a 70% uniform coverage of the surface to be considered stabilized.

9.0 TRAINING AND REQUIRED READING

Note: Individuals hard-matrixed to D&D performing technical work, are required to maintain an annual qualification card to work under this SOP.

The SOP RI is responsible for the basic training requirements for matrix employees working under the auspices of this SOP. Other job-specific training may be required and this training shall be documented in the training matrix or equivalent document. The Project RI shall ensure that all required programmatic training is complete and documented prior to requesting authorization to proceed.

10.0 EQUIPMENT MAINTENANCE AND INSPECTIONS

All tools and equipment used on D&D projects are controlled by the Tool Crib Operator. Equipment maintenance and Inspection is governed by the operating procedures for the Tool Cribs. The Project RI SHALL ensure that all tools and equipment purchased or used by the project is handled in accordance with the tool crib procedures while on the project and is properly packaged, labeled, and returned to the Tool Crib when the project is complete.

Additionally, the Project RI SHALL repair or replace any damaged equipment before the project can be closed out.

11.0 PROJECT QUALITY ASSURANCE

The Project RI SHALL ensure that formal and informal self assessments are conducted, documented, and reviewed annually. The D&D Project Self Assessments SHALL be utilized for evaluating ES&H compliance, process improvement, and to identify areas requiring procedural modifications. Lessons Learned during the performance of D&D projects SHALL be incorporated into all future projects and subsequent SOP reviews as appropriate. In addition, Project RIs SHALL schedule peer reviews to review adherence to this SOP, the project IWS(s), and Safety Plan(s) with other D&D Project Leaders and Project ES&H Technicians.

12.0 EMERGENCY RESPONSE PLANS AND PROCEDURES

In the event of an emergency, including electrical shocks, immediately DIAL **911** OR if calling from a cellular phone, dial **925-447-6880**. LLNL has dedicated x911 as the dedicated emergency number for reporting emergency information to the Lab Fire Dispatcher. In addition the following requirements shall be met:

a) Upon arriving at the site medical facility, Health Services personnel SHALL be provided with information necessary to treat individuals exposed to hazardous and/or radioactive material greater than regulatory limits.

b) D&D project personnel SHALL be familiar with the emergency evacuation routes and self-help assembly locations associated with the assigned projects.

12.1 Personnel or Area Contamination

In the event a person or area experiences uncontrolled or unplanned hazardous or radioactive contamination, (e.g., by an alarming continuous air monitor, an announcement by coworker, the spilling of radioactive material, or monitoring of the workplace):

a) Leave the room or immediate area and wait nearby (i.e., in a predetermined holding area). This shall minimize the chances of breathing airborne material.

b) Ask an uncontaminated coworker, if one is available, to call Hazards Control for assistance. This, and waiting in the vicinity, will help avoid the spread of contamination.

c) Stay in place (nearby) until monitored and released by Hazards Control personnel. Instruct others to stay out of potentially contaminated areas. Declare a “Stop Work” if needed.

d) Do not re-enter the work area until authorized to do so by the H&S Technician.

e) Notify the AI, RI, and ES&H Team Leader as soon as possible.

12.2 Standard Decontamination Procedures for Personal Clothing or Skin Contamination

If an individual suspects personal clothing or skin contamination with radioactive or non-liquid hazardous materials, the following steps shall be taken:

a) Contact the H&S Technician for assistance in determining the extent of contamination.

b) The H&S Technician shall consult the appropriate discipline to determine suitable decontamination procedures and determine if transportation to HSD is required.

c) If any decontamination is performed in the field (e.g., washing skin with mild soap and warm water), collect and retain all waste. Contact the area EA for proper characterization and disposal of waste generated.

d) Notify the supervisor, RI, AI, ES&H Team Leader, and appropriate F&I disciplines of the incident and conditions.

e) If an individual's clothing, skin or eyes may have become contaminated with a liquid hazardous material, the following steps shall be taken:

   1) Immediately remove the contaminated clothing and begin flushing skin or eyes with water for a minimum of 15 minutes.

   2) Seek medical treatment at HSD or other medical provider.

   3) If any decontamination is performed in the field (i.e., washing skin with mild soap and warm water), collect and retain all waste. Contact the area EA for proper characterization and disposal of waste generated.

13.0 ACRONYMS AND ABBREVIATIONS

ACM	Asbestos-Containing Material
ACGIH	American Conference of Governmental Industrial Hygienists
AHJ	Authority Having Jurisdiction
AL	Action Level
BAAQMD	Bay Area Air Quality Management District
BMP	Best Management Practices
CERCLA	Comprehensive Environmental Response, Compensation, and Liability Act
CFR	Code of Federal Regulations
CWAA	Consolidated Waste Accumulation Area
dBA	Decibel (A-weighted scale)
D&D	Deactivation, Decontamination, Decommissioning, and Demolition
DOE	Department of Energy
EA	Environmental Analyst
EPD	Environmental Protection Department
ES&H	Environmental, Safety, and Health
EMAD	Environmental Monitoring and Analytical Division
FPE	Fire Protection Engineer
GFCI	Ground Fault Circuit Interrupters
H&S TECH	Health & Safety Technician
HAC	Hazards Assessment and Control document
HEPA	High Efficiency Particulate Air
HP	Health Physicist
HPD	Hearing Protective Devices
HVAC	Heat, Ventilation, and Air Conditioning
IH	Industrial Hygienist
ISE	Industrial Safety Engineer
ISM	Integrated Safety Management
IWS	Integration Worksheet
LCM	Lead-Containing Materials
LLNL	Lawrence Livermore National Laboratory
LLW	Low-Level Waste
LOTO	Lockout & Tagout
MATT	Monthly Accounting Tracking Tool
MOP	Maintenance Operations Procedure

MUSD	Maintenance and Utility Department
NEC	National Electric Code
NEPA	National Environmental Policy Act
NESHAP	National Emissions Standard for Hazardous Air Pollutants
NHPA	National Historic Preservation Act
NTS	Nevada Test Site
NOV	Notice of Violation
OSHA	Occupational Safety and Health Administration
P2/WMin	Pollution Prevention and Waste Minimization
PACM	Presumed Asbestos-Containing Materials
PM	Project Manager
POC	Point of Contact
PPE	Personal Protective Equipment
PRAD	Permits and Regulatory Affairs Division
PTHA	Pre-Task Hazards Analysis
RACM	Regulated Asbestos Containing Material
RCA	Radiological Characterization Analyst
RCRA	Resource Conservation Recovery Act
RHWM	Radioactive Hazardous Waste Management
RI	Responsible Individual
RPIE	Real Property and Installed Equipment
SAA	Satellite Accumulation Area
SJVUAPCD	San Joaquin Valley Unified Air Pollution Control District
SME	Subject Matter Expert
SOP	Standard Operating Procedure
SSC	Structure, Sub-Systems, and Components
SSSP	Site Specific Safety Plan
SWPPP	Storm Water Pollution Prevention Plan
TLD	Thermo luminescent dosimeter
TYSP	Ten Year Site Plan
TLV	Threshold Limit Value
TWA	Time Weighted Average
WAA	Waste Accumulation Area
WAC	Waste Acceptance Criteria
WDAR	Waste Discharge Approval Requirements
WDR	Waste Disposal Requisition

Attachment A

SOP Communication Form

SOP COMMUNICATION FORM

In accordance with the requirements of Section 4.2 (c) of this SOP, The SOP RI SHALL, upon completion of training, ensure that this *SOP Communication Form*, is completed and submitted to the ERD's Assurance Office.

The SOP RI SHALL verify and document that personnel working under the direction of this safety plan read and agree to comply with the safety plan before beginning work on an activity controlled by this safety plan.

All individuals listed below affirm that they have read and agree to comply with the attached safety plan.

NAME	SIGNATURE	REVIEW DATE

For record keeping purposes, ensure a copy of this completed form is submitted to the Assurance Office after each review.

Attachment B

D&D Team
Communication Process Flow Diagram

D&D TEAM – Communication Process Flow Diagram

Immediate Actions

"Employee health & safety is the overriding priority"

Event

Immediate Notifications

Stop Work

Employee or co-worker notify Supervisor/RI of the event

•Secure and preserve event site
•Notify Hazards Control
Call 911
Cell 447-6880
•Accompany any injured employee(s) to Health Services
•Supervisors report any work related injuries to Health Services if:
-work injury occurred off hours
-injured employee reports to their private physician

Supervisor/ RI notify Division/Department Office, Department Safety Officer

Department Office notify Directorate Office, F&I Assurance/Safety Mgrs

Follow-up Reporting

Supervisor/RI completes Page 1 of **Incident/Injury Brief** with employee(s)

Complete Within 1st hour

F&I Assurance Manager determines Occurrence/ Non-Conformance-Tracking-System Reportable

Supervisor/RI, Safety Officer, ES&H Investigator discuss event with employee and complete Page 2 of **Incident/Injury Brief**

CFFA Team
As required
Line Mgr, 1st Line / RI, Dept. Safety Office, Assurance Manager, HPI Practitioner, Employee / Co-workers

Line Manager assembles Critique and Fact Finding Assessment (CFFA) if necessary or required

Supervisor / RI completes **eCAR** as required

Line Manager implements corrective actions or compensatory measures through a Senior Supervisory Watch before authorizing work restart

Supervisor distributes completed **Incident/Injury Brief**
F&I Assurance Officer
F&I Safety Manager
Dept. Safety Officer

Feedback

Safety Team develops a Feedback Improvement Lessons Learned (FILL) or Safety Alert to discuss and distribute across the F&I Directorate

ISM

Attachment C

D&D Team
OSHA Regulations, Subpart T- Demolition

Subpart T - Demolition

§1926.850
Preparatory operations

(a) **Prior to permitting employees** to start demolition operations, an engineering survey shall be made, by a competent person, of the structure to determine the condition of the framing, floors, and walls, and possibility of unplanned collapse of any portion of the structure. Any adjacent structure where employees may be exposed shall also be similarly checked. The employer shall have in writing evidence that such a survey has been performed.

(b) **When employees are required** to work within a structure to be demolished which has been damaged by fire, flood, explosion, or other cause, the walls or floor shall be shored or braced.

(c) **All electric, gas, water, steam,** sewer, and other service lines shall be shut off, capped, or otherwise controlled, outside the building line before demolition work is started. In each case, any utility company which is involved shall be notified in advance.

(d) **If it is necessary to maintain** any power, water or other utilities during demolition, such lines shall be temporarily relocated, as necessary, and protected.

(e) **It shall also be determined** if any type of hazardous chemicals, gases, explosives, flammable materials, or similarly dangerous substances have been used in any pipes, tanks, or other equipment on the property. When the presence of any such substances is apparent or suspected, testing and purging shall be performed and the hazard eliminated before demolition is started.

(f) **Where a hazard exists from fragmentation of glass,** such hazards shall be removed.

(g) **Where a hazard exists to employees** falling through wall openings, the opening shall be protected to a height of approximately 42 inches.

(h) **When debris is dropped through holes in the floor** without the use of chutes, the area onto which the material is dropped shall be completely enclosed with barricades not less than 42 inches high and not less than 6 feet back from the projected edge of the opening above. Signs, warning of the hazard of falling materials, shall be posted at each level. Removal shall not be permitted in this lower area until debris handling ceases above.

(i) **All floor openings, not used as material drops,** shall be covered over with material substantial enough to support the weight of any load which may be imposed. Such material shall be properly secured to prevent its accidental movement.

(j) **Except for the cutting of holes in floors for chutes,** holes through which to drop materials, preparation of storage space, and similar necessary preparatory work, the demolition of exterior walls and floor construction shall begin at the top of the structure and proceed downward. Each story of exterior wall and floor construction shall be removed and dropped into the storage space before commencing the removal of exterior walls and floors in the story next below.

(k) **Employee entrances to multi-story structures** being demolished shall be completely protected by sidewalk sheds or canopies, or both, providing protection from the face of the building for a minimum of 8 feet. All such canopies shall be at least 2 feet wider than the building entrances or openings (1 foot wider on each side thereof), and shall be capable of sustaining a load of 150 pounds per square foot.

§1926.851
Stairs, passageways, and ladders

(a) **Only those stairways, passageways, and ladders,** designated as means of access to the structure of a building, shall be used. Other access ways shall be entirely closed at all times.

(b) **All stairs, passageways, ladders** and incidental equipment thereto, which are covered by this section, shall be periodically inspected and maintained in a clean safe condition.

(c) **In a multistory building, when a stairwell is being used,** it shall be properly illuminated by either natural or artificial means, and completely and substantially covered over at a point not less than two floors below the floor on which work is being performed, and access to the floor where the work is in progress shall be through a properly lighted, protected, and separate passageway.

§1926.852
Chutes

(a) **No material shall be dropped** to any point lying outside the exterior walls of the structure unless the area is effectively protected.

(b) **All materials chutes, or sections thereof,** at an angle of more than 45° from the horizontal, shall be entirely enclosed, except for openings equipped with closures at or about floor level for the insertion of materials. The openings shall not exceed 48 inches in height measured along the wall of the chute. At all stories below the top floor, such openings shall be kept closed when not in use.

(c) **A substantial gate shall be installed in each chute** at or near the discharge end. A competent employee shall be assigned to control the operation of the gate, and the backing and loading of trucks.

(d) **When operations are not in progress,** the area surrounding the discharge end of a chute shall be securely closed off.

(e) **Any chute opening, into which workmen dump debris,** shall be protected by a substantial guardrail approximately 42 inches above the floor or other surface on which the men stand to dump the material. Any space between the chute and the edge of openings in the floors through which it passes shall be solidly covered over.

(f) **Where the material is dumped** from mechanical equipment or wheelbarrows, a securely attached toeboard or bumper, not less than 4 inches thick and 6 inches high, shall be provided at each chute opening.

(g) **Chutes shall be designed and constructed** of such strength as to eliminate failure due to impact of materials or debris loaded therein.

§1926.853
Removal of materials through floor openings

Any openings cut in a floor for the disposal of materials shall be no larger in size than 25 percent of the aggregate of the total floor area, unless the lateral supports of the removed flooring remain in place. Floors weakened or otherwise made unsafe by demolition operations shall be shored to carry safely the intended imposed load from demolition operations.

§1926.854
Removal of walls, masonry sections, and chimneys

(a) **Masonry walls, or other sections of masonry,** shall not be permitted to fall upon the floors of the building in such masses as to exceed the safe carrying capacities of the floors.

(b) **No wall section, which is more than one story in height,** shall be permitted to stand alone without lateral bracing, unless such wall was originally designed and constructed to stand without such lateral support, and is in a condition safe enough to be self-supporting. All walls shall be left in a stable condition at the end of each shift.

(c) **Employees shall not be permitted** to work on the top of a wall when weather conditions constitute a hazard.

(d) **Structural or load-supporting members on any floor** shall not be cut or removed until all stories above such a floor have been demolished and removed. This provision shall not prohibit the cutting of floor beams for the disposal of materials or for the installation of equipment, provided that the requirements of §§1926.853 and 1926.855 are met.

(e) **Floor openings within 10 feet of any wall being demolished** shall be planked solid, except when employees are kept out of the area below.

(f) **In buildings of "skeleton-steel" construction,** the steel framing may be left in place during the demolition of masonry. Where this is done, all steel beams, girders, and similar structural supports shall be cleared of all loose material as the masonry demolition progresses downward.

(g) **Walkways or ladders shall be provided** to enable employees to safely reach or leave any scaffold or wall.

(h) **Walls, which serve as retaining walls** to support earth or adjoining structures, shall not be demolished until such earth has been properly braced or adjoining structures have been properly underpinned.

(i) **Walls, which are to serve as retaining walls** against which debris will be piled, shall not be so used unless capable of safely supporting the imposed load.

§1926.855
Manual removal of floors

(a) **Openings cut in a floor shall extend** the full span of the arch between supports.
(b) **Before demolishing any floor arch,** debris and other material shall be removed from such arch and other adjacent floor area. Planks not less than 2 inches by 10 inches in cross section, full size undressed, shall be provided for, and shall be used by employees to stand on while breaking down floor arches between beams. Such planks shall be so located as to provide a safe support for the workmen should the arch between the beams collapse. The open space between planks shall not exceed 16 inches.
(c) **Safe walkways, not less than 18 inches wide,** formed of planks not less than 2 inches thick if wood, or of equivalent strength if metal, shall be provided and used by workmen when necessary to enable them to reach any point without walking upon exposed beams.
(d) **Stringers of ample strength shall be installed** to support the flooring planks, and the ends of such stringers shall be supported by floor beams or girders, and not by floor arches alone.
(e) **Planks shall be laid together over solid bearings** with the ends overlapping at least 1 foot.
(f) **When floor arches are being removed,** employees shall not be allowed in the area directly underneath, and such an area shall be barricaded to prevent access to it.
(g) **Demolition of floor arches shall not be started** until they, and the surrounding floor area for a distance of 20 feet, have been cleared of debris and any other unnecessary materials.

§1926.856
Removal of walls, floors, and material with equipment

(a) **Mechanical equipment shall not be used** on floors or working surfaces unless such floors or surfaces are of sufficient strength to support the imposed load.
(b) **Floor openings shall have curbs or stop-logs** to prevent equipment from running over the edge.
(c) **Mechanical equipment used** shall meet the requirements specified in Subparts N and O of this part.

§1926.857
Storage

(a) **The storage of waste material and debris on any floor** shall not exceed the allowable floor loads.
(b) **In buildings having wooden floor construction,** the flooring boards may be removed from not more than one floor above grade to provide storage space for debris, provided falling material is not permitted to endanger the stability of the structure.
(c) **When wood floor beams serve to brace interior walls** or free-standing exterior walls, such beams shall be left in place until other equivalent support can be installed to replace them.
(d) **Floor arches, to an elevation** of not more than 25 feet above grade, may be removed to provide storage area for debris: Provided, that such removal does not endanger the stability of the structure.
(e) **Storage space into which material is dumped** shall be blocked off, except for openings necessary for the removal of material. Such openings shall be kept closed at all times when material is not being removed.

§1926.858
Removal of steel construction

(a) **When floor arches have been removed,** planking in accordance with §1926.855(b) shall be provided for the workers engaged in razing the steel framing.
(b) **Cranes, derricks, and other hoisting equipment used** shall meet the requirements specified in Subpart N of this part.
(c) **Steel construction shall be dismantled** column length by column length, and tier by tier (columns may be in two-story lengths).
(d) **Any structural member being dismembered** shall not be overstressed.

§1926.859
Mechanical demolition

(a) **No workers shall be permitted in any area,** which can be adversely affected by demolition operations, when balling or clamming is being performed. Only those workers necessary for the performance of the operations shall be permitted in this area at any other time.
(b) **The weight of the demolition ball** shall not exceed 50 percent of the crane's rated load, based on the length of the boom and the maximum angle of operation at which the demolition ball will be used, or it shall not exceed 25 percent of the nominal breaking strength of the line by which it is suspended, whichever results in a lesser value.
(c) **The crane boom and loadline shall be as short as possible.**
(d) **The ball shall be attached to the loadline** with a swivel-type connection to prevent twisting of the loadline, and shall be attached by positive means in such manner that the weight cannot become accidentally disconnected.
(e) **When pulling over walls or portions thereof,** all steel members affected shall have been previously cut free.
(f) **All roof cornices or other such ornamental stonework** shall be removed prior to pulling walls over.
(g) **During demolition continuing inspections** by a competent person shall be made as the work progresses to detect hazards resulting from weakened or deteriorated floors, or walls, or loosened material. No employee shall be permitted to work where such hazards exist until they are corrected by shoring, bracing, or other effective means.

§1926.860
Selective demolition by explosives

Selective demolition by explosives shall be conducted in accordance with the applicable sections of Subpart U of this part.

1926 Subpart T

Authority for 1926 Subpart T

Authority: Sec. 107, Contract Work Hours and Safety Standards Act (Construction Safety Act) (40 U.S.C. 333); Secs. 4, 6, 8, Occupational Safety and Health Act of 1970 (29 U.S.C. 653, 655, 657); Secretary of Labor's Order No. 12-71 (36 FR 8754), 8-76 (41 FR 25059), or 9-83 (48 FR 35736), as applicable.

Attachment D

Workforce Planning Documentation

D-1: Project Pipeline Example

D-2: Project Assignments

D-3: Resource Loading Example

Project	RI	Project #	MOU	Initial Funding Authorizations										Regulatory Approval for Demo							Planning & Subcontracting							Characterization					Deactivation Planning				Project Set Up														Execution								Close	
			Transfer MOU	Project Data Sheet (AKA Project Criteria Sheet)	Financial Request for Approval	LSO Project Authorization	WAS From DOE HQ	Develop SAT Charter and Mission Need Stmnt	CD-0 (IFM Charter) Approve Mission Need & Planning $	Authorization Letter from LSO	Establish Project Binder	1st Roundtable	Historical Information Gathering	PE Findings & Determinations Letter	DOE HQ AFD	NEPA	NHPA	PEF Including Sched and $ Range	Acquisition Strategy	CD-1 PEP, Acq Strategy, $ Range Appr	Procurement SOW & Purchase Requisition	IWS and/or PWS Development & Green Light	Issue RFP	Hazards Operations Map Development	Sample Plan Development	Sampling Pre-Start	Conduct Preliminary Sampling	Area Deactivation Map	Line Location	Electrical Deactivation Plan Development	Mechanical Deactivation Plan Development	Detailed Baseline Schedule	CD-2/3 Approval to Spend $ Pre-Demo	2nd Roundtable	Property I.D. / Transfer	War Room Set Up	Obtain Fire Department Approval of Fence Line	Set Up Project Boundary (Fence Line)	WAA Set Up	Asbestos Permit Submitted (10 Day Wait)	Demolition Permit (10 Day Wait)	Deactivation Pre-Start	Deactivation Field Work	Contractor Award	Contractor Submittals for Review	Contractor Recieves NTP & Mobilizes	Abatement & Demolition Pre-Start	Abatement & Demolition Field Work	CD-4 Closeout	
FY08 D&D Plan & Prep	Auble	n/a	n/a	X	X		X	N/A	N/A		X	N/A	IP	N/A	N/A	N/A	N/A																																				
443/444 FIRP D&D	Rob																																																			
175 D&D Planning																																																			
FY08 FIRP Trailers	Dennis																																																		
1400 Trailers TD D&D	Michele																																																		
243 TD D&D	Michele																																																		
292 TD D&D (413.3A)	Rob																																																		
241 TD D&D (413.3A)	Dennis																																																		
FY09 Misc Trailers																																																			
321BE (IFM)																																																			
B443/444 D&D	Robison	Divoky									X														X	X			X				IP	N/A																		Waiting for project approval. Most planning was conducted in FY05. Planning docs need to be re-visited.
SAT Waste Disposal	Robison	Divoky																																																	Waiting for project approval.

FY09 Project Assignments D-2

Project	RI	Alt RI	Start	Finish		OCT	NOV	DEC	JAN	FEB	MAR	APR	MAY	JUN	JULY	AUG	SEP

PROJECT	RI	Alt RI	IFC ($)	FIRP (K)	Office of Science (K)	Other	Effort Total		Senior PM	Project Manager	EM Coord	CAD	Cost Est/Sched.	Info Manager	Admin	Tm 2 Deputy TL	Tm 2 Sec	DR	H&S Tech Sup	H&S Tech	HP	IH	IS	FP	EA	RHWM Waste Mngr	RHWM Techs	RCA	Craft Supvr	Electrician	Laborer D&D Workers	Plumber	Effort Cost
FY07									Projects							ES&H Team 2										Crafts							
								Program FTEs	0.50	0.00	0.00	0.00	0.00	0.00	0.20	0.00	0.00	0.00	0.00	0.00	0.00	0.00	0.00	0.00	0.00	0.00	0.00	0.00	0.00	0.00	0.00	0.00	
						G&A / IFC		Hrs	897	0	0	0	0	168	470	0	0	0	0	672	0	0	0	0	0	0	0	0	0	0	134	0	
								$	-	-	-	-	-	11,073	17,235	-	-	-	-	33,419	-	-	-	-	-	-	-	-	-	7,823	-	69,549
						PMC		Hrs	0		0	0	0	0	34	0	0	0	0	0	0	0	0	0	0	0	0	0	0	0	0	0	
								$	86,112	-	-	-	-	-	1,247	-	-	-	-	-	-	-	-	-	-	-	-	-	-	-	-	87,359
								Total Hrs	897	-	-	-	-	168	504	-	-	-	-	672	-	-	-	-	-	-	-	-	-	134	-	
								Total $s	86,112	-	-	-	-	11,073	18,482	-	-	-	-	33,419	-	-	-	-	-	-	-	-	-	7,823	-	156,908
								Project FTEs	0.50	3.00	1.00	0.75	0.50	0.75	0.80	0.45	0.35	0.00	0.40	2.08	0.20	0.25	0.50	0.15	1.00	0.00	2.00	0.30	0.50	1.16	3.00	0.68	
FY08 Trailers	Dennis	Joe		1,108			607,976	FTEs	0.093	0.304	0.030	0.021	0.023	0.010	0.020	-0.059	-0.099	0.000	0.029	0.402	0.247	0.200	0.110	0.005	0.163	0.141	0.461	0.000	0.079	0.084	0.380	0.013	
				+roll over				Hrs	183	600	60	41	45	20	40	-116	-196	0	58	793	487	395	218	10	321	279	911	0	156	165	750	25	
								$	28,548	84,000	6,480	4,387	6,930	2,320	3,080	(20,300)	(17,640)	-	9,338	68,991	74,511	54,510	27,250	1,250	39,483	41,850	69,236	-	22,932	21,120	76,500	3,200	607,976
443/444	Joe	Rob		1,292			279,323	FTEs	0.018	0.532	0.000	0.000	0.097	0.010	0.005	0.018	0.018	0.000	0.018	0.178	0.000	0.018	0.071	0.020	0.018	0.000	0.000	0.000	0.020	0.000	0.055	0.000	
				+roll over				Hrs	35	1051	0	0	192	20	10	35	35	0	35	352	0	35	140	40	35				40		108		
								$	5,460	147,140	-	-	29,568	2,320	770	6,125	3,150	-	5,635	30,624	-	4,830	17,500	5,000	4,305	-	-	-	5,880	-	11,016	-	279,323
							27,920	FTEs	0.000	0.000	0.000	0.000	0.000	0.000	0.000	0.000	0.000	0.000	0.000	0.000	0.000	0.000	0.000	0.000	0.041	0.041	0.041	0.000	0.000	0.000	0.000	0.000	
								Hrs																	80	80	80						
								$	-	-	-	-	-	-	-	-	-	-	-	-	-	-	-	-	9,840	12,000	6,080	-	-	-	-	-	27,920
							341,200	FTEs	0.041	0.253	0.101	0.061	0.010	0.020	0.020	0.010	0.008	0.000	0.010	0.051	0.051	0.030	0.010	0.005	0.051	0.051	0.020	0.000	0.000	0.284	0.284	0.041	
							56,400.0	Hrs	80	500	200	120	20	40	40	20	15	0	20	100	100	60	20	10	100	100	40			560	560	80	
								$	12,480	70,000	21,600	12,840	3,080	4,640	3,080	3,500	1,350	-	3,220	8,700	15,300	8,280	2,500	1,250	12,300	15,000	3,040	-	-	71,680	57,120	10,240	341,200
							104,853	FTEs	0.003	0.081	0.005	0.005	0.020	0.000	0.005	0.003	0.001	0.000	0.002	0.061	0.010	0.010	0.020	0.005	0.041	0.000	0.020	0.000	0.014	0.041	0.081	0.020	
							34,049.0	Hrs	5	160	9	9	40	0	9	5	2	0	4	120	20	20	40	10	80	0	40	0	28	80	160	40	
								$	780	22,400	972	963	6,160	-	693	875	180	-	644	10,440	3,060	2,760	5,000	1,250	9,840	-	3,040	-	4,116	10,240	16,320	5,120	104,853
FY08 D&D Plan & Prep	Auble	n/a		1,100			-	FTEs	0.000	0.000	0.000	0.000	0.000	0.000	0.000	0.000	0.000	0.000	0.000	0.000	0.000	0.000	0.000	0.000	0.000	0.000	0.000	0.000	0.000	0.000	0.000	0.000	
								Hrs																									
								$	-	-	-	-	-	-	-	-	-	-	-	-	-	-	-	-	-	-	-	-	-	-	-	-	-
Office of Science							-	FTEs	0.000	0.000	0.000	0.000	0.000	0.000	0.000	0.000	0.000	0.000	0.000	0.000	0.000	0.000	0.000	0.000	0.000	0.000	0.000	0.000	0.000	0.000	0.000	0.000	
								Hrs																									
								$	-	-	-	-	-	-	-	-	-	-	-	-	-	-	-	-	-	-	-	-	-	-	-	-	-
								Hrs																									
								$	-	-	-	-	-	-	-	-	-	-	-	-	-	-	-	-	-	-	-	-	-	-	-	-	-
							-	FTEs	0.000	0.000	0.000	0.000	0.000	0.000	0.000	0.000	0.000	0.000	0.000	0.000	0.000	0.000	0.000	0.000	0.000	0.000	0.000	0.000	0.000	0.000	0.000	0.000	
								Hrs																									
								$	-	-	-	-	-	-	-	-	-	-	-	-	-	-	-	-	-	-	-	-	-	-	-	-	-
							68,458	FTEs	0.003	0.025	0.000	0.000	0.004	0.002	0.002	0.002	0.001	0.000	0.001	0.080	0.007	0.015	0.003	0.000	0.004	0.000	0.012	0.000	0.025	0.004	0.342	0.000	
								Hrs	6	49	-	-	8	4	4	4	2	-	2	158	13	29	5	-	8	-	24	-	49	8	676	-	
								$	576	4,165	-	-	752	284	188	428	110	-	196	8,374	1,209	2,465	385	-	600	-	1,104	-	4,410	624	42,588	-	68,458
							98,396	FTEs	0.008	0.122	0.000	0.000	0.012	0.009	0.005	0.005	0.005	0.005	0.005	0.132	0.026	0.013	0.005	0.000	0.026	0.013	0.132	0.000	0.013	0.000	0.212	0.000	
								Hrs	15	240	-	-	24	18	10	10	10	10	10	260	52	26	10	-	52	26	260	-	26		418		
								$	1,440	20,400	-	-	2,256	1,278	470	1,070	550	1,430	980	13,780	4,836	2,210	770	-	3,900	2,392	11,960	-	2,340	-	26,334	-	98,396
							-	FTEs	0.000	0.000	0.000	0.000	0.000	0.000	0.000	0.000	0.000	0.000	0.000	0.000	0.000	0.000	0.000	0.000	0.000	0.000	0.000	0.000	0.000	0.000	0.000	0.000	
								Hrs	-	-	-	-	-	-	-	-	-	-	-	-	-	-	-	-	-	-	-	-	-	-	-	-	
								$	-	-	-	-	-	-	-	-	-	-	-	-	-	-	-	-	-	-	-	-	-	-	-	-	-
							-	FTEs	0.000	0.000	0.000	0.000	0.000	0.000	0.000	0.000	0.000	0.000	0.000	0.000	0.000	0.000	0.000	0.000	0.000	0.000	0.000	0.000	0.000	0.000	0.000	0.000	
								Hrs	-	-	-	-	-	-	-	-	-	-	-	-	-	-	-	-	-	-	-	-	-	-	-	-	
								$	-	-	-	-	-	-	-	-	-	-	-	-	-	-	-	-	-	-	-	-	-	-	-	-	-
							-	FTEs	0.000	0.000	0.000	0.000	0.000	0.000	0.000	0.000	0.000	0.000	0.000	0.000	0.000	0.000	0.000	0.000	0.000	0.000	0.000	0.000	0.000	0.000	0.000	0.000	
								Hrs	-	-	-	-	-	-	-	-	-	-	-	-	-	-	-	-	-	-	-	-	-	-	-	-	
								$	-	-	-	-	-	-	-	-	-	-	-	-	-	-	-	-	-	-	-	-	-	-	-	-	-
							-	FTEs	0.000	0.000	0.000	0.000	0.000	0.000	0.000	0.000	0.000	0.000	0.000	0.000	0.000	0.000	0.000	0.000	0.000	0.000	0.000	0.000	0.000	0.000	0.000	0.000	
								Hrs	-	-	-	-	-	-	-	-	-	-	-	-	-	-	-	-	-	-	-	-	-	-	-	-	
								$	-	-	-	-	-	-	-	-	-	-	-	-	-	-	-	-	-	-	-	-	-	-	-	-	-
							-	FTEs	0.000	0.000	0.000	0.000	0.000	0.000	0.000	0.000	0.000	0.000	0.000	0.000	0.000	0.000	0.000	0.000	0.000	0.000	0.000	0.000	0.000	0.000	0.000	0.000	
								Hrs	-	-	-	-	-	-	-	-	-	-	-	-	-	-	-	-	-	-	-	-	-	-	-	-	
								$	-	-	-	-	-	-	-	-	-	-	-	-	-	-	-	-	-	-	-	-	-	-	-	-	-
							-	FTEs	0.000	0.000	0.000	0.000	0.000	0.000	0.000	0.000	0.000	0.000	0.000	0.000	0.000	0.000	0.000	0.000	0.000	0.000	0.000	0.000	0.000	0.000	0.000	0.000	
								Hrs	-	-	-	-	-	-	-	-	-	-	-	-	-	-	-	-	-	-	-	-	-	-	-	-	
								$	-	-	-	-	-	-	-	-	-	-	-	-	-	-	-	-	-	-	-	-	-	-	-	-	-
							-	FTEs	0.000	0.000	0.000	0.000	0.000	0.000	0.000	0.000	0.000	0.000	0.000	0.000	0.000	0.000	0.000	0.000	0.000	0.000	0.000	0.000	0.000	0.000	0.000	0.000	
								Hrs	-	-	-	-	-	-	-	-	-	-	-	-	-	-	-	-	-	-	-	-	-	-	-	-	
								$	-	-	-	-	-	-	-	-	-	-	-	-	-	-	-	-	-	-	-	-	-	-	-	-	-
Unallocated				1,199,000																													

Attachment E

Monthly Accounting Tracking Tool (MATT) Example

FY07 Engineering Technolgy Profile Summary Report: PFN: 321-2007-001

(Show 6-months of Data)

Date Thru	Cummulative PV ($K)	Cummulative AC ($K)	Cummulative EV ($K)	CV ($K) (EV-AC)	CPI (EV/AC)	SV ($K) (EV-PV)	SPI (EV/PV)
24-Jan-09	1484	1478	1472	-6	1.00	-12	0.99
27-Dec-08	1465	1465	1472	7	1.00	7	1.00
29-Nov-08	1600	1436	1330	-106	0.93	-270	0.83
Oct 25,2008	1465	1377	1271	-106	0.92	-194	0.87
Sep 27,2008	1354	1327	1252	-75	0.94	-102	0.92
Aug 30,2008	1314	1314	1232	-82	0.94	-82	0.94

CPI:SPI Color Key

>0.90

0.85-0.90

<0.85

PM: Matt Mlekush

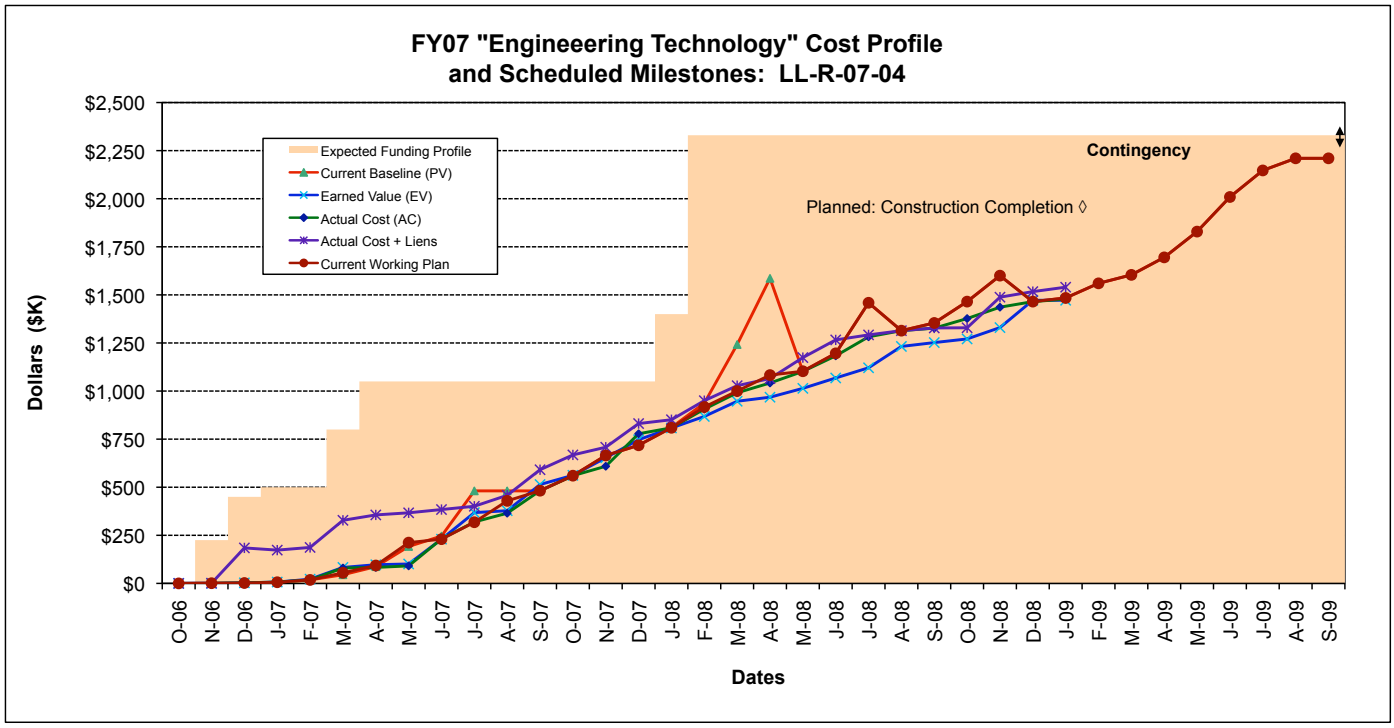

Project Start: 11/15/06	**Project End**: 10/30/08
Actual Start: 11/18/06	**Act. Proj. End**: TBD
Project Budget w/Contingency ($K)	$2,330
Authorized Funding to Date ($k):	$2,330
Budget At Completion (BAC) ($k):	$2,210
Actual Cost (AC) to Date ($k):	$1,478
Estimate To Complete (ETC) ($k):	$732
Estimate At Completion (EAC) ($k): (AC+ETC)	$2,210
Remaining Budget ($k): (BAC-AC)	$732
Variance At Completion ($k): (BAC-EAC)	$0
Contingency Budget ($k):	$120
Unconstrained Contingency Remaining ($k):	$120
Calculated Risked Based Contingency ($k):	$159
Mgmt. Reserve Available for Recapture ($k): (Negotiated Each Month with Program Lead or PD Lead)	**$0**

Briefly Define Project Scope: (Total DM: $1,396,734)

FY07 Construction
* B-321: Replace two Motor Control Centers
* B-131: Replace High Bay, Room 1400 HEPA

FY08 Construction
* B-321: Replace Unit Substation
* B-321: Replace Air Handling Units, Fans & Pumps
* B-321: Replace Feeder Cables from Unit Sub to distribution loads
* B-321: Replace remaining two Motor Control Centers

What Project Concerns Keeps You Up At Night?
*Transformer size will increase from 1500 KVA to 2000KVA due to B-321C consolidation efforts. Will adveresly impact both cost and schedule.

Cell contains formula, do not overwrite Cell to be updated each month by PM

Cost Performance Index Detail: **1.00**

Cost Performance Recovery Plan:

Schedule Performance Index Detail: **0.99**

Schedule Performance Recovery Plan:

Attachment F

D&D Protocols

D&D Team
Standardized Equipment & Material Release Protocols

Releasing equipment and material from offices, laboratories, transportainers, storage areas and construction or demolition sites requires coordination and concise communication between all participants.

The following criteria apply to all D&D activities involving personal property/material release:

a) Material and equipment removed from D&D project areas will be labeled/color coded.

b) Labels bearing the D&D logo with either a red, blue or green D&D logo will be used for individual items or containers of items. Red, blue or green spray paint will be used to identify large bulky items, usually originating from demolition projects.

c) Color-coded items should be segregated to maintain positive control.

d) Attaching pictures/diagrams to release documentation is encouraged but is not required for releasing equipment or items.

e) Survey and documentation requirements depend on the perceived, real or expected hazards associated with a given project. The Protocol Level will be assigned at the beginning of the project.

A color code will be utilized as follows to communicate the status or level of concern for equipment undergoing release:

Colored labels or paint should be applied to be easily visible.

When changing the color code on an item, the previous color should be completely covered by the new color, or painted over with black. Green and Blue color can be applicable only after release memorandum or e-mail is received from the EA.

The color code follows the format detailed below:

Red — A red label or paint will be used to identify items that cannot be free-released or items that are not to be moved from their project area.

Green — A green label or paint indicates the item(s) can be released unconditionally to the equipment end point destination (re-use, DUS, scrap, etc.).

Blue — A blue label or paint will be applied on materials identified as controlled disposal to the Municipal Landfill (non-recyclables)

Black — The color black is used to obscure previously applied colors and also used to write comments.

Roles, Responsibilities, and Authorities

Project Responsible Individual:

In conjunction with the ES&H disciplines, establishes project Protocol Level.
Informs all project participants of the selected Protocol Level and posts the procedure at the worksite.
In conjunction with the ES&H disciplines approves changes in Protocol Level or modifications to the specific project use of the selected Protocol.
Obtain and control official release memos.

Project Assigned D&D Health & Safety Technician:

In conjunction with the EA and HP is Responsible for releasing equipment and material from all D&D-controlled project areas.

Project Assigned D&D RHWM Technician:

Accountable for all hazardous waste manifesting, documentation, shipping

Project Assigned D&D Laborer:

Responsible for loading and transporting materials to DUS, municipal landfill, and other laboratory locations as directed by the Responsible Individual.
The Project Assigned D&D Laborer is also responsible for coordinating the Sunflower reports for non-hazardous materials.

Description of Protocols

Regardless of equipment end point destination—reuse, recycling, or disposal—the following protocols apply to all equipment and material released or transferred from D&D projects. Four different Protocol Levels have been defined:

1) Examples of Level One projects includes transportainer clean outs, ventilation system dismantlement where contamination is possible, and laboratory reconfigurations involving known contamination.
2) Level Two applies primarily to radioactive material management areas (RMMAs).
3) Examples of Level Three projects include clean out of low level radioactive material area (RMA) laboratories, rooms/lockers where only sealed radioactive sources were stored, offices adjacent to RMMAs or non-rad laboratories, and removal of uncontaminated construction debris from demolition projects.
4) Examples of Level Four projects include clean out or migrations of offices, conference rooms, or non-hazardous storerooms.

Level One Release Protocol

A Level One Release Protocol is the highest level of concern and applies to large or small projects that involve:

Known or expected hazardous and/or radioactive materials that could pose an immediate hazard to personnel;

Items/areas for which insufficient historical documentation exists; and

Jobs that require a database or inventory to keep track of the large number of items generated and sampled or surveyed.

Required surveys and documentation:

Documented radiation dose rate surveys of the object(s) or container(s), as applicable.

Documented direct surface contamination surveys (HP/IH) of the object(s) or container(s), as applicable.

Documented contamination swipe surveys (HP/IH/EA) of the object(s) or container(s), as applicable.

Inventory list or database of equipment or material where sample tracking is required.

Completed Equipment/Property Release Form for each item or list of related items, other than waste, that will be moved to new location.

Controls:

Materials and equipment shall be segregated prior to loading by color code identification.

A D&D H&S Technician (or RI-approved alternate) must verify proper color- coding on all materials removed for disposal as they are being loaded.

Where a release memo is issued specifying items or equipment to be released, and the memo specifies the item by a unique number, a copy of the memo will be used to check off each item as it is being loaded. The checked off memo will be forwarded to the EA.

Level Two Release Protocol

A Level Two Release Protocol is the second highest level of concern and applies primarily to radioactive material management areas (RMMAs), and laboratories/projects where:

There are known or expected hazardous and/or radioactive materials that could pose an immediate hazard to personnel, and sufficient historical documentation exists.

Required surveys and documentation:

Documented direct surface contamination surveys (HP/IH) of the object(s) or container(s), as applicable.

Documented contamination swipe surveys (HP/IH/EA) of the object(s) or container(s), as applicable.

Completed Equipment/Property Release Form for each item (or container of related items), other than waste, that will be moved to new location.

Controls:

Materials and equipment should be segregated by color code prior to loading. A D&D H&S Technician (or RI-approved alternate) must verify proper color-coding on all materials removed for disposal as they are being loaded.

Level Three Release Protocol

A Level Three Release Protocol applies primarily to large or small projects in non-RMMA spaces that involve:

Few or no hazardous and/or radioactive materials that could pose an immediate hazard to personnel, and sufficient historical documentation exists.

Required surveys and documentation:

Informal direct surface contamination surveys (HP/IH) of the object(s) or container(s), as applicable.

Informal radioactive contamination (large area) wipe-surveys of the object(s) or container(s), as applicable.

IH metals swipes, per IH direction.

Note: If completed Equipment/Property Release Forms are required for any item, the abovementioned surveys must be documented.

Controls:

If unexpected contamination levels or amounts of hazardous materials are discovered, the RI will reevaluate the release protocol level.

Materials and equipment should be segregated by color code prior to loading.

A D&D H&S Technician (or RI-approved alternate) must verify proper color- coding on all materials removed for disposal as they are being loaded.

Level Four Release Protocol

A Level Four Release Protocol applies to projects in non-hazardous spaces that involve:

No known or expected hazardous and/or radioactive materials that could pose an immediate hazard to personnel; and

Sufficient historical documentation exists.

Required surveys and documentation:

Informal direct surface contamination surveys (HP/IH) of the object(s) or container(s), as applicable.

Informal radioactive contamination (large area) wipe-surveys of the object(s) or container(s), as applicable.

Green D&D label or sign posted at the entrance to the room indicates all unlabeled items in the room may be moved to the new location.

Red D&D label on items that are not to be moved.

Controls:

If unexpected contamination levels or amounts of hazardous materials are discovered, the RI will reevaluate the release protocol level.

The D&D H&S Technician will identify items that are not to be removed to the D&D co-workers prior to starting the move.

Property Relocation Requirements

The following steps apply to all projects regardless of Protocol Level:

1. The Project RI obtains a Sunflower Report sorted by building/trailer and room # just prior to demolition or room clean out. The web address is:

   (https://www-ais.llnl.gov/llnl_only/docs/bsd/property/reports.html)

2. On the day that the relocation begins, the Lead Laborer verifies status of property on report:

   Verify items on list actually located in room (with a check next to the property #)
   Record those items in room, not on list (Property # Only)
   Mark items on list not located in room (with a N/H)

3. The Client determines whether property will:

   Move to the new location (Bldg & Rm#) or
   Be released for disposal or
   Stay in room

4. The Lead Laborer records the end point status on the Sunflower Report.

5 If going to DUS, D&D will complete the Excess Equipment Form (LL6348) and have the responsible Property Center sign off on the form. A copy will go to the Property Center and be retained with the project file.

6. If property is moving to a new location, record new Building and Room # on Sunflower Report.

7. The Lead Laborer will obtain a signature from the Client on all release documents.

8. The project assigned D&D H&S Technician will approve the equipment release.

9. Once all notations have been placed on the Sunflower Report a copy will be sent to the Property Representative and the original will be filed in the project file.

10. Property SHALL NOT be moved until the property release form is signed by all parties and permission to disposition the property is given by the property representative.

Releasing Non-Hazardous Waste from D&D-owned WAAs for Disposal or Recycling

1. D&D Technicians request a signed Release Memo for numerous or complex groups of items or an email for a relatively small number of items from the D&D EA, with concurrence from the ES&H Team IH and/or HP, for waste items released for disposal or recycle.
2. The EA forwards a Release Memo with identification numbers or unique visual identification information for each release item to the D&D Technicians.
3. D&D Technicians will sort materials identified in the release memo into a segregated area separated from the remaining non-released materials.
4. D&D Technicians will verify that each sorted item is identified on the signed current release memo.
5. D&D H&S Technicians will physically mark the waste identified for release as follows:

   For DUS, mark with green code (without obscuring the identification number) and attach the Equipment/Property Release Form.

   For controlled municipal landfill, completely mark out the previous color code and apply a blue color code (without obscuring the identification number).

   For unrestricted municipal landfill or recycling, completely mark out the previous color code and apply a green color code (without obscuring the identification number).
6. As the items are loaded on the truck for transport, a D&D H&S Technician will perform the following final check:

   Compare and verify each identification number to the Release Memo, and

   Ensure that items loaded on the truck are correctly color-coded for the transport, and verify that hazardous material labels (i.e., radiation stickers, beryllium contamination labels, etc.) have been obliterated or otherwise removed.
7. The initialed Release Memo is returned to the Project RI.

Attachment G

Sample Plan for Waste Characterization

FY09 Trailer Demo Sampling Plan

Discipline	Purpose	Building Component (sheetrock, floor tile, fume hood etc...)	Location	Sampling Method	Sampling Tech (RHWM or H&S or Contractor)	Analytical Method	Analysis Turn Around Time	Estimated # of samples	Estimated Cost	Responsible Lab (RML, CES, ALAB, Contractor)	Additional Comments	Status/Analytical Result
EA	Characterize Siding	Wood Siding	213	Core (Bulk) Sample	RHWM Sample Team	GAB, H3, TTLC, STLC, TCLP	6 weeks	2 (location TBD)	$650 per sample plus sample team time (6-8 hours)	Off-site		
EA	To Determine Disposition	Excavated and/or Potholed Soil	213	Composite Bulk Sample	ESPD Tech	GAB, H3, TTLC, STLC, TCLP	6 weeks	1	$650 per sample plus ESPD Tech time (2 hours)	EMRL		
EA	Characterize for Disposal	Roof	213	Bulk Sample	RHWM Sample Team	GAB, H3, TTLC, STLC, TCLP	6 weeks	1	$650 per sample plus sample team time (4-6 hours)	Off-site	This building was constructed in 1964, if the original roof material is present, we need to sample.	
IH	Site wide asbestos confirmation	Ceiling tiles, tile/sheet flooring/mastic, wallboard, joint compound, roofing, roofing mastic, pipe insulation, and other suspect materials	213	Bulk Sample	Qualified Asbestos Inspector	Asbestos	5-7 days	25	$25/sample	Microanalytical	Refer to Master Facility Asbestos Sampling Report	
EA/HP	Characterize for Disposal	P-trap (Janitor's Sink)	213, Room 100C	Direct a/b survey and tab swipes of p-trap interior	H&S Tech	GABT	2-3 days	1	N/A	RML		
HP	Characterize for Disposal	Flooring	1401	Survey	H&S Tech	Direct a/b Survey	Immediate	1 per entrance/exit	N/A	N/A		
IH	Site wide asbestos confirmation	Ceiling tiles, tile/sheet flooring/mastic, wallboard, joint compound, roofing, roofing mastic, pipe insulation, and other suspect materials	1401	Bulk Sample	Qualified Asbestos Inspector	Asbestos	5-7 days	25	$25/sample	Microanalytical	Refer to Master Facility Asbestos Sampling Report	

FY09 Trailer Demo Sampling Plan

Discipline	Purpose	Building Component (sheetrock, floor tile, fume hood etc...)	Location	Sampling Method	Sampling Tech (RHWM or H&S or Contractor)	Analytical Method	Analysis Turn Around Time	Estimated # of samples	Estimated Cost	Responsible Lab (RML, CES, ALAB, Contractor)	Additional Comments	Status/Analytical Result

conditional sampling requested by EA
Samples not taken
Samples Taken waiting for analysis
Okay for scrap/reuse
Releasable for landfill
Results show this must be managed as haz or rad waste
Not required based on historical information

Attachment H

D&D Generic Standard Operating Procedures

H-1: Removal of Potentially Contaminated/Contaminated Ventilation Systems, Piping, and Associated Equipment

H-2: Removal of Potentially Contaminated/Hazardous Above-Grade Pipe

H-3: Removal of Potentially Contaminated/Hazardous Below-Grade Pipe

H-4: Removal of Potentially Contaminated Box-Type HEPA Filters

H-5: Dismantling and Removal or Maintenance of a Ventilation System Contaminated with Perchlorates

H-6: Vacuum Pump Disposition

NOTE: THE FOLLOWING GENERIC SOPs ARE TO BE FOLLOWED AS GUIDELINES. THE SOPs ARE TO BE CUSTOMIZED FOR EACH SPECIFC PROJECT.

ATTACHMENT H-1

REMOVAL OF POTENTIALLY CONTAMINATED/CONTAMINATED VENTILATION SYSTEMS, DUCTING, PIPING, AND ASSOCIATED EQUIPMENT

NOTE: This is the generic version of the SOP. This SOP should be reviewed and modified, as needed, for each specific project.

1.0 Reason For Issue

This SOP provides the necessary controls for the removal of potentially contaminated/contaminated ventilation system ducting, piping, and associated equipment (e.g., fans, damper valves and manifolds) located in facilities undergoing deactivation, decontamination, decommissioning, or demolition (D&D) activities. D&D activities involving ventilation system components are not currently covered by an active Facility Safety Plan (FSP) and are not explicitly controlled by other health and safety documentation. For the purpose of this SOP, these systems will be generically referred to as "components."

2.0 Work to be Done and Location of the Activity

2.1 Work to be Done

This safety plan is limited to ventilation system component removal efforts being performed by D&D personnel in buildings or facilities undergoing sanctioned D&D activities. Ventilation system component removal efforts generally entail:

- Identifying which specific components of a system will be removed;
- Performing hazard analyses based on current and historical system use and sample/survey results as stipulated by the appropriate D&D and ES&H Disciplines;
- Cutting and/or disassembling of ventilation system components to allow for additional characterization and removal;
- Storing ventilation components on an interim basis in a controlled lay-down area to allow for final characterization, analysis and review, size-reduction, and preparation for disposal; and
- Disposing of ventilation components in the most appropriate manner (e.g., reuse, storage, excess, scrap, hazardous waste and/or radioactive waste).

2.2 Location

Throughout the Laboratory main site (Site 200), Site 300 and Offsite (as reviewed, approved and authorized through an IWS) in support of D&D field operations.

3.0 Scope of Work to be Done

The scope of work involves the removal of potentially contaminated/contaminated ventilation systems, ducting, piping, and associated equipment removed from a facility during a D&D project.

4.0 Hazards Analysis & Controls

4.1 General hazards

General industrial hazards encountered during ventilation system component removal activities include:

- Working at elevated heights (i.e., greater than 6 feet high);
- Typical cutting and disassembly risks from falling components, debris and/or flying objects;
- Hazardous materials (e.g., asbestos, lead) that may be part of the ventilation construction and coating, insulation materials, or surrounding materials (e.g., walls, ceilings, concrete floors, solder joints and shavings);
- Inadvertent separation of ventilation components due to old age, insufficient support, or shifting due to unanticipated load balance changes;
- Littered and/or congested walking and working areas;
- Slips, trips, and falls;
- Cuts, bruises, & pinches;
- Potential confined spaces;
- Heat stress; and
- Fire.

Ventilation systems may be contaminated with hazardous and/or radioactive materials. Concentration of such materials is especially likely in exhaust system components (e.g., fans, damper valves and manifolds, high velocity turbulent zoned ducting bends and transition pieces). Removal of these components may involve the potential for worker exposure to:

- Acids (such as perchloric and nitric);
- Mercury (liquids and vapors) and skin contact where mercury can pass through the skin;
- Residual amounts of unanticipated chemicals/hazardous materials/high explosives located in previously inaccessible areas.
- Residual amounts of alpha, beta and gamma emitting radioactive materials;
- Residual amounts of other unspecified toxic materials (e.g., inorganic or organic substances);
- Biohazards;
- Unknown materials; and/or
- Disintegrated filters carrying hazardous media.

The potential loss of containment of loose radioactive contamination, residual explosive materials, and/or hazardous material inside ventilation system components could result in worker exposure or injury and environmental contamination from release of material to the ground or surrounding structures/areas.

The following controls will reduce the risk of general hazards:

4.1.1 The removal of ventilation systems shall be specified in the project specific IWS.

a. The history (maintenance, use, etc.) of each ventilation system shall be reviewed by the RI and ES&H Disciplines during the IWS review cycle.

b. The RI and ES&H Disciplines shall assess the current condition of potentially contaminated ventilation systems prior to the start of component removal. As a minimum, the following inspections shall be performed:

- Observe the area immediately underneath and about the ventilation system for discoloration or unnatural sediments or smell.
- Inspect the ventilation system for obvious damage.
- Survey the system components with an E-120, Blue Alpha Meter, organic vapor meter and mercury sniffer (and/or other instruments, as specified by the D&D and ES&H Disciplines).
- Evaluate the system for fatigue and integrity.

4.1.2 When there is insufficient ventilation system history or survey information, pre-disassembly sampling and surveys of internal surfaces may be performed (per EA/HP/IH/PM judgment) to confirm current contamination conditions (types and quantities) so that appropriate safety controls and sampling requirements may be established.

4.1.3 Based on the ventilation system history and current conditions, the ES&H Team Disciplines shall assign a level of contamination-specific controls required (e.g., none, low-level, or high-level). Control levels may be summarized as:

- No contamination involved. Process-specific contamination controls are not required. The D&D team may proceed utilizing standard, approved industrial safety controls.

- Potential or Low-Level Contamination. Ventilation system removal shall require the use of the contamination control procedure described in this SOP.

- High-Level Contamination. A dedicated SP shall be generated whenever the degree of contamination is determined to be high-level.

4.1.4 In the event that a ventilation system is determined to be or is discovered to be contaminated with perchlorates or other materials, which are potentially explosive, all work on the system shall STOP immediately and an Explosive

Safety Engineer notified. An evaluation to determine if the SOP for ventilation systems contaminated with perchlorates should be used instead.

4.1.5 The minimum Personnel Protective Equipment (PPE) requirements specified herein shall be confirmed as adequate or augmented by the ES&H Team Disciplines in the job-specific safety documentation [IWS and/or associated hazard assessment and control document, SP, etc.].

The minimum PPE requirements for workers cutting, removing and handling potentially contaminated or low-level contaminated ventilation system ducting, piping or components is as follows:

- Leather/heavy gloves over high-grade Latex®-free (or equivalent) gloves
- Safety shoes or stout work boots
- Shoe covers
- Safety glasses with side shields (when using a half-mask respirator)
- Tyvek®(or approved alternative), Laboratory issue coveralls, or lab coat
- Half-mask respirator (minimum)
- Hood (or equivalent)
- Face-shield, when mechanical cutting of ventilation components is necessary
- Hard-hat

  NOTE: The hard-hat requirement may be waived with written approval from the ES&H Team Industrial Safety Engineer.

4.1.6 All Asbestos Containing Materials (ACMs) shall be abated under the auspices of an Asbestos Work Permit approved by the Industrial Hygienist and within the time frame and specified abatement method outlined in the BAAQMD or SJVUAPCD asbestos notification.

4.1.7 The preferred method of ventilation system disassembly is from the influent (hood or intake plenum) to the effluent (fan exhaust or stack), with continuous exhaust flow (i.e., system negative pressure) as the system is being dismantled.

a. The exhaust flow should be maintained on the ventilation system only as long as safe and practical during the disassembly process. The ES&H Team Disciplines shall determine what constitutes safe and practical exhaust flow operations during system disassembly on a case-by case basis.

4.1.8 Whenever disassembling contaminated or potentially contaminated systems or components where the potential for the dispersal of wind-borne particulate

contamination is possible, a temporary enclosure should be erected. The need for and type of the enclosure will be determined on a case-by-case basis.

a. The temporary enclosure shall be equipped with a HEPA-filtered exhaust ventilation system. The exhaust ventilation system shall have sufficient volumetric airflow to create and maintain a pressure differential greater than or equal to -0.02 inches of water within the enclosure, when measured with respect to the area outside the enclosure.

b. A calibrated recording pressure monitor shall be used to monitor the pressure differential between the enclosure and the outside. The monitor shall be equipped with an alarm set to trigger whenever the pressure differential falls below -0.02 inches of water.

   NOTE: If alarm sounds, work is to STOP until the source of the alarm can be identified and remediated.

c. Each time the pressure differential falls below -0.02 inches of water, the RI, or designee, shall annotate the pressure monitor's record with the reason for the loss of pressure, and initial the annotation.

d. Pressure records shall be collected on a weekly basis. A photocopy of the record shall be forwarded to the ES&H Team Industrial Hygienist for review. The original record shall be maintained as part of the operational log.

e. Each day this work is performed, the function of the pressure monitor shall be checked by the workers with a Magnahelic gauge or incline manometer before the start of work. The monitor should be allowed to alarm at its pre-selected setpoint (e.g., -0.02 inches of water). The Magnahelic or manometer should be used to verify the "calibration" at that setpoint. If the monitor does not perform as expected, work shall not commence until a properly functioning pressure monitor is installed.

f. When there is potential for radioactive airborne contamination, a continuous air monitor (CAM) shall be used, per the ES&H Team Health Physicist's discretion, to provide immediate warning to the workers of radioactive airborne conditions.

   NOTE: When a CAM alarms, workers shall immediately stop work, exit the area or retreat to a pre-determined holding area, and notify the Health & Safety Technician.

4.1.9 The following equipment and materials are typically needed for ventilation system removal tasks and should be readily available during removal activities:

- Appropriate hand tools (e.g., wrenches, breaker bars and hand-held power saws)
- Sheet plastic/Herculite® and/or heavy gage paper sheeting

- Plastic bags (for sealing pipe and/or ducting ends, fan inlet and outlet plenums, valve flanges or other component openings)
- Tape
- Indelible ink pen (to identify ventilation system components or parts)
- Wipes (for decontamination and/or surveys)
- Mercury HEPA-filtered vacuum (when mercury is suspected)
- Mercury spill kit (when mercury is suspected)
- Absorbent material
- Plastic waste bags and containers
- Radiological monitoring equipment, as appropriate (e.g., two Micro R meters, Blue Alpha meters, E-120 meters with pancake probes.)
- Mercury Sniffer
- Organic Vapor Meter/Photo-Ionization Detector
- Other appropriate survey instruments
- pH paper
- Methylene Blue (Perchlorate detection)
- Three quarter-inch thick plywood or fitted sheet metal ventilation penetration covers
- Glassine bags and swipe tabs (as needed)
- Contaminated waste receptacle(s) (segregated for RAD and NON-RAD, as appropriate)
- Appropriate radiation/contamination labels
- Enclosure with HEPA-filtered exhaust fan and negative pressure monitor (as required by the D&D AND ES&H Disciplines)
- CAM (as required by the Health Physicist)
- Spare PPE (e.g., gloves, shoe covers, and Tyvek®)

4.1.10 A controlled work area shall be clearly established to prevent the migration of contaminants from the work site whenever cutting and removing potentially contaminated or contaminated ventilation system components.

4.1.11 Where materials and ventilation system components are being raised and lowered to the ground from an elevation (e.g., a roof or platform); an exclusion area shall

be established at grade level to preclude the inadvertent access of unauthorized personnel.

The following controls shall be employed, per ES&H Team confirmation in the IWS/safety documentation, for removing low-level potentially contaminated ventilation systems. These controls may be upgraded by the ES&H Team during IWS review or removal operations as contamination conditions warrant.

Planning Period

4.1.12 A ventilation system-specific disassembly plan shall be completed prior to prestart and approval to proceed.

a. The typical plan will include:

- sequence of disassembly
- numbering plan
- starting point/end point
- Lockout & Tagout (LOTO)
- survey & test points
- methodology (e.g., cutting, unbolting)
- non essential equipment removal (e.g. shrouds, pulleys, electrical motors)

b. The intended separation areas and component removal order shall be reviewed by the Industrial Safety Engineer to ensure adequate support is planned for the changing load balances.

NOTE: As is practical, heavy components such as fans and damper valves should be separated from ducting or piping runs prior to their disassembly.

NOTE: Wherever practical, the components shall be disassembled at existing joints versus being cut. In situations where ducting and piping runs are extensive, saw cutting may be considered.

EXAMPLE: HOOD DISASSEMBLY NUMBERING PLAN

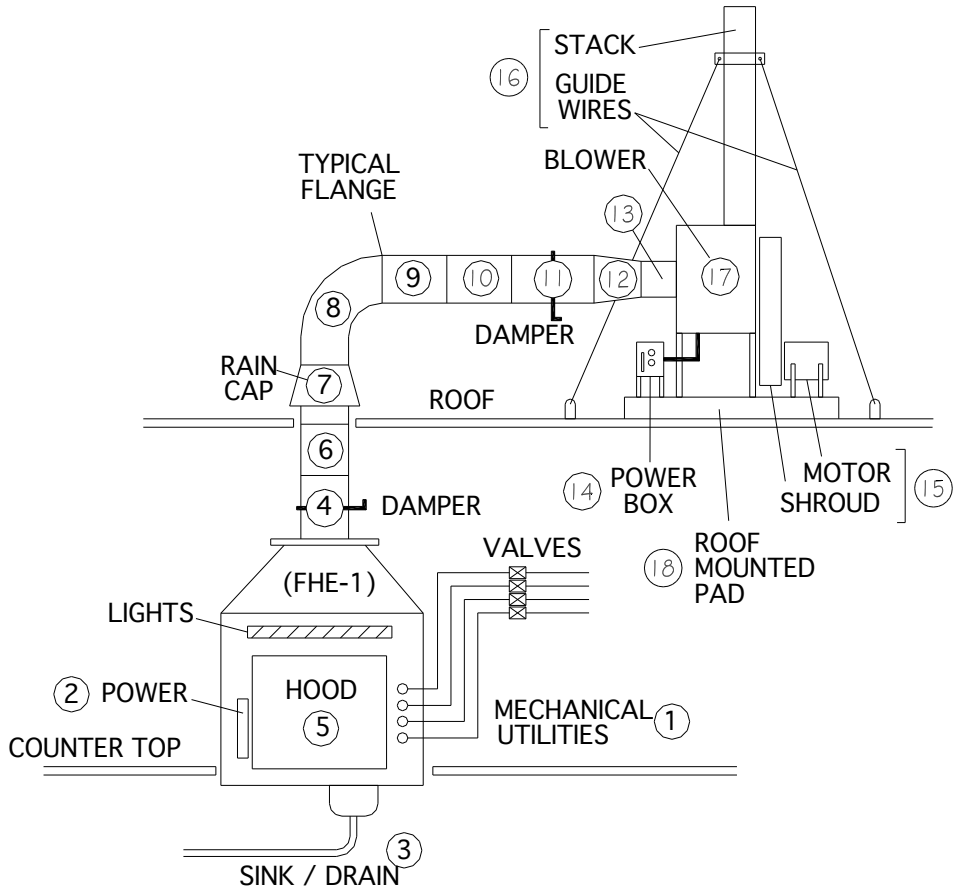

BLDG. X Y Z -FHE 1

#	ITEM
Z-1-1	INTERIOR UTILITIES
Z-1-2	INTERIOR POWER
Z-1-3	DRAIN
Z-1-4	INTERIOR DAMPER
Z-1-5	HOOD
Z-1-6	INTERIOR DUCT
Z-1-7/-13	EXT. DUCT REMOVAL
Z-1-8	EXT. ELBOW DUCT
Z-1-9	EXT. BLOWER DUCT
Z-1-10	EXT. BLOWER DUCT
Z-1-11	EXTERIOR DAMPER
Z-1-12	EXT. BLOWER DUCT
Z-1-14	EXTERIOR POWER
Z-1-15	MOTOR / SHROUD
Z-1-16	GUIDE WIRES / STACK
Z-1-17	BLOWER
Z-1-18	PAD

TYPICAL HOOD DISASSEMBLY

4.1.13 In situations where there is NO likelihood for the spread of particulate contamination (e.g., radioactive materials, Beryllium, lead); the H&S Technician shall assure that the work areas have adequate ventilation (e.g., doors and windows opened or cracked open).

4.1.14 Whenever working within a room or area on ventilation systems above chest height, temporary scaffolding shall be employed to provide a steady platform for workers to perform separation activities.

4.1.15 Whenever working within 6 feet of the edge of an elevation that is greater than 6 feet high (e.g., a roof or platform edge), fall protection shall be utilized as specified by the ES&H Team Industrial Safety Engineer.

Set Up Period

4.1.16 Establish an interim lay-down area to stage the ventilation system components for subsequent transfer to the waste area. The lay-down area(s) shall be controlled to mitigate the spread of contamination.

CAUTION: Sheet plastic can be a slip hazard, especially when wet. In situations where sheet plastic could result in a significant slip hazard, a heavy gage paper sheeting, or a Herculite® sheet shall be utilized. (Fire resistant plastic shall be used.)

4.1.17 Install dunnage, as approved by the ES&H Team Industrial Safety Engineer in the job-specific ventilation disassembly plan.

Execution Period

NOTE: Prior to initiating any activities, the PM shall conduct a prestart meeting, review the IWS and/or job specific safety documentation, disassembly plan, and request permission to proceed.

4.1.18 Clear all equipment and non-structural components from the immediate area of the ventilation system to be removed such that it is clearly visible and easily accessible.

4.1.19 Prior to initiating disassembly, the H&S Technician shall survey the intended separation area with a Micro R or E-120 (or equivalent) meter so that cuts are made in areas of lesser radioactive content.

NOTE: In places where the accumulation of contaminants may be significant (or pure alpha emitters may be present, a pilot hole may be drilled into the ventilation system and the drill bit checked for contaminants. (This action requires prior ES&H review & approval.)

4.1.20 DO NOT heat ducts, pipes or components during separation activities. If torch cutting or similar operations are needed, further hazards review is required. Notify the ES&H Team Disciplines.

4.1.21 Start disassembly or saw cutting until the ventilation system segment is separated enough to perform an initial inspection for contaminants. The H&S Technician shall access the separation to perform, at a minimum:

- a radiological direct survey;
- a radiological contamination check; and
- a pH test using litmus paper.

CAUTION: Under no circumstance are any of the workers to place their hands or other body parts in a position where there is a danger of being injured by a sharp piece of metal or slipping load.

CAUTION: If radiological contamination levels greater than ten times those anticipated in the IWS/HA are encountered, or unanticipated radiation types or material forms are found, **STOP WORK** immediately and notify the Hazards Control Health Physicist.

CAUTION: Be watchful for signs of crystals or "frosted" materials that are indicative of perchlorates or other explosives material. If observed, **STOP WORK** immediately and call the Explosives Safety Engineer for a thorough evaluation. See section 4.1.4,

CAUTION: Be prepared for breakage or inadvertent separation due to failure caused by old age, insufficient support, shifting due to unanticipated load balance changes.

4.1.22 Survey the immediate area of the pipe separation for radioactive and/or hazardous materials (as appropriate). If contaminated, clean all potentially contaminated residues adhering to the tools or saw.

4.1.23 The H&S Technician shall perform periodic personnel surveys for radioactivity (as appropriate) and shall survey and/or visually check for other suspect contaminants.

4.1.24 The RHWM Sampling Technician shall acquire duct, pipe or component interior samples under the direction of the ES&H Team EA as necessary for proper characterization and disposal.

NOTE: The H&S Technician may perform characterization sampling for equipment having low potential for process contamination, per the EA discretion and instructions.

4.1.25 Collect any residue that may have been generated in the cutting process. Whenever possible, the RHWM Sampling Technician shall also acquire samples of residual cuttings and/or debris.

4.1.26 Cover the open end(s) of the ventilation system duct, pipe or component with a plastic bag and seal with tape. When appropriate, employ metal or plywood blank flanges and then cover with a plastic bag and seal with tape. The H&S Technician shall verify that no radioactive contamination exists on the exterior plastic sleeve or blank flange via the gross swipe technique.

NOTE: When necessary, clean the item where the tape is to be used to make sure the tape will stick. Treat the cleaning wipes as contaminated waste.

4.1.27 Move the wrapped item from the work area to the designated lay-down area. If necessary, continue to size-reduce and characterize the component segments under the same applicable controlled conditions as stipulated above. The D&D HWM Technician must notify the H&S Technician prior to sampling or size-reducing any staged items.

4.1.28 Once clear, the exposed ventilation penetration (through the roof or platform) will be covered with a three quarter-inch thick plywood secured cover or capped with a fitted sheet metal fixture to protect the facility from rain and employees from an open roof penetration. Such covers will be labeled “hole”.

4.1.29 All equipment/tools shall be visually inspected, surveyed and swiped by the H&S Technician for radioactive and suspected hazardous contamination prior to release from the work area.

4.1.30 All personnel shall perform a whole-body contamination survey prior to leaving the work separation area, as appropriate.

4.1.31 All personnel shall wash hands and face before lunch, breaks, or leaving work.

Post Disassembly & Clean Up

4.1.32 With H&S Technician coverage, workers shall roll the plastic or paper sheet inward to prevent dispersal of any potential loose contaminants and dispose of the roll as waste.

4.1.33 The ventilation system separation area shall be surveyed by the H&S Technician for radioactive and other suspected hazardous contamination, as appropriate, prior to its release for uncontrolled access.

4.1.34 All wastes shall be collected and disposed of in the manner stipulated by the EA.

4.1.35 The removed components shall be marked for disposal with the known and/or potential contaminant type(s) and approximate levels as determined from process knowledge and direct sampling/surveying information.

4.1.36 Contaminated ventilation system components shall be prepared for interim storage by RHWM.

NOTE: Notify the FPOC that these actions are complete. Update the building electrical drawings, Real Property Installed Equipment List, Discipline Action Plan, and other building data files.

5.0 General Hood Removal Procedure

Additional PPE Requirements

5.1 PPE requirements for general hood disassembly and removal activities are the same as those specified in section 4.0.4 of this attachment with the following exception:

- When using a "Sawzall" saw (or similar device) to cut the ducting, the saw operator shall wear either a HEPA-filtered half-mask respirator with safety glasses or goggles *OR* a HEPA-filtered full-face respirator.
- Respirator usage for other general hood disassembly activities will be determined by the ES&H Team Disciplines based on hood contamination conditions.

General Removal Plan

NOTE: Hood removal activities are not to begin until IH and HP pre-start surveys are complete (as determined necessary by the ES&H disciplines). Survey results must be reviewed by the IH and HP and any outstanding issues addressed prior to initiating hood disassembly activities.

NOTE: The following actions do not necessarily need to be performed in chronological order, unless specified in the job-specific IWS or safety documentation.

5.2 Isolate utilities to the hood. Apply Lockout/Tagout Procedure requirements as appropriate.

5.3 Disconnect utilities to the hood.

5.4 Remove both the front and side fascia plates to enable access to the hood's interior upper deck and side areas.

- Perform direct surveys and gross swipes for radiological contaminants of the exposed hood interior areas and inside fascia surfaces as each fascia plate is removed.
- Perform direct surveys for mercury on newly exposed surfaces.
- Inspect interior areas for other potential contamination (e.g., explosives and metals residue).

5.5 Disconnect the fume hood exhaust duct(s) from the hood by either unbolting/unscrewing the flange connection (preferred); or cutting the ducting using a "Sawzall" saw (alternate). When cutting the ducting with a "Sawzall" saw, direct survey (radiological) and gross swipe the saw blade after making the initial penetration cut and after completing the cut.

5.6 Perform direct surveys (radiological and mercury) and gross swipes of the duct interior as soon as the interior ductwork is accessible. Inspect interior areas for other potential contamination.

CAUTION: If unexpected high radiological and/or mercury contamination levels are encountered, STOP WORK and call the Health Physicist and/or Industrial Hygienist as appropriate.

5.7 Pull the hood forward and away from the wall. Survey (radiological and mercury) and gross swipe all newly exposed areas (e.g., back wall, back of hood and floor area). Inspect for other potential contamination (e.g. explosives, metals residue, etc.).

5.8 Perform and document characterization/release surveys and sampling, per ES&H Team Discipline instructions.

5.9 Cap or wrap the open ends of the duct(s) to preclude the potential spread of contaminants.

5.10 Transport the hood to the new location (re-use, DUS, etc.).

5.11 The work area shall be surveyed by the H&S Technicians for radioactive and other suspected hazardous contamination, as appropriate, prior to release for uncontrolled access.

ATTACHMENT H-2

REMOVAL OF POTENTIALLY CONTAMINATED/HAZARDOUS ABOVE-GRADE PIPE

NOTE: This is the generic version of the SOP. This SOP should be reviewed and modified, as needed, for each specific project.

1.0 Reason For Issue

This SOP provides the necessary controls for the removal of potentially contaminated or contaminated pipe located above-grade in facilities undergoing deactivation, decontamination, decommissioning, and demolition (D&D) activities. D&D activities for the removal of above-grade pipes are not currently covered by an active Facility Safety Plan (FSP) and are not explicitly controlled by other health and safety documentation.

2.0 Work to be Done and Location of the Activity

2.1 Work to be Done

This SOP is limited to above-grade pipe removal efforts being performed by D&D personnel in buildings or facilities undergoing sanctioned D&D activities. Typically above-grade pipe removal efforts entail:

- Exposing pipe in preparation for removal;
- Cutting and/or disassembly of pipe-runs into sections for easy removal;
- Interim storage of sectioned pipe in a plastic covered lay-down area for sampling/surveying; and
- Cutting the pipe into short sections to facilitate sampling and disposal.

2.2 Location

Throughout the Laboratory main site (Site 200), Site 300 and Offsite (as reviewed, approved and authorized through an IWS) in support of D&D field operations.

3.0 Scope of Work to be Done

The scope of work involves the removal of Potentially Contaminated/Hazardous Above-Grade Pipe removed from a facility during a D&D project.

4.0 Hazards Analysis & Controls

4.1 General Hazards

General hazards encountered during pipe removal activities include:

- Working at elevated heights (i.e., greater than 6 feet high)
- Typical pipe cutting and disassembly risks from falling components, debris and/or flying objects;
- Hazardous materials (e.g., asbestos and lead) that may be part of the pipe construction and coating, insulation materials, or surrounding materials (e.g., walls, concrete floors, solder joints and shavings).
- Littered and/or congested walking and working areas;
- Slips, trips, and falls;
- Cuts, bruises, & pinches;
- Heat stress; and
- Fire.

Above-grade piping systems (e.g., sewer drains, retention tank drains, and vent lines) may be contaminated with hazardous and/or radioactive materials. Concentration of such materials is especially likely in line bends and traps. Removal of such piping systems may involve the potential for worker exposure to:

- Mercury (liquid or vapors);
- Acids (such as perchlorics and nitric);
- Residual amounts of unanticipated chemicals/hazardous materials/high explosives located in previously inaccessible areas;
- Residual amounts of alpha, beta and gamma emitting radioactive materials;
- Residual amounts of other unspecified toxic materials (e.g., inorganic or organic substances);
- Biohazards; and/or;
- Unknown material.

The potential loss of containment of loose radioactive contamination, residual explosive materials, and/or hazardous material inside piping could result in worker exposure or injury and environmental contamination from release of material to the ground.

The following controls will reduce the risk of general hazards:

4.1.1 The removal of piping systems shall be specified in the project specific IWS.

a. The history (maintenance, use, etc.) of each piping system shall be reviewed by the D&D Responsible Individual and ES&H Team Disciplines during the IWS review cycle.

b. The current condition of the piping systems should be assessed during the IWS development. As a minimum, the following inspections should be performed:

- Observe accessible piping surfaces for discoloration or unnatural sediments or smell.
- Inspect accessible surfaces for obvious damage.
- Survey accessible surfaces and openings with an E-120, Blue Alpha Meter, organic vapor meter and mercury sniffer (and/or other instruments, as specified by the ES&H Team Disciplines).
- Evaluate the system for fatigue and integrity (as practical).

c. Further ES&H review, documentation, and control requirements, as necessary, will be specified by the D&D and ES&H Disciplines as conditions dictate and as systems are exposed.

d. Prior to initiating the removal of above-grade piping systems, the Responsible Individual will ensure all SSCs are properly color-coded. As the building is peeled exposing hidden lines the Responsible Individual shall ensure newly exposed SSCs are properly color-coded to reflect the hazard of the exposed lines.

4.1.2 When there is insufficient system history or survey information, pre-disassembly sampling of internal surfaces may be performed (per EA/HP/IH/PM judgment) to confirm current contamination conditions (types and quantities) so that appropriate safety controls and sampling requirements may be established.

4.1.3 The minimum Personnel Protective Equipment (PPE) requirements specified herein shall be confirmed as adequate or augmented by the ES&H Team Disciplines in the job-specific safety documentation [IWS and/or associated hazard assessment and control document, SP, etc.].

The minimum PPE requirements for workers cutting, removing and handling potentially contaminated or contaminated piping are as follows:

- Leather/heavy gloves over high grade Latex®-free (or approved alternative) gloves
- Safety shoes or stout work boots
- Shoe covers

- Safety glasses with side shields
- Face shields (when there is the reasonable expectation for the release of fluids or when using a hand-held power saw).
- Lab coats, Laboratory issued coveralls, or Tyvek® (or approved alternative)
- Hard-hats

  NOTE: The hard-hat requirement may be waived with written approval from the ES&H Team Industrial Safety Engineer.

4.1.4 The following equipment and materials are typically needed for piping system removal tasks and should be readily available during removal activities:

- Pipe cutter or hand-held power saw
- Sheet plastic/Herculite® and/or heavy gauge paper sheeting
- Plastic bags (for sealing pipe ends)
- Tape
- Indelible ink pen (to identify pipe pieces)
- Wipes (for decontamination and/or surveys)
- HEPA-filtered vacuum, or Mercury HEPA-filtered vacuum, when mercury is suspected
- Mercury spill kit, when Mercury is suspected
- Absorbent material
- Plastic waste bags and containers
- Radiological monitoring equipment, as appropriate (e.g., two Micro R meters, Blue Alpha meters and E-120 meters with pancake probes)
- Mercury Sniffer
- Organic Vapor Meter/Photo-Ionization Detector
- Other appropriate survey instruments
- pH paper
- Methylene Blue (Perchlorate detection)
- Glassine bags and swipe tabs (as needed)
- Contaminated waste receptacle(s) (segregated for RAD and NON-RAD, as needed)

- Appropriate radiation/contamination labels
- Spare PPE (e.g., gloves, shoe covers, and Tyvek®)

4.1.5 Whenever cutting and removing potentially contaminated or contaminated piping, a controlled work area shall be clearly established to prevent the migration of contaminants from the work site.

4.1.6 Establish an interim lay-down area to stage the piping system components for subsequent transfer to the waste area. The lay-down area(s) shall be controlled to mitigate the spread of contamination.

CAUTION: Sheet plastic can be a slip hazard, especially when wet. In situations where sheet plastic could result in a significant slip hazard, a heavy gage paper sheeting, or a Herculite® sheet shall be utilized. (Fire resistant plastic shall be used.)

4.1.7 Whenever working on piping or piping systems suspected of being contaminated with mercury, the H&S Technician shall monitor for mercury vapors whenever there is a potential for personnel exposure (e.g., when checking newly uncovered pipe runs; when making new pipe breaks; and/or releasing equipment, materials or areas).

4.1.8 Whenever working on piping on piping systems suspected of containing or containing large amounts of mercury, contact the ES&H Team Industrial Hygienist for task-specific instructions. The following precautions are recommended:

1. Whenever possible, place a catch basin made of smooth impervious materials (such as plastic or smooth-finish paint), large enough to contain the greatest amount of mercury that could spill and have sufficient dimensions to catch mercury droplets escaping from any plausible direction.
2. Felt mats or horsehair mats can be put on seamless plastic sheets laid in catch pans to catch the droplets from mercury spills. The droplets can then be collected by simply wrapping up the plastic with the mat still inside and disposing of it as mercury waste.
3. Stage the mercury HEPA filtered vacuum cleaner and mercury spill kit for quick deployment to the pipe separation area.
4. Avoid heating pipes that may contain mercury. If torch cutting or similar operations are required, contact the ES&H Team Industrial Hygienist for a task-specific hazard analysis.

   NOTE: Use of a torch is not an option if energetic materials are suspected in the area and / or mercury is suspected in the pipe.
5. Avoid walking on or touching surfaces contaminated with mercury.

6. If a mercury spill can not be cleaned up immediately, establish an exclusion area and post it with CAUTION signs stating, "Mercury Spill Area-Keep Out."

Controls (Procedural)

4.1.9 In situations where there is no likelihood for the spread of particulate contamination (e.g., radioactive materials, Be powders, lead dusts); the H&S Technician shall assure that the work areas have adequate ventilation (i.e., doors and windows opened or cracked open).

4.1.10 Clear all equipment and non-structural components from the immediate area of the pipe such that it is clearly visible. Observe the floor underneath or about the pipe for discoloration, liquids or unnatural sediments. Perform surveillance's (to verify/enhance those performed in step 4.0.1) of the piping to be removed for any obvious damage and survey its length with an E-120, Blue Alpha Meter, organic vapor meter and mercury sniffer (or equivalents, as appropriate).

CAUTION: If unanticipated discoloration, liquids, unnatural sediments or external radioactive or mercury contamination are identified, STOP work on the piping and immediately call the appropriate ES&H Team discipline. The discipline shall review the operation and recommend additional controls and/or PPE (as necessary).

4.1.11 Place plastic sheeting under the pipe section to be separated such that it will collect any residue that may be inside the pipe at the point of separation. The H&S Technician shall survey and inspect the intended pipe separation area so that cuts are made in areas of minimal radioactive/hazardous material content.

CAUTION: Be prepared for pipe breakage or inadvertent pipe separation due to failure caused by old age or the pipe's inability to support its own weight.

4.1.12 Prepare to separate the pipe. **DO NOT** initiate the cut until step 4.1.5 is complete.

a. If using a hydraulic pipe cutter, place the cutter around the pipe and tighten as much as possible without engaging the hydraulic pump on the unit.

b. If using a hand-held pipe cutter, set the cutter over the point of separation without initiating the cut.

c. If using a hand-held power saw, the saw operator shall don a protective face-shield. Any other workers either directly beneath the cut or within 6 feet of the cut shall also don a face shield.

4.1.13 Place an appropriate plastic protective shield over the cutter at the point of separation to minimize aerosol dispersion as directed by the appropriate ES&H Team discipline.

4.1.14 Actuate the pump on the cutter until the pipe is separated. If using a hand-held cutter, start cutter rotation until the pipe is separated.

CAUTION: (1) Be watchful for signs of white or yellow crystals that are indicative of explosive materials. If observed, **STOP** work immediately and call the D&D Explosives Safety Engineer for a thorough evaluation. (2) Avoid heating pipes that may contain mercury.

4.1.15 Survey the immediate area of the pipe separation for radioactive and/or hazardous materials (as appropriate).

4.1.16 Remove the plastic protective shield. Clean all potentially contaminated residues adhering to the saw, pipe cutter and protective shield with cloth or paper wipes.

4.1.17 The HWM Sampling Technician shall acquire pipe interior samples as necessary to adequately characterize the pipe being removed.

CAUTION: If explosive contamination is suspected, contact the Explosive Safety Engineer immediately. Do not continue with the operation until the material has been identified.

NOTE: The H&S Technician may perform characterization sampling for equipment having low potential for process contamination, per the EA discretion and instructions.

4.1.18 Collect any residue that may have been generated in the cutting process. Use absorbent material and plastic bags to clean any wet material exposed as a result of the pipe separation process.

4.1.19 Cover the cut end of the pipe with a plastic bag (or equivalent) and seal the pipe ends (gooseneck) with tape. The H&S Technician shall verify that no contamination is on the exterior plastic sleeve.

NOTE: If necessary, clean a small area of the pipe where the tape is to be used to make sure the tape will stick.

CAUTION: Only clean a portion of pipe that does not contain any external contaminants and can withstand the extra handling without breaking.

4.1.20 Move the wrapped pipe from the work area by hand or mechanical means to the designated lay-down area. If necessary, continue to size-reduce and characterize the pipe segments under the same applicable controlled conditions as stipulated above. The HWM Technician must notify the H&S Technician prior to sampling or size-reducing any bagged piping.

4.1.21 All equipment and tools shall be visually inspected, surveyed and swiped by the H&S Technician for radioactive and suspected hazardous contamination prior to release from the work area.

4.1.22 All personnel shall perform a whole-body contamination survey prior to leaving the work area, as appropriate.

4.1.23 The pipe separation area shall be surveyed by the H&S Technician for radioactive and suspected hazardous contamination, as appropriate, prior to its release for uncontrolled access.

4.1.24 All personnel shall wash hands and face before lunch, breaks, or leaving work.

ATTACHMENT H-3

REMOVAL OF POTENTIALLY CONTAMINATED/HAZARDOUS BELOW-GRADE PIPE

NOTE: This is the generic version of the SOP. This SOP should be reviewed and modified, as needed, for each specific project.

1.0 Reason For Issue

This SOP identifies the hazards and provides the necessary controls for the removal of potentially contaminated hazardous pipe located below-grade in facilities undergoing deactivation, decontamination, decommissioning, and demolition (D&D) activities. D&D activities for the removal of below-grade pipes are not currently covered by an active Facility Safety Plan (FSP) and are not explicitly controlled by other health and safety documentation.

2.0 Work to be Done and Location of the Activity

2.1 Work to be Done

Each building undergoing D&D will be: fully scanned to identify buried lines, the lines will be identified, and the floor will be spray painted showing the type & location of each buried line.

This safety plan is limited to below-grade pipe removal efforts being performed by D&D personnel in buildings or facilities undergoing-sanctioned D&D activities. Typically below-grade pipe removal efforts entail:

- Exposing pipe in preparation for removal (i.e., manually unearthing using shovels);
- Extraction of pipe segments (with backhoe or similar equipment as appropriate);
- Interim storage of pipe in a plastic covered lay-down area for sampling/surveying; and
- Cutting the pipe into short sections to facilitate sampling and disposal.

2.2 Location

Throughout the Laboratory main site (Site 200), Site 300 and Offsite (as reviewed, approved and authorized through an IWS) in support of D&D field operations.

3.0 Scope of Work to be Done

The scope of work involves the removal of Potentially Contaminated/Hazardous Below-Grade Pipe removed from a facility during a D&D project.

4.0 Hazards Analysis & Controls

4.1 General Hazards

General hazards encountered during pipe removal activities include:

- Working with or in close proximity of heavy equipment (e.g., backhoes, fork trucks, and excavators);
- Typical pipe cutting and disassembly risks from falling components, debris and/or flying objects;
- Hazardous materials (e.g., asbestos and lead) that may be part of the pipe construction and coating, insulation materials, or surrounding materials (e.g., walls, concrete floors, solder joints and shavings);
- Littered and/or congested walking and working areas;
- Slips, trips, and falls;
- Cuts, bruises, & pinches;
- Confined spaces;
- Heat stress; and
- Fire.

Below-grade piping systems (e.g., sewer drains, retention tank drains) may be contaminated with hazardous and/or radioactive materials. Concentration of such materials is especially likely in line bends and traps. Removal of such piping systems may involve the potential for worker exposure to:

- Mercury (liquid or vapors);
- Acids (such as perchlorics and nitric)
- Residual amounts of unanticipated chemicals/hazardous materials/high explosives located in previously inaccessible areas;
- Residual amounts of alpha, beta and gamma emitting radioactive materials;
- Residual amounts of other unspecified toxic materials (e.g., inorganic or organic substances);
- Biohazards; and/or
- Unknown materials.

The potential loss of containment of loose radioactive contamination, residual explosive materials, and/or hazardous material inside piping could result in worker exposure or injury and environmental contamination from release of material to the ground.

Whenever penetrating soil and concrete slabs there is the potential for inadvertent contact with significant hazards (e.g., live electrical conductors, process contaminated pipes, natural gas lines, water lines, and air lines). Such inadvertent contact presents the potential for injury or death to personnel, the disruption of essential services, harm to the environment, and damage to real property.

The following controls will reduce the risk of general hazards:

4.1.1 The removal of piping systems shall be specified in the project specific IWS.

a. The history (maintenance, use, etc.) of each piping system shall be reviewed by the Responsible Individual and ES&H Team Disciplines during the IWS review cycle.

b. The current condition of the piping systems should be assessed during the IWS development. As a minimum, the following inspections should be performed:

- Observe accessible piping surfaces for discoloration or unnatural sediments or smell.
- Inspect accessible surfaces for obvious damage.
- Survey accessible surfaces and openings with an E-120, Blue Alpha Meter, organic vapor meter and mercury sniffer (and/or other instruments, as specified by the ES&H Team Disciplines).
- Evaluate the system for fatigue and integrity (as practical).

c. When there is insufficient system history or survey information, pre-disassembly sampling of internal surfaces may be performed (per EA/HP/IH/PM judgment) to confirm current contamination conditions (types and quantities) so that appropriate safety controls and sampling requirements may be established.

d. Further ES&H review, documentation, and control requirements, as necessary, will be specified by the ES&H Team Disciplines as conditions dictate and as systems are exposed.

e. Prior to initiating the removal of below-grade piping systems the Responsible Individual will ensure line location has been completed, below-grade lines are identified and clearly marked using the National Standard. As the building is peeled exposing buried lines the Responsible Individual shall ensure newly exposed SSCs are properly color-coded to reflect the hazard of the exposed lines.

4.1.2 Prior to beginning any excavation/penetration action in soil where utilities may be located, Plant Engineering Maintenance Operations Procedure (MOP) No. MOP-02003 entitled “Soil Excavation (Digging, Grading, Tunneling, Trenching, and/or

Drilling) Permit Procedure" shall be employed. If permits are issued they must be posted. The area to be surveyed is to be delineated.

4.1.3 Prior to beginning any penetration action in concrete floors, slabs, walls and/or ceilings greater than 3 inches in depth in buildings or areas where utilities may be located, Plant Engineering Maintenance Operations Procedure (MOP) No. MOP-03001 entitled "Concrete Structure (Floor, Wall, And Ceiling) Penetrations Permit Procedure" shall be employed. If permits are issued they must be posted at the job site.

4.1.4 Facilities undergoing D&D shall be scanned prior to beginning any penetration action in concrete floors, slabs, walls, and/or ceilings less than 3 inches in depth in buildings or areas where utilities may be located. The worker shall assure that the proposed work area is investigated for the presence of embedded utilities.

a. Natural gas lines: Work on natural gas lines shall be in accordance with applicable NFPA and LLNL guidelines.

b. Unknown lines: When unknown lines are encountered, work on those lines shall cease until the history or the hazards of the line can be identified.

Before buildings are peeled, tile removed, etc. line location shall be employed and completed. Minimally, a hand-held scanner capable of detecting metal and interior wiring in concrete to a depth of 3 inches shall be used.

4.1.5 The minimum Personnel Protective Equipment (PPE) requirements specified herein shall be confirmed as adequate or augmented by the D&D and ES&H Disciplines in the job-specific safety documentation [IWS and/or associated hazard assessment and control document, SP, etc.].

The minimum PPE requirements for workers cutting, removing, and handling potentially contaminated or contaminated piping are as follows:

- Leather/heavy gloves over high-grade Latex® (or approved alternative) gloves
- Safety shoes or stout work boots
- Shoe covers
- Safety glasses with side shields
- Tyvek®(or approved alternative), Laboratory issued coveralls, or lab coat
- Face shield when mechanical cutting is performed
- Hard hat

NOTE: The hard-hat requirement may be waived with written approval from the Industrial Safety Engineer.

4.1.6 The following equipment and materials are typically needed for piping system removal tasks and should be readily available during removal activities:

- Pipe cutter
- Sheet plastic/Herculite® and/or heavy gauge paper sheeting
- Plastic bags (for sealing pipe ends)
- Tape
- Indelible ink pen (to identify pipe pieces)
- Wipe (for decontamination and/or surveys)
- HEPA-filtered vacuum, or Mercury HEPA-filtered vacuum, when mercury is suspected
- Mercury spill kit (when mercury is suspected)
- Absorbent material
- Plastic waste bags
- Radiological monitoring equipment, as appropriate (e.g., two Micro-R meters, Blue Alpha meters, Tritium Sniffer, and E-120 meters with pancake probes)
- Mercury Sniffer
- Organic Vapor Meter/Photo-Ionization Detector
- Other appropriate survey instruments
- pH paper
- Methylene Blue (Perchlorate detection)
- Glassine bags and swipe tabs, as needed
- Contaminated waste receptacle(s) (segregated for RAD and NON-RAD, as needed)
- Appropriate radiation/contamination labels
- Spare PPE (e.g., gloves, shoe covers, and Tyvek®)
- Shovels

4.1.7 Whenever cutting and removing potentially contaminated or contaminated piping, a controlled work area shall be clearly established to prevent the migration of contaminants from the work site.

4.1.8 Establish an interim lay-down area to stage the piping system components for subsequent transfer to the waste area. The lay-down area(s) shall be controlled to mitigate the spread of contamination.

CAUTION: Sheet plastic can be a slip hazard, especially when wet. In situations where sheet plastic could result in a significant slip hazard, a heavy gage paper sheeting, or a Herculite® sheet shall be utilized. (Fire resistant plastic shall be used.)

4.1.9 In the event that torch cutting or similar operations are required, contact the appropriate ES&H Team Discipline.

NOTE: Use of a torch is not an option if energetic materials are suspected in the area.

4.1.10 Whenever working on piping or piping systems suspected of being contaminated with mercury, the Health & Safety (H&S) Technician shall monitor for mercury vapors whenever there is a potential for personnel exposure (e.g., when checking newly uncovered pipe runs; when making new pipe breaks; and/or releasing equipment, materials or areas).

4.1.11 Whenever working on piping or piping systems suspected of containing or containing large amounts of mercury, contact the ES&H Team Industrial Hygienist for task-specific instructions. The following precautions are recommended:

a. Whenever possible, place a catch basin made of smooth impervious materials (such as plastic or smooth-finish paint), large enough to contain the greatest amount of mercury that could spill and have sufficient dimensions to catch mercury droplets escaping from any plausible direction.

b. Felt mats or horsehair mats can be put on seamless plastic sheets laid in catch pans to catch the droplets from mercury spills. The droplets can then be collected by simply wrapping up the plastic with the mat still inside and disposing of it as mercury waste.

c. Stage the mercury HEPA filtered vacuum cleaner and mercury spill kit for quick deployment to the pipe separation area.

d. Avoid heating pipes that may contain mercury. If torch cutting or similar operations are required, contact the ES&H Team Industrial Hygienist for a task-specific hazard analysis.

NOTE: Use of a torch is not an option if energetic materials are suspected in the area.

e. Avoid walking on or touching surfaces contaminated with mercury.

f. If a mercury spill can not be cleaned up immediately, establish an exclusion area and post it with CAUTION signs stating, “Mercury Spill Area-Keep Out.

4.2 Sewage

The primary hazard involved in working on sewage pipes and related components are exposure to raw sewage. The potential for exposure to disease is the primary health risk, which must be controlled. The potential consequences, if workers are exposed, range from very short periods of discomfort to long-term illness.

A second less likely hazard involves exposure of the general population to disease as a result of cross-contamination if contaminated tools and equipment is utilized when working on the potable water systems. If pumps, hoses, or other equipment are not properly labeled or cleaned, and are utilized on potable water systems, the general Laboratory population could be exposed to the same disease as workers.

The following controls will reduce the risk of sewage hazards:

4.2.1 Individuals entering sanitary sewers, manholes, modifying sanitary sewer piping systems, cutting and capping sanitary sewer piping systems and/or disassembling sanitary sewer piping systems where raw sewage is present, shall wear the appropriate PPE as determined by the Industrial Hygienist.

Typical wet work PPE includes: knee-high rubber boots, elbow-length rubber gloves, Poly-Tyvek coveralls, and safety glasses with side shields/goggles that comfortably fit beneath closed face shield. Typical dry work PPE includes: safety shoes, surgeon's gloves, laboratory issue work coveralls (or equivalent garment), and safety glasses with side shields.

4.2.2 When work is completed, all equipment and hand tools used shall be completely disinfected by use of domestic water and commercial disinfectant. A 10 percent solution of household bleach (i.e., 9 parts water, 1 part house bleach) is acceptable. Tyvek suits shall be disposed of as routine waste unless radiation or hazardous materials are encountered. In this instance, the EA shall determine appropriate disposal. Boots, gloves, and respirators (if used) shall be cleaned with disinfectant.

Rinseate generated for disinfecting equipment will be collected for proper characterization and disposal.

4.2.3 Personnel working where raw sewage is present shall be free of any open wounds.

4.2.4 Personnel shall wash their hands immediately after completion of any work involving raw sewage and avoid any hand to mouth contact during these activities.

4.2.5 In order to prevent cross-contamination between the sanitary sewer system and the potable water system, all tools, hoses, pumps, and equipment utilized for work on the sanitary sewer system shall be labeled for "Sanitary Sewer Work Only" and stored in a separate location from similar equipment utilized for potable water system work.

4.3 Controls (Procedural)

CAUTION: Buried trap lines & elbows present the greatest potential for buildup of material in below grade pipe.

4.3.1 Prior to the removal of sewer lines, an evaluation will be made to determine on a case-by-case basis which method to use in excavating the lines. The two choices of method are: 1) remove pipes first and concrete second or 2) remove concrete first and pipes second.

4.3.2 The decision basis to determine the sequence of removal will take into consideration the following:

- Type of buried pipe system
- Diameter of the pipe
- Known/anticipated hazards
- Depth of pipe
- Number of floor drains, number of traps, and location

4.3.3 Mark/label the floor on each side of the pipes with the actual distance determined by the pipe diameter. The minimum distance will be 12 inches from center.

4.3.4 Ensure that the building tracing and underground locations are correct.

4.3.5 Clear all dirt and sand from the immediate area of the pipe such that it is completely visible. Observe the ground surrounding the pipe for discoloration, unusual smells, liquids or unnatural sediments. Inspect the pipe for any obvious damage and survey its length for radiological and hazardous material contamination as directed by the appropriate ES&H discipline.

All trenching and excavations shall be done in accordance with Document 12.1, "Access Control, Safety Signs, and Alarm Systems" (see Section 11.06: "Barricades and Barriers") of the *ES&H Manual*.

CAUTION: If unanticipated discoloration, unusual smells, liquids, unnatural sediments, or radioactive or mercury contamination are identified, STOP work on the piping and immediately call the appropriate ES&H team discipline. The discipline shall review the situation and recommend additional controls and/or PPE (if necessary).

4.3.6 Remove dirt and sand under the pipe to be extracted. Place plastic sheeting under the pipe section to be excavated such that it will collect any residue that may be inside the pipe at the point of separation. Apply dunnage to the underside of the pipe to prevent it from prematurely separating. The H&S Technician shall survey and inspect the pipe separation area so that cuts are made in areas of minimal radioactive/hazardous material content.

CAUTION: Be prepared for pipe breakage or inadvertent pipe separation due to failure caused by old age or the pipe's inability to support its own weight.

4.3.7 Place the pipe cutter around the pipe and tighten as much as possible without cutting. If using a hand-held pipe cutter, set the cutter over the point of separation. **DO NOT** initiate the cut until step 4.2.8 is complete.

4.3.8 Place an appropriate plastic protective shield over the cutter at the point of separation to minimize aerosol dispersion as directed by the appropriate ES&H Team discipline.

4.3.9 Actuate the pump on the cutter until the pipe is separated. If using a hand-held cutter, start cutter rotation until the pipe is separated.

NOTE: Potentially contaminated pipe (e.g. retention tank lines, buried trap lines, and sewer lines) should be cut into sections small enough to fit into hazardous waste containers in the event analysis deems them as hazardous/radioactive waste.

CAUTION: (1) Be watchful for signs of white or yellow crystals that are indicative of explosive materials. If observed, **STOP** work immediately and call the Explosives Safety Engineer for a thorough evaluation. (2) Avoid heating pipes that may contain mercury.

4.3.10 Remove the plastic protective shield (or sheet plastic if using a hand-held cutter) and pipe cutter. Clean all potentially contaminated residues adhering to the protective shield and/or cutter with cloth or paper wipes.

4.3.11 The HWM Sampling Technician shall acquire pipe interior samples as necessary to adequately characterize the pipe being removed.

CAUTION: If explosive contamination is suspected, contact the Explosive Safety Engineer immediately. Do not continue with the operation until the material has been identified.

NOTE: The H&S Technician may perform characterization sampling for equipment having low potential for process contamination, per the EA discretion and instructions.

4.3.12 Collect any residue that may have been generated in the cutting process for proper characterization and disposal.

4.3.13 Pull the plastic sheeting around the pipe. Cover the cut end of potentially contaminated pipes with a plastic bag (or equivalent) and seal the pipe ends (gooseneck) with tape. The H&S Technician shall verify that no contamination is on the exterior plastic sleeve.

NOTE: If necessary, clean a small area of the pipe where the tape is to be used to make sure the tape will stick.

CAUTION: Only clean a portion of pipe that does not contain any external contaminants and can withstand the extra handling without breaking.

4.3.14 Move the wrapped pipe from the trench by hand or mechanical means to the designated lay-down area. If necessary, continue to size-reduce and characterize the pipe segments under the same applicable controlled conditions as stipulated above. The RHWM Technician must notify the H&S Technician prior to sampling or size-reducing any bagged piping.

4.3.15 All excavating, cutting, and containment equipment shall be visually inspected, surveyed and swiped by the H&S Technician for radioactive and suspected hazardous contamination prior to release from the work area.

4.3.16 All personnel shall perform a whole-body contamination survey prior to leaving the work area, as appropriate.

4.3.17 The pipe separation area shall be surveyed by the H&S Technician for radioactive and suspected hazardous contamination, as appropriate, prior to its release for uncontrolled access.

4.3.18 All personnel shall wash hands and face before lunch, breaks, or leaving work.

ATTACHMENT H-4

REMOVAL OF POTENTIALLY CONTAMINATED BOX-TYPE HEPA FILTERS

NOTE: This is the generic version of the SOP. This SOP should be reviewed and modified, as needed, for each specific project.

1.0 Reason For Issue

This SOP identifies the hazards and provides the necessary controls for the removal of potentially contaminated or contaminated box-type HEPA filters in facilities undergoing deactivation, decontamination, decommissioning, and demolition (D&D) activities. D&D activities for the removal of potentially contaminated or contaminated box-type HEPA filters are not currently covered by an active Facility Safety Plan (FSP) and are not explicitly controlled by other health and safety documentation.

2.0 Work to be Done

This safety procedure is limited to box-type HEPA filter removal efforts being performed by D&D personnel in buildings or facilities undergoing sanctioned D&D activities. HEPA filter removal efforts generally entail:

- Establishing a controlled work zone in the immediate area of the filter(s) to preclude the spread of contamination during the separation and removable process;
- Removal of the HEPA filter(s) from the host ventilation system and their preparation for disposal;
- Isolation of (e.g., blanking-off) the ventilation system ducts from where the filter(s) were removed to seal the system from the outside environs; and
- Restoration of the work area to the contaminant levels present prior to the filter removal operation (when necessary).

3.0 Scope of Work to be Done

The exact scope of work to be performed during HEPA filter removal activities shall be specified in the job-specific Integration Work Sheet and safety document.

4.0 Hazards Analysis & Controls

General hazards encountered during HEPA filter removal activities may include:

- Falling components, debris and/or flying objects;
- Littered and/or congested walking and working areas;
- Slips, trips, and falls;
- Cuts, bruises, & pinches;
- Potential confined spaces; and
- Heat stress

HEPA filters and their associated ducting and fan systems may be contaminated with hazardous and/or radioactive materials. Removal of such filters may involve the potential for worker exposure to:

- Entrained high explosives;
- Entrained alpha, beta and/or gamma emitting radioactive materials; and/or
- Other unspecified entrained toxic materials (e.g., inorganic or organic substances).

The potential loss of containment of loose radioactive contamination, residual explosive materials, and/or hazardous material inside filters and their associated ducting and piping systems could result in worker exposure or injury and environmental contamination from release of material to the room, area or environment.

The following controls will reduce the risk of the hazards:

4.1 Prior to the removal of any filter, an Integration Work Sheet (IWS) shall be completed for the specific ventilation system(s) and filter(s) involved.

4.1.1 The history of each ventilation system shall be reviewed by the D&D Responsible Individual and ES&H Team Disciplines during the IWS construction and review.

4.1.2 Further safety review, documentation, and control requirements, as necessary, will be specified by the ES&H Team Disciplines during their review of the IWS.

4.2 The EA shall be consulted for all waste sampling, characterization, and disposal guidelines to establish the necessary controls for waste disposition and oversee the waste disposition process.

4.2.1 Disposition of HEPA filters must meet "Acceptance Process for Waste HEPA Filters by HWM Personnel" document #97-009, Rev. 1 (see attached document). A "WASTE HEPA FILTER INFORMATION" form must also be completed prior to shipment to HWM (see attached form).

4.3 Based on the ventilation system history and current conditions, the ES&H Team Disciplines shall assign the level of contamination-specific control required (e.g., none, low-level, or high-level). Control levels may be summarized as:

- No Contamination involved. Process-specific contamination controls are not required. Remove filters utilizing standard industrial safety controls.
- Low-level or Potential Contamination. Each filter removal shall require the use of the contamination control procedure described in Section 4.9 of this SOP, "Filter Removal Techniques -- Low-level Contamination."
- High-level Contamination. Each filter removal shall require the use of the contamination control procedure specified in Section 4.9 of this SOP, "Filter Removal Techniques -- High-level Contamination."

4.4 The minimum PPE requirements described in Sections 4.9 and 4.10 shall be confirmed as adequate or augmented by the ES&H Team Disciplines in the job-specific safety documentation (IWS and/or associated hazard assessment and control document, etc.).

4.5 The following minimum equipment and materials are typically needed for HEPA filter removal tasks and should be readily available during removal activities:

- Plastic sheeting
- Plastic bags (adequate sizes as needed)
- Tape (2-3 inches wide)
- Indelible ink pens
- Caps to cover filter ends (can be made from sheet metal, plywood, etc.)
- Appropriately-sized end-caps to cover open ducting ends
- Wipes (for decontamination and/or surveys)
- At least two Micro R Meters, Blue Alpha Meters and E-120 meters with Pancake Probes, and other detection instrumentation as specified by the ES&H Team Health Physicist
- Mercury Sniffer
- Organic Vapor Meter
- Other appropriate survey instruments
- Glassine bags and swipe tabs (as needed)
- Contaminated waste receptacle(s) (segregated for RAD and NON-RAD)
- Appropriate radiation/contamination labels and postings as required
- CAM (as required by Health Physicist)
- Spare PPE (e.g., gloves, shoe covers, Tyvek and head covers)
- Small glass vials to collect evaluation samples should Explosive contamination be suspected.

4.6 A controlled work area shall be clearly established to prevent the migration of contaminants from the work site whenever removing potentially contaminated or contaminated HEPA filters.

4.7 There shall be no eating, drinking, smoking, chewing (gum or tobacco), or applying lip balm/cosmetics in the work area where the potentially contaminated or contaminated filter is being removed. Storage of such items in the work area is prohibited.

Procedural Controls

4.8 Filter Removal Controls -- No Contamination

4.8.1 If the IWS determines that there is no potential for radioactive or hazardous contamination, process-specific contamination controls are not required. The D&D team may proceed utilizing standard, approved industrial safety controls.

4.9 Filter Removal Controls -- Low-level Contamination

The following contamination controls shall be employed, per Hazards Control confirmation in the IWS/HA, for removing low-level contaminated filters. These controls may be upgraded by Hazards Control during removal operations as contamination conditions warrant.

4.9.1 At least two filter removal workers plus a H&S Technician are required for low-level contaminated filter removal.

If the contamination is radioactive, at least one of the filter removal workers shall be a qualified radiation worker.

4.9.2 Minimum PPE requirements (Low-level or Potential Contamination):

- Leather gloves over thin nitrile gloves
- Safety shoes or stout work boots
- Shoe covers
- Safety glasses with side shields (except while wearing a full-face respirator)
- Tyvek® over-garment (or approved alternative) or Laboratory issue coveralls
- Half-mask respirator minimum, full-face/PAPR respirator optional
- Skull cap
- Hard hat, if overhead work is anticipated

CAUTION: Removal of HEPA filters may take place on roofs or at heights requiring scaffolding.

The use of PPE may affect movement and awareness of the work environment. Extra care shall be taken to prevent falls.

Planning and Preparation Period

4.9.3 Filter removal workers shall:

- Be qualified to wear half-mask and full-face respirator.
- Stage/Acquire tools and materials as required.

- Place plastic sheeting on the floor as primary floor contamination control. (This should encompass as much of the work area as required.)
- Place an additional piece of the plastic sheeting or paper beneath the area of separation.
- Follow the controls delineated in this section, as confirmed or augmented in the job-specific safety documentation.

4.9.4 The H&S Technician shall

- Verify that a current IWS and appropriate safety documentation, as specified in the IWS, are on file or initiate the IWS/HA with the ES&H Team Disciplines.
- Verify that workers have valid respirator cards.
- Inform the workers of the nature/type of contaminant(s) that will be encountered in the filter removal.
- Describe the safety techniques and approach that will be used during removal process.
- Follow the controls specified in the IWS/HA for PPE.

Filter Removal (Box -Type ONLY)

4.9.5 The filter exhaust blower should be running to maintain a constant air-flow through the exhaust side of filter.

NOTE: If the exhaust blower can not be utilized, portable ventilation or a glove-bag shall be used. Such alternative controls shall be detailed in the IWS and/or associated HA.

4.9.6 Worker #2 stands by with end cap/cover and tape.

4.9.7 Worker #1 removes the seismic restraints and the tape/clamps from the filter inlet side.

4.9.8 Worker #1 gently rotates and breaks loose the airtron/boot on the filter inlet side (prying with a screwdriver is sometimes needed). Do not remove airtron boot at this time.

4.9.9 Worker #2 moves into the area ready to cover the inlet side of filter.

4.9.10 Worker #1 will slowly break the airtron/boot from the inlet side, leaving a small gap between the boot and inlet. At this time, the H&S Technician and/or HWM Sampling Technician shall survey and swipe the inside of the filter inlet plenum for safety and characterization purposes, per ES&H Discipline instructions.

4.9.11 Worker #2 places end-cap/cover on the filter inlet side and tapes it in position.

4.9.12 Worker #2 can then place a plastic bag temporarily over airtron and secure the bag to prevent any movement. The ducting end-cap can now be checked for proper fit. If properly fitted, permanently install the ducting, hot-side end- cap.

4.9.13 The H&S Technician shall perform personnel and area surveys for radioactivity (if required) and shall survey and/or visually check for other contaminants.

4.9.14 Repeat steps 4.9.8 through 4.9.13 for the filter outlet side.

CAUTION: Assume that the filter outlet is contaminated.

4.9.15 The H&S Technician shall survey the filter exterior and surrounding floor area for radioactivity and/or suspected toxic material(s).

4.9.16 Once the survey is complete, the filter should be bagged out of the area and appropriately packaged and labeled as waste by the HWM team.

Post Removal Clean Up

4.9.17 The H&S Technician shall survey all items and personnel leaving the control zone for radioactive and hazardous contamination, as appropriate.

4.9.18 With H&S Technician coverage, Workers #1 and #2 shall roll the plastic sheet inward to prevent dispersal of potential contaminants and place in a bag for disposal.

4.9.19 The work area shall be surveyed by the Health & Safety Technician(s) for radioactive and other suspected hazardous contamination, as appropriate, prior to release for uncontrolled access.

4.9.20 All wastes shall be collected and disposed of in the manner stipulated by the EA.

4.9.21 The filter shall be marked for disposal with the known and potential contaminant type(s) and approximate levels (as determined from process knowledge and direct sampling/surveying information).

4.9.22 The contaminated filter shall be prepared for interim storage by the Hazardous Waste Management team.

4.9.23 Should Explosive Contamination be suspected, samples shall be collected in the glass vials per instructions from the Explosives Safety Engineer.

NOTE: All HEPA filters that are potentially contaminated with fissile material must be sent to Material Management for counting to determine the amount of fissile material contained in the filter.

4.10 Filter Removal Techniques - High-Level Contamination

The following contamination controls shall be employed for removing high-level contaminated filters:

4.10.1 When highly contaminated with radioactive materials, at least two Radiation Workers and one H&S Technician are required for a filter removal. If highly contaminated with other toxic materials (e.g., Be), all involved workers shall be thoroughly trained of the hazards and controls associated with the known contaminant(s).

4.10.2 Minimum PPE Requirements (High-Level Contamination):

- Leather gloves over thin nitrile gloves
- Safety shoes or stout work boots
- Shoe covers
- Two sets of protective clothing (e.g., double Tyvek®, Tyvek® over cotton protective garment)
- Full-face respirator
- Hood
- Hard hat if overhead work is anticipated.

CAUTION: Removal of HEPA filters may take place on roofs or at height requiring scaffolding. The use of PPE may affect movement and awareness of the work environment. Extra care shall be taken to prevent falls.

Planning and Preparation Period

4.10.3 The ES&H Team disciplines shall determine the safety technique and approach that is used for the removal operation. The bag-out method is preferred for changing highly-contaminated filters.

4.10.4 If the filter to be removed is in an area where the ventilation system is not at least double HEPA-filtered before exhausting to the atmosphere, a tent enclosure is required. The tent atmosphere shall be maintained at a minimum of -0.02 column inches of water pressure differential at all times, relative to the outside pressure, and monitored for airborne contamination. The tent shall be provided with HEPA-filtered exhaust ventilation. If the area does have a ventilation system that is at least double HEPA-filtered before exhausting to the atmosphere, the area/room must be at negative pressure relative to the corridor.

4.10.5 Filter removal workers shall:

- Be qualified to wear half-mask and full-face respirator
- Stage/Acquire tools and materials as required.

- Place and secure plastic sheeting on the floor as primary floor contamination control. (This should encompass as much of the work area as required.)
- Place and secure an additional piece of the plastic sheeting or paper beneath the area of separation.
- Follow all controls delineated in this SOP, as confirmed or augmented in the job-specific safety documentation.

4.10.6 The H&S Technician shall:

- Verify that a current IWS and appropriate safety documentation, as specified in the IWS, are on file or initiate the IWS/HA with the ES&H Team Disciplines.
- Verify that workers have valid respirator cards.
- Inform the workers of the nature/type of contaminant(s) that may be encountered during the filter removal.
- Describe the safety techniques and approach that will be used during removal process.
- Follow the controls specified in the IWS/HA for PPE.
- Verify proper CAM operation (if required, per IWS/HA) immediately prior to the start of work.
- Verify that the room is at negative pressure relative to the corridor immediately prior to the start of work. If a tent enclosure is required, verify a minimum of -0.02 column inches of water pressure differential within the tent, relative to the outside pressure, immediately prior to the start of work.
- Verify that at least two of each type of required radiation meter is available in the immediate work area.

Filter Removal (Box -Type ONLY) Bag-Out method

4.10.7 The filter exhaust blower shall be running to maintain a constant negative pressure on the exhaust side of the filter.

4.10.8 Remove the seismic restraints and the tape/clamps from filter inlet duct. Set up bag-out bag.

4.10.9 Carefully move filter to separate the inlet port from the contaminated ducting. The bag should unfold to maintain a contamination barrier.

CAUTION: Excessive air flow can cause the contamination barrier bag to be ingested into the filter housing or otherwise damaged. Ensure that the bag is adequately secured.

4.10.10 When about 30-60 cm of bag is unfolded, tightly wrap a 10-15 cm section between the duct and filter inlet with 2-inch vinyl tape.

4.10.11 Using a single-edge razor blade, cut through the center of the wrapped portion of the bag.

4.10.12 Use 2-inch vinyl tape to cover the cut ends of the wrapped bag.

4.10.13 Worker #1 gently inserts the exposed end of the bag into the inside of the duct on the hot side. The ducting end-cap can now be checked for proper fit. If properly fitted, permanently install the ducting, hot-side end-cap.

4.10.14 Worker #2 gently inserts the exposed end of the bag into the inside of the filter on the inlet side. When inserted, Worker #2 shall then place the end-cap/cover on the filter inlet side.

4.10.15 The H&S Technician shall perform personnel and area surveys for radioactivity (if required) and shall survey and/or visually check for other contaminants.

4.10.16 Repeat steps 4.9.8 through 4.9.13 for the filter outlet (cold side) if a contamination barrier bag was installed.

CAUTION: Assume that the filter outlet is contaminated.
If the filter outlet (cold side) is not furnished with a contamination barrier bag, perform the following:

1. Worker #1 removes tape/clamps from the filter outlet side.
2. Worker #1 gently rotates and breaks loose the airtron/boot on the filter outlet side (prying with a screwdriver is sometimes needed). Do not remove airtron boot at this time.
3. Worker #2 moves into the area ready to cover the outlet side of the filter.
4. Worker #1 will slowly back off airtron/boot on the outlet side. Do not travel any farther than required to insert the end-cap/cover by worker #2 onto the filter. At this time, the H&S Technician shall survey and swipe the inside of the filter outlet plenum for safety and characterization purposes.
5. Worker #2 places end-cap/cover on the filter outlet side and tapes it in position.
6. Worker #2 can then check the ducting end-cap for proper fit. If properly fitted, permanently install the ducting, cold-side end-cap.

CAUTION: If the exhaust fan is drawing from only this one plenum filter assembly and there is no further practical need to maintain an in-duct cold-side negative pressure, shut down the fan as soon as practical to preclude it from over-heating and burning-out.

4.10.17 The H&S Technician shall survey for radioactivity and/or suspected toxic material(s) on the floor and filter.

4.10.18 Relocate the filter to a nearby area and enclose it in a second plastic bag or other sealed plastic barrier. The filter must then be appropriately packaged as waste by the D&D RHWM team.

Post Removal Clean Up

4.10.19 The H&S Technician shall survey all items and personnel leaving the control zone for radioactive and hazardous contamination, as appropriate.

4.10.20 With H&S Technician coverage, Workers #1 and #2 shall roll the plastic sheet inward to prevent dispersal of any contaminant that might be there and place in a bag for disposal.

4.10.21 The work area shall be surveyed by the Health & Safety Technicians for radioactive and other suspected hazardous contamination, as appropriate, prior to release for uncontrolled access.

4.10.22 All wastes shall be collected and disposed of in the appropriate manner as stipulated by the EA.

4.10.23 The filter shall be marked for disposal with the known and potential contaminant type(s) and approximate levels (as determined from process knowledge and direct sampling/survey information).

4.10.24 The contaminated filter shall be prepared for interim storage by the Hazardous Waste Management team.

4.10.25 Should Explosive Contamination be suspected, samples shall be collected in the glass vials per instructions from the Explosives Safety Engineer.

NOTE: All HEPA filters that are potentially contaminated with fissile material must be sent to Material Management for counting to determine the amount of fissile material contained in the filter.

5.0 Bibliography

Standard of Fire Protection for Laboratories Using Chemicals, National Fire Protection Association (NFPA) 45, Current Edition.

Standard for Exhaust Systems for Air Conveying of Materials, National Fire Protection Association, (NFPA-91), Current Edition.

ATTACHMENT H-5

EXAMPLE SOP
Dismantling and Removal of a Ventilation System
Contaminated or Potentially Contaminated With Perchlorates

NOTES: 1) This SOP is an example and can be used as a template. This procedure will be developed for a specific project as needed; therefore any references to documents, organizations, or personnel should be disregarded. 2) This example SOP has been tailored to address the hazards, controls and methodologies specific to this project. Additional hazardous material may be encountered on a case-by-case basis in conjunction with perchlorics (i.e., radiological contamination). Controls for other hazardous materials will be specified in the HAC.

1.0 Reason for Issue

Seven of the Twenty Two B-412 ventilation systems may be contaminated with perchlorates, which are potentially explosive, and may detonate if handled incorrectly during ventilation system disassembly. Procedures for disassembly and decontamination of perchlorate-contaminated ventilation systems as well as the associated hazards and controls are not described in the LLNL Health and Safety Manual.

2.0 Scope of Work

This scope involves electrical and mechanical disconnect, sampling, testing, verification, component disassembly, system dismantlement, and decontamination of contaminated ducting, fans, and equipment associated with laboratory ventilation systems.

Work actions may be directed at disassembly of contaminated systems or components for the purpose of maintenance, or dismantlement, decontamination, and disposal. The following systems will be dismantled and removed in the following order:

FHE-4 located in room 1005 zone #4 (FHE-4)

FHE-5 located in room 1107 zone #4 (FHE-5)

FHE-6 located in room 1110 zone #4 (FHE-6)

FHE-7 located in room 1116 zone #4 (FHE-7)

FHE-8 located in room 1111 zone #4 (FHE-8)

HDCH-1 located in room 1237 zone #3 (FGBE-1000)

HDCH-2 located in room 1237 zone #3 (FGBE-1000)

3.0 Hazards of Perchlorates

Perchlorate residues are shock sensitive, and could explode or initiate a fire if subjected to mechanical shock, excessive heat, electrical discharge or other initiating event. Perchlorate residues are strongly reactive with organic materials requiring the use of inorganic tools, equipment and PPE.

In the event that the controls set forth are not properly implemented, a worst case-propagating explosion could potentially release significant amounts of energy, and could severely injure or kill workers in the immediate vicinity. Using water to dissolve the perchlorate salts and crystals into non-explosive and non-flammable compounds in water mitigates perchlorate hazards. These procedures render perchlorate residues insensitive making the worst-case event non-credible.

Perchlorates possess varying, but in general, fairly low toxicity. Skin or eye exposure may cause irritation. Inhalation of high concentrations may cause irritation, metallic taste, digestive disorders, chest pain or difficulty breathing. Ingestion of perchlorates may cause acute effects such as metallic taste, vomiting, digestive disorders, headache, bluish skin color, kidney damage, paralysis, convulsions, and/or coma. There is no specific occupational exposure limit for perchlorates (although there are limits for various metal perchlorates based on the metal content rather than the perchlorate).

Perchloric D&D work requires the use of intensive PPE, which will include ballistic body armor, helmets, and face shields. The use of this PPE introduces additional industrial hazards to workers due to narrow fields of vision and heat loading due to wearing heavy protective clothing.

4.0 Project Planning

How to Utilize this Document:

During the planning phase, the RI is required to tailor this SOP specifically for the task to be completed. Approval from Team 2 and the SOP RI is required before implementing the modified SOP.

The RI will also reveal which fume hoods fall under a Level One as well as a Level Two project.

Tailoring of this document would consist of providing additional detail in the appropriate sections.

Title: Define the project by building number.

Section 1.0: No details required.

Section 2.0: Identify specifically which systems will be removed i.e., FHE system, vacuum lines, drain lines, etc.

Section 3.0: No details required.

Section 4.0: No details required.

Section 5.0: Identify R&R's, by name, for each individual participating in the task.

Section 6.0: Identify specifically the PPE required for a Level Two project. Identify the approval of the PPE by stating who approved and on what date.

Section 7.0: No details required.

Section 8.0: Identify which buildings/area will be notified as well as the name of the POC for that building/area.

Section 9.0: No details required.

Section10.0: No details required.

Section 10.1: Identify specifically the FHE or HDCH # and the Level it falls under, room#, cut locations for each hood, sampling requirements and any integrity issues.

Section 11.0: No details required.

Section 12.0: No details required.

Section 13.0: Identify the specific PPE requirements.

Section 15.0: No details required.

Section 16.0: No details required.

Section 17.0: No details required.

There are two methods used by SAT to detect the presence of perchlorates, methlyne blue screening and ion specific electrode testing.

Methlyne blue screening is used as an initial characterization for the potential presence of perchlorates. The results of the methlyne blue screening can produce a false positive; Therefore, the ion specific electrode testing method is used (based on the Industrial Hygienists recommendation) to confirm the results of the methlyne blue screening test.

Two different levels of perchloric tasks may be encountered during D&D work. The following describes the two levels:

- **Level One:** A system having potential detonable levels of perchlorate salts.
- **Level Two:** A system having residual non-detonable perchlorate salts.

Since each fume hood/ exhaust system is different, each ERD perchloric D&D project shall be uniquely designed and tailored to the specific field conditions involved. In addition to the perchloric hazards, a review of all other potential hazards and their sampling results shall be conducted (ex. Radiological, IH metals, Beryllium, etc.).

A dismantlement plan is required for both the Level One and Level Two perchloric D&D project types. The plan includes a drawing showing the entire mechanical system, inlet to exhaust, and will be used as the basis for determining cut and separation locations, start and end points. During the planning phase of a Level One or Level Two project, the system shall be inspected to determine the best method to stabilize potential dried salts using water mist injection or other processes. Attention must be given to determine if low points in the system are at risk of breaking due to the added weight of water. Where this is a factor, inner tubes pressurized with air can be placed to provide support to the ducting.

When defining the disassembly plan, it is important to consider the size and weight of the components being removed. The following restricts the size of the components being removed:

- The ability to safely support, lift, and bag after separation
- Placement into a 55 gallon bag
- Full submergence into the selected decontamination bath

Duct dismantlement will be conducted using hand or battery-powered saws. When designing the dismantlement plan, it is critical to note all exposed flanges, gaskets, rusted or corroded bolts, or fitted connections. For a Level Two project, these areas are to be isolated by cutting the ducting to remove them intact.

Each Level One and Level Two dismantlement plan shall specify the starting location, including the tools and methods to obtain the initial entry or hot break.

Other factors:

a. A review of all duct run locations including vertical transitions through rooms shall be evaluated to determine the following:

b. Probability/ risk of collateral damage due to sympathetic detonations

c. Water damage due to roof leaks from roof decontamination work

d. Protection of programmatic materials from a potential explosion or fire.

e. Securing and purging of flammable gas systems associated with the contaminated ventilation system.

f. The encountering of other room specific hazards as part of the dismantlement work

g. Removal of materials stored in associated hoods prior to the start of work

h. Prior duct sample analysis

i. Fume hood drain end point locations

j. Evaluation of the integrity of the system to determine if the added weight of water will fracture or break the duct system.

k. Stagnant air issue

l. Pests/vermin/hanta virus concerns

m. Proper lighting

n. Slips/trips/falls from water spray

o. Workers risk to falling through ceiling

For a Level One and Level Two project, the system shall be spray painted identifying the location and angle where cuts shall be made during dismantlement, prior to the start of work.

A mock up dry run spanning walk through, full dress rehearsals will be conducted at the work site to ensure all team members are comfortable performing their assigned tasks in the required PPE under current field conditions. The mock up shall include equipment and PPE review.

5.0 Team Roles

- Oversight: (H&S Tech)
- Wash: (Laborer or H&S tech)
- Vacuum excess water: (Laborer, H&S tech or RHWM)
- Cutter: (Laborer)
- Support equipment: (Laborer or H&S tech)
- Surveys: (H&S Tech)
- Swipes: (H&S Tech)
- Viewing for crystals/stains: (H&S Tech)
- Tapping: (Laborer or H&S tech)
- Bagging: (Laborer or H&S tech)
- Staging: (Laborer)
- Equipment Transfers: (Laborer or H&S tech)
- Collect excess water from fume hood location: (RHWM)
- Transfer collection drum to next fume hood: (RHWM)

Note: Specific individuals will be assigned roles during the mock up dry run. Training will occur for performing different operations during the removal process, which will incorporate individuals changing positions. The changes will only occur the next day. Assigned personnel will remain on their assigned task for the entire day.

Note: The individual making the cuts will also tape the ends. The individual bagging will tape the bag at the top. Power tools will not be handed off to another individual. The tool will be layed down and the operator will pick the tool up. This will eliminate the possibility of engaging to tool while handing it off.

6.0 Personnel Protective Equipment

Level One Project

Team members working in the restricted zone will wear ballistic-rated flack vests, ballistic rated helmets with faceshields, slip resistant safety shoes, PVC coated tyvek coveralls and mid-weight natural rubber, nitrile, or neoprene gloves.

The associated HAC will identify the above-mentioned equipment as well as additional PPE requirements.

Workers shall perform PPE cross checks to assure proper fit and coverage.

Level Two Project

The level of PPE will be determined by the ES&H Team with concurrence from the Project RI and other appropriate personnel as necessary, i.e., the D&D Team Leader. The associated workers shall perform PPE cross checks to assure proper fit and coverage.

7.0 Training and Required Reading

All personnel engaged in D&D perchlorate ductwork shall have completed the following required and documented training prior to start of work:

- SOP qualification
- Perchloric qualification or follow the qualification card process
- Attend the pre-start
- Provide input to the SOP and checklist
- HAC review
- Job specific perchloric acid hazards communication training that addresses both the hazards associated with perchlorate residue and system D&D requirements.
- A pre-job walk through of the project area is a base requirement for perchloric projects. A full dress rehearsal mock up and dry run is required prior to the start of an activity.

8.0 Notifications

Building/area personnel shall be notified that the affected building area will be closed to all personnel not involved with this work. This shall be accomplished by the following means:

- Signs posted at entry doors

Based on the job specific probability of risk, additional notifications may be required for these activities. Other notifications may include Plant Engineering shift Foremen, LLNL Fire department, off-shift Hazards Control Technician, LLNL Laboratory Emergency Duty Officer (LEDO), and Facility managers of the adjacent buildings.

The P.M. (Matt Robison) will notify the surrounding FPOC's for buildings 411 (Dave Wetherall 3-5520 Pager 02124) and 418 (Dave Lavinsky 3-6538 Pager 00956) as well as the Fire Department (2-5194). Additional notifications are not required due to the low probability of perchlorate salts being present. If detonable levels are identified, all above-mentioned personnel will be contacted prior to continuing work.

9.0 Access Controls

All Level One D&D perchloric projects shall establish two specific access areas for each project.

Regulated Area: The Regulated Area establishes a boundary to keep non-project personnel away from the immediate work area, and is established on risk, quantity distance, and local field conditions.

A decontamination work area will be established within the Regulated Work area. This area is where water immersion is to be utilized for cleaning perchlorate contaminated ductwork and equipment.

Under no conditions can tools or equipment be brought into the Regulated Work area without prior review and approval of the project IH or Responsible Individual.

Restricted Area: The Restricted Area is the immediate location where the work is performed and will include adequate space for initial wash down, tools/ supply staging, and component lay down.

Unauthorized personnel will not be allowed in the Regulated or Restricted area during operations.

If unauthorized persons enter these areas during operations, work will be stopped until unauthorized personnel depart.

Boundaries to the Regulated Area will be established using ropes, tapes and signs indicating the following or equivalent.

Danger

Do Not Enter

Perchloric Acid Hood Dismantling

The methods for restricting access may vary, however the Restricted Work Area shall not be cordoned off due to the potential for the introduction of additional tripping hazards.

Only employees wearing ballistic gear and directly involved with the disassembly will be allowed within 75 feet of the contaminated ducting during the disassembly phase of a Level One project. One or more support persons are allowed within the 75-foot radius, wearing the lightweight flak vests, hardhat and a regular face shield. These support personnel may not approach within 75 feet of the ducting when decontamination or removal work is ongoing.

All ERD Level Two perchloric D&D projects shall establish one specific access area for each project.

Restricted Area: The Restricted Area is the immediate location where the work is performed and will include adequate space for initial wash down, tools/ supply staging, and component lay down.

Unauthorized personnel will not be allowed in the Restricted Area during operations.

If unauthorized persons enter this area during operations, work will be stopped until unauthorized personnel depart.

Boundaries to the Restricted Area will be established using ropes, tapes and signs indicating the following or equivalent.

Only employees wearing ballistic gear (as defined by Management described in Section 6.0 "PPE") and directly involved with the disassembly will be allowed within the Restricted Area during the disassembly phase of a Level Two project.

A key map will be utilized outlining the regulated area boundary as well as identifying the room where the fume hood resides.

10.0 Methodology

For a Level One and Level Two project, the system shall be spray painted identifying the location and angle where cuts shall be made during dismantlement, prior to the start of work.

Using a graded approach for a Level One or Level Two project, mock up dry runs spanning walk through up to full dress rehearsals shall be conducted near the work site to ensure all team members are comfortable performing their assigned tasks in the required PPE under current field conditions. The mock up shall include equipment and PPE review.

Perchloric contaminated system dismantlement should begin at a location where visual interior inspection can be easily obtained with the least physical impact and shock to the system. Contrary to other SAT contaminated HVAC system dismantlements; it is preferable to work from the blower, or end point, back to the fume hood. This method will generally allow the team to obtain visual and physical access by safe removal of the blower.

Field sampling for perchlorates using methylene blue is required during the disassembly process. Near field sampling using a Selective Ion Chromatography detector shall be used to determine the constituents of rinse water for release.

If the age of the systems, or the integrity of the ducting is suspected of being fragile and at risk of failure with the added weight of water being added during misting, additional supports must be included during planning. Additional supports may include placement of inner-tubes pressurized with air, or alternate acceptable dunnage outside the duct.

A funnel/drum system will be constructed at the fume hood allowing excess water to be captured and treated.

Since perchloric salts dissolve in water, the duct system shall be partially neutralized prior to the start of activities using a method defined and approved during the project planning process. Several options can be selected depending on the configuration, drain connections, and system location.

- For single exhaust systems venting vertical without lateral transitions, direct water wash down of the duct interior may be adequate.
- For single or manifold exhaust systems containing lateral duct runs or transitions, water mist injection propelled through the ducting by facility positive pressure air (?) can be utilized.

Perchloric D&D projects are very water intensive, which creates additional hazards to both the workers and to the facility. The work area must be contained to collect rinse water to minimize

cross contamination, slip hazards, and water leaks into the building. Use of buckets and 10 mil plastic sheets, or other approved methods needs to be addressed in the planning.

Tools used for disassembly shall be inorganic, preferably bronze tools. All equipment used in the project will be reviewed by the IH prior to use to ensure inorganic materials are utilized.

As duct pieces are exposed, team members shall continually view the interior of the system, inspecting for crystallized salts or other debris. After performing the duct interior inspection, one team member will wash the duct interior and exterior applying liberal amounts of water to ensure neutralization.

For a Level One project, as pieces are removed, the edges will be taped, they will be sprayed with water to keep the interior moist, sealed in plastic bags, and set aside in the localized staging area for later transport to the decontamination work area for the last phase of the decon project. The ends of the duct will be taped to prevent puncture to the bag. The lead person shall assess the work area for readiness (excess water, equipment and tools, PPE, etc.) before beginning each cut.

When further dismantlement will not be performed, a long non-sparking extension rod, (PVC, brass, etc.) bent midway to a 30° angle and fitted with sponges (after wetting) will be used to scrub the inside duct surfaces. The rod will also be used to obtain methlyene blue screening only when the entire system can be viewed and confirmed no crystals are present.

10.1 Duct Disassembly

FHE-4 located in room 1005 zone #4 (FHE-4)

FHE-5 located in room 1107 zone #4 (FHE-5)

FHE-6 located in room 1110 zone #4 (FHE-6)

FHE-7 located in room 1116 zone #4 (FHE-7)

FHE-8 located in room 1111 zone #4 (FHE-8)

HDCH-1 located in room 1237 zone #3 (FGBE-1000)

HDCH-2 located in room 1237 zone #3 (FGBE-1000)

Note: Cut points have been identified in the specific systems checklist photos.

(These steps must be executed sequentially)

<u>Level One Project</u>

Verify that the area is set up properly for a safe operation (lighting, herculite, all tools and equipment are ready for use, PPE, etc.)

Ensure all personnel have donned the appropriate PPE as stated in the associated HAC, make initial cut/break (using non-sparking tools) on the top-side of the boot/duct located near the blower. Make the cut large enough to allow a visual inspection, via a bore scope, for salt crystals.

a. Starting at the open boot/duct end located in the attic, the interior and exterior of the duct will be wetted using spray bottles or “Hudson” type sprayers. After wetting, a

wet sponge will be used to reach as far as possible into the open duct and wash all visible material clear of the first cut point and then thoroughly wash clean the inside of the duct past the point where sawing is planned. This goal is to wet the ducting past where sawing will occur to maintain a safety margin for workers starting on the next duct piece that will be exposed. A typical section would be 3 to 5 feet. After washing clean, the area will again be sprayed to wet the interior duct. The determination on "how clean is clean" can be made using visual, methylene blue tests, or ion specific electrode testing. We will be using visual and methlyne blue testing.

b. Before the duct is cut, the interior will be thoroughly inspected for crystal or "frosted" material and rad surveys will be conducted**.** In the event crystals are observed, a "Stop Work" will be enforced, the area cordoned off and the RI and IH must be notified to assess the situation.

c. As each section of duct is removed, surveys and swipes will be obtained, the ends will be taped and the section will be bagged and transferred to the localized staging area.

d. The lead individual will assess the work area for readiness prior to the next cut.

e. All gasketed flanges will be soaked in for 24 hrs. The water troughs will be located in the decontamination area.

f. The remaining sections will be transferred to either the WAA or project staging area based on survey results.

Level Two Project

a. Ensure all personnel have donned the appropriate PPE as stated in the associated HAC.

b. Ensure the area is set up prior to initiating work (Herculite, tolls, PPE, equipment, etc.)

c. Begin removing the system starting at the fume hood and working towards the last cut point during the Level One activity. Always be looking ahead for crystals as a precautionary step.

d. Perform swipes and surveys on each section prior to bagging.

e. Transfer sections to the localized staging area.

f. Once the entire system has been dismantled and removed, transfer the sections to either the WAA or project staging area based on survey results.

11.0 Fan Removal Precautions

Level One Project

All work on fans will be performed after electrical Lock Out/Tag Out has been completed. Workers shall ensure that the blades of the fan will not turn or free wheel during work activity.

Pre-wet the interior of the fan prior to the work by spraying water into the inlet and manually turning the fan shaft. Accumulated water shall be drained and tested.

When the inlet ducting has been removed and the interior of the fan has been made accessible, it will be sprayed down with water and scrubbed with sponges. The rinsate will be checked and when it no longer produces a color change in methylene blue, the interior cleaning is complete.

Exterior nuts, bolts and assemblies that are not contaminated can be removed with non-sparking tools while being misted with water.

Assemblies that may be contaminated with perchlorates such as fan gaskets, bolts, flanges will be moved to the decontamination area for disassembly after immersion into water for at least 24 hours.

12.0 Transporting Ductwork and Equipment to the Regulated Area for Decontamination

Level One Project

The wet portions of the ducting and equipment will be sealed in double plastic bags and safely transported to the Regulated Area in support of decontamination.

13.0 Decontamination and Final Disassembly

Level One Project

The final decontamination of the ductwork will occur in the established perchlorate Regulated Area.

During final decontamination, workers will wear flack vests, rubber, nitrile or neoprene gloves, safety glasses, and a face shield as minimum requirements. Additional PPE requirements will be identified by the ES&H Team with concurrence from the Project RI and other appropriate personnel as necessary, i.e., the D&D Team Leader on an as needed basis.

Sections of sealed ductwork will be placed in a fully immersing water bath in the Regulated Area, the plastic opened to allow water to enter and scrubbed until they are free of perchlorates as demonstrated by the methylene blue field test. Alternatively, ion selective chromatography can be used to verify methlyne blue results.

Sections of ducting with joints shall be soaked for at least 24 hours before any bolts are removed and any joints are opened under water.

For pieces that are too large for total submersion, plastic wrapping or other means shall be employed to create a field expedient bath.

14.0 Emergency Response Plans and Procedures

The Emergency Management Department of Facilities & Infrastructure shall be briefed on the hazards associated with this work at least one day prior to the start of duct disassembly.

In the event of fire, workers will evacuate their area and notify LLNL Emergency Management (911 from a landline or 447-6880 form a cell phone).

15.0 Maintenance, Inspections, and Quality Assurance

All PPE shall be checked, by the workers, immediately prior to its use, and confirmed to be correct, operable, and in good serviceable condition.

For a Level One project, during the ventilation system disassembly phase, a safety observer shall be stationed in the regulated work area. The observer shall be in constant visual contact and capable of communicating with the workers and support personnel.

16.0 Bibliography

Standard of Fire Protection for Laboratories Using Chemicals, National Fire Protection Association (NFPA) 45, Current Edition.

Standard for Exhaust Systems for Air Conveying of Materials, National Fire Protection Association (NFPA-91), Current Edition.

ATTACHMENT H-6

D&D VACUUM PUMP DISPOSITION PROCEDURE

NOTE: This is the generic version of the SOP. This SOP should be reviewed and modified, as needed, for each specific project.

1.0 Reason For Issue

This SOP identifies the hazards and provides the necessary controls for the disposition of vacuum pumps. Vacuum pump disposition activities are not covered by an active Facility Safety Plan (FSP) and are not explicitly controlled by other health and safety documentation.

2.0 Work to be Done and Location of Activity

2.1 Work to be Done

D&D/RHWM will assist in the removal, sampling, and disposition of various vacuum pump systems associated with buildings undergoing deactivation or demolition. These systems include pumps potentially exposed to hazardous and radioactive materials, which necessitate specific disassembly, sampling and disposal controls.

2.2 Location

Throughout the Laboratory main site (Site 200), Site 300 and Offsite (as reviewed, approved and authorized through an IWS) in support of D&D field operations.

3.0 Scope of Work to be Done

The scope of work involves the disposition of vacuum pumps during a D&D project. The disposition of vacuum pumps shall be specified in the project specific IWS.

4.0 Hazards Analyses & Controls

4.1 Hazards

Hazards associated with vacuum pump deactivation and disposition activities include possible exposure to, or release of, potentially hazardous and/or radioactive contamination located on external and internal surfaces of pumps and within associated pump oils/fluids.

The following controls will reduce the risk of hazards:

4.1.1 The historical location(s) and associated process systems for each vacuum pump should be identified (when possible) and documented prior to the pump's deactivation. Each pump and associated attachments will be assigned a unique

alphanumeric identification number that reflects the pump's as-found location and process system (when known), e.g., B222 R1703-1-north wall, B222 R1703-2-FHE2, B222 R1703-3-outside.

4.1.2 The following minimum protective clothing and controls are required for pump sampling and disassembly:

a. Safety glasses, safety shoes, double gloves and labcoat or lab issued coveralls.

b. Pump sampling/disassembly/storage shall take place in an area designated by D&D management and ES&H.

c. Double-containment should be utilized during sampling, draining, etc. (e.g., absorbent paper lined phototray). Ensure a spill kit is readily available during all sampling and disassembly activities.

4.1.3 Pump disassembly should be performed at a comfortable height, as pump size and weight permits.

Note: Supplementary PPE and controls may be added on a case-by-case basis, per ES&H discretion, for hazards not identified in this procedure (i.e., vacuum pump labeled as Beryllium Contaminated, etc.).

Sampling Procedure

4.1.4 Evaluate Pump External Surfaces [HC]

a. Direct $\alpha/\beta/\gamma$/x-ray radiation survey

b. $\alpha/\beta/^{3}H$ swipes

c. IH metals swipes, per Industrial Hygienist discretion (based on pump condition and location, etc.)

d. Hg sniffer survey of pump openings

Note: If the sniffer survey detects Hg, RHWM will assume the sampling and disposition process. A pump-specific hazard assessment will be required for further sampling and disposition activities.

4.1.5 The ES&H Team will evaluate the external survey and swipe information to confirm or enhance PPE requirements and pump disassembly procedure.

4.1.6 Drain and sample oil [RHWM]

a. A composite sample of the oil may be obtained from up to 5 pumps, per ES&H Team Discipline/PM instructions. (NOTE: If it is suspected the pump was used in association with explosives processing, the oil sample shall not be combined with other samples.)

b. Submit oil samples to CES or equivalent laboratory

c. If the pump was used in an explosives operation contact and Explosives Safety Engineer for sample disposition.

Note: Oil/fluid samples should be tracked according to their pump ID number(s).

4.1.7 Disconnect pump. Move pump and associated oil to the pre-designated disassembly and sampling area. [Labor]

4.1.8 Disassemble pump [RHWM]

4.1.9 Perform interior surface surveys and inspections

a. Inspect pump internals for chemical buildup.

b. Sampling requirements for pumps that contained oil:

- Direct $\alpha/\beta/\gamma$/x-ray radiation survey [HC]
- $\alpha/\beta/^{3}H$ swipes for each pump [HC]
- IH metals swipes for each pump [HC]

c. Sampling requirements for dry pumps:

Note: Although pumps may appear to be dry, oil might still be trapped in cavities and casings. All pumps destined for scrap or waste must be completely opened to ensure that no flowing liquid remains in the pumps.

- Direct $\alpha/\beta/\gamma$/x-ray radiation survey [HC]
- $\alpha/\beta/^{3}H$ swipes for each pump [HC]
- TTLC swipes for each pump. For grouping of up to 5 pumps (per EA/PM instructions): take one swipe sample from each cavity of the 5 pumps. Combine all 5 swipe tabs into one sample container to establish one representative composite sample. The composite sample shall be sent to CES to be analyzed for TTLC metals and RAD. [HWM]

d. Ensure all freestanding liquids are extracted. Add sorbent material, if needed, to affix residual liquids/sludges.

Disposition

4.1.10 Vacuum pumps intended for Excess, Reuse, Sale, or Scrap shall be released per Document 21.5, "Requirements for Transfer of Equipment and Property for Repair, Reuse, Maintenance, Storage, Excess or Scrap" of the *ES&H Manual*.

4.1.11 Pumps found to contain oil contaminated with radioactive or hazardous materials shall be contained and labeled with the type and amount of the contaminant. The ES&H Team Disciplines, and program management (when applicable) shall determine whether a pump is to be decontaminated or disposed of as hazardous, radioactive, or mixed waste. Decontamination activities require a separate ES&H assessment.

SOP Glossary

Accuracy

The ability of a procedure to determine the "true" concentration of an analyte.

Adsorption

A physical phenomenon whereby molecules adhere to a surface with which they come into contact.

Affected Worker

An LLNL worker or supplemental labor worker who is not performing servicing or maintenance on equipment but who typically operates or works in the vicinity of such equipment.

Air Lifting Pumping

The process by which well water is hydraulically forced to the surface by lowering its specific gravity by pumping compressed air through an air line into a submerged eductor pipe (Driscoll, 1986).

Alkalinity

Alkalinity of a water is its acid-neutralizing capacity. Because the alkalinity of many waters is primarily a function of carbonate, bicarbonate, and hydroxide content, it is taken as an indication of the concentration of these constituents.

AMS-TR7000

Art's Manufacturing & Supply, Inc. Well Management System.

Analytical Laboratory Performance Evaluation/Check Samples

Performance evaluation samples are used to measure the performance of the laboratory on unknown samples. The results are compared to predetermined acceptance limits.

Analytical Result

Report of data obtained from analysis, observation, or measurement.

Annulus

The space between the drill string or casing and the wall of the borehole.

Applicable or Relevant and Appropriate Requirements (ARARs)

ARARs are legally applicable or relevant and appropriate requirements, as used in Comprehensive Environmental Response, Compensation and Liability Act of 1980.

Aqueous Phase Carbon

Carbon used for adsorbing contaminants in water.

Archaeological Survey

For Site 300, a mandatory survey conducted by a trained archaeologist to inspect an undisturbed area for archaeological interest prior to conducting environmental activities.

ASCII

An acronym for American Standard Code for Information Interchange. ASCII defines the codes the computer uses internally to store letters, numbers, punctuation, and some control codes.

Bailer

A bailer is used for grab sampling or for evacuating small diameter wells or larger diameter wells with low yields and/or small casing volumes. A bailer is a small-diameter cylindrical-shaped tube made from Teflon, stainless steel, polyvinyl chloride (PVC), or polyethylene materials. A check ball is housed in the bottom of the tube. The check-ball rises as the tube is lowered downhole allowing the tube to fill with water. As the tube is raised to the surface, the check-ball seats, preventing water loss. To collect a sample from the tube, a bottom-emptying device is inserted into the tube which expels the water. Appropriate sample containers are then filled.

Barcad

The Barcad system is a positive-displacement gas-drive sampler made of porous, chemically inert materials. High-purity nitrogen gas is used to displace the ground water and drive it to the surface for sample collection.

Base Station

Also called a reference station. A receiver that is set up at a known location specifically to collect data for differentially correcting rover files. The base station calculates the error for each satellite and, through differential correction, improves the accuracy of GPS positions collected at unknown location by a roving GPS receiver. You can use a Trimble GPS Community Base Station or a Trimble GPS receiver in base station mode.

Batch

A group of 20 samples or less, of similar matrix type, prepared together or analyzed together if no sample preparation is required, under the same conditions and with the same reagents.

Beavertail Strap

This is a device used to deploy sensors between an IMT borehole liner and the side of a borehole. The name of this device is derived from its appearance in cross section. It is thick in the middle and tapers to the edges in the same way as a beavertail. The Beavertail Strap is lowered into a borehole before the IMT membrane is deployed.

Biological/Ecological/Archaeological Survey

For Site 300, a mandatory survey conducted by a trained biologist to inspect an undisturbed area for endangered species or sensitive habitats prior to conducting environmental activities.

Bladder Pump

A bladder pump, such as a Well Wizard, consists of a Teflon or PVC membrane bladder contained within a plastic or stainless steel or PVC housing. Well water fills the Well Wizard bladder through a one-way check valve at the bottom. Compressed air is forced between the pump housing and the bladder causing the bladder to compress, thus forcing water up the discharge tube and to the surface. These pumps are ideal for wells producing a sustainable yield of <1.0 gpm, where the casing depth does not exceed 150 feet, and where there is not a significant quantity of water to remove (>100 gals).

The nongas contact, positive displacement bladder pump has been found to cause the least amount of alteration to the sample when compared to a variety of retrieval methods (Nielsen and Yeates, 1985; Barcelona et al., 1984). Although no system can provide a true in situ sample, this method, if employed correctly, can yield a sample that is representative and valid for numerous field measurements and chemical analyses, including organics. However, due to relatively slow discharge rates (<0.5 gpm) the use of bladder pumps is not always practical.

Blind Collocated Samples

Blind collocated samples are samples that have their real identifications replaced with fictitious identifications prior to submittal to analytical laboratories.

Borehole

Any penetration of the ground surface created by drilling equipment.

Borehole Rugosity

Borehole wall roughness or irregularities in borehole diameter.

Borehole/Well Construction Log

A data collection form completed during drilling and well construction activities describing the lithology, well completion, and soil sampling details.

Breakthrough

A stage at which carbon (GAC) is unable to adsorb any more contaminants.

Bridging

An obstruction in the drill hole or annulus. A bridge is usually formed by caving of the wall of the borehole, by the intrusion of a large boulder, or by filter pack materials during well completion.

Calibration

The comparison of a measurement, standard, instrument or item with a standard or instrument of higher accuracy to detect and quantify inaccuracies, and to report or eliminate those inaccuracies by adjustments.

"Capable of Being Locked Out"

An energy isolating device is capable of being locked out if it has a hasp or other means of attachment to, or through which, a lock can be affixed, or it has a locking mechanism built into it. Other energy isolating devices are capable of being locked out, if lockout can be achieved without the need to dismantle, rebuild or replace the energy isolating device, or permanently alter its energy control capability.

Calibration Blanks

Calibration blanks are prepared and analyzed with standards to create a calibration curve. A calibration blank should differ from other standards only by the absence of an analyte and provide the "zero-point" for the curve.

Centralizer

A device used to keep the well casing centered within the borehole.

Chain-of-Custody (CoC)

A method and record used for documenting the history and sequential possession of a sample from the time of collection or generation through analysis and data reporting.

Chkchar

A program whose function is to scan an ASCII file looking for unprintable and illegal characters.

Christy Box

A cement or steel enclosure for below-grade completed monitor wells installed in areas of vehicular traffic.

Cleanwell Program

A program that produces a printout of pertinent information regarding "hits" in sampled locations where no hits should be observed.

Collocated Samples

Collocated samples are independent samples collected in such a manner that they are equally representative of the parameter(s) of interest at a given point in space and time.

Controlled Document

A document that is prepared, reviewed, approved, and distributed in accordance with established implementation procedures. Controlled documents are subject to controlled distribution and to a defined and controlled change process.

Contaminants

Chemicals or substances detrimental to human health.

Core

A continuous columnar sample of sediment or rock extracted from a borehole during air, mud-rotary, or hollow-stem auger drilling using a core barrel or split-barrel sampler.

Core Barrel Sampler

A reaming shell and length of tubing used during drilling to collect subsurface samples in unconsolidated or bedrock formations.

Core Run

An uninterrupted drilling sequence that results in the cutting (coring) of an interval of sediment or rock from a borehole. The length of a core run interval is determined by the driller and is based on the rig and drilling conditions.

Cost Effective Sampling (CES)

A methodology with supporting software, for estimating an appropriate frequency (and, as a result, lowest cost) of a sampling schedule for a given ground water monitoring location and still provide needed information for remedial and compliance-related decision making. The CES algorithm bases sampling frequency decisions on quantitative analyses of the trends and variability of important contaminants (e.g., volatile organic compounds) at a given monitoring location.

CSV

An ASCII file containing field values separated by commas.

Data Dictionary

Information that describes features that will be located in the field. This description includes feature names, data type classification (point, line or area), attribute names, attribute types, and attribute values. After being created on a PC, a data dictionary is downloaded to a data collector and used when collecting data in the field.

Data Logger

A data logger is used to acquire data from analog or digital sensors and to log these data in a digital format. These devices can use analog to digital converters to collect data from analog sensors such as thermistors, thermocouples, net radiometers, pressure transducers, soil moisture sensors, wind direction sensors and sonic anemometers. They can also acquire data from sensors that produce signals in the form of a pulse such as wind speed sensors, radiation sensors, motor speed sensors and flow meters. Once the data logger has acquired these data, they are stored in the data loggers' electronic memory along with other information, such as the time and date that they are collected. Periodically, these data are transferred from the data logger to a computer where they can be processed and stored for future use.

Data Reference Library (Division)

An area designated as ERD's center for easily accessible hard copy data storage.

Differential Correction (Differential GPS, DGPS)

The process of correcting GPS positions at an unknown location with data collected simultaneously at a known location (base station). Differential correction usually applies to receivers that use C/A code positioning techniques. The process of differentially correcting one receiver's location relative to another's can be done during postprocessing or in real-time, if radios are used.

Dip

The maximum angle of inclination from the horizontal of bedding or other planar features. The angle is measured in a vertical plane perpendicular to the strike.

Dissolved Oxygen (DO)

DO is the amount of oxygen dissolved in water at a given temperature. The dissolved oxygen content of a water sample at the time of collection is measured in milligrams per liter (mg/L).

Document

Any written, pictorial or electronically stored information describing, defining, specifying, reporting, or certifying activities, requirements, plans, procedures, or results. A document is not considered to be a QA record until it satisfies the definition of QA record.

Document Control

The process that provides for document adequacy review, approval for release by authorized personnel, and distribution for use at the prescribed work locations.

DOS

Operating system software commonly used in microcomputers.

Double Blind Samples

A double blind sample is a performance evaluation (PE) check sample, which is submitted to the laboratory. The sample is disguised to look like a routine sample; therefore, the laboratory does not know it is a PE.

Drill Cuttings/Laydown Area

The Drill Cuttings/Laydown Area is located at the Livermore Site. The entrance to the Drill Cuttings/Laydown Area can be accessed from Outer Loop Road, south of East Gate Drive. It consists of two separate bermed storage pits inside a larger bermed area used as a temporary storage for drilling derived soils and drilling fluid.

This area can be used to store drilling derived soil cuttings and used drilling fluid when their chemical concentrations are equal to or below the Livermore Site background concentrations for contaminants of concern.

The gravel road on the perimeter of these storage pits is also used as a laydown area by the drilling contractor for drilling supplies and drilling related equipment.

Drilling Workplan and Sampling Plan

A detailed document describing the procedures used to collect, handle, and analyze sediment or rock samples to ensure that data quality objectives are met.

Duplicates

Duplicates are additional aliquots of a sample that are subjected to the same preparation and analytical scheme as the sample. The duplicate measures the precision of a given analysis and is expressed as the relative percent difference (Section 4.14 of this SOP).

Edit Report

A printed report showing data from within a set of working tables. The printed report is used for proofreading and verification purposes.

Ephemeris

A list of predicted (accurate) positions or locations of satellites as a function of time. A set of numerical parameters that can be used to determine a satellite's position.

Electrical Conductivity (EC) or Specific Conductance

EC is a measure of the ability of a material to conduct a current under the influence of an applied electric field. It is the reciprocal of resistivity and is measured in micro-mhos/cm (μmhos/cm).

Electrical Resistivity

A physical property of materials which limits or opposes the flow of electrical current. Electrical resistivity is the inverse of conductivity and commonly measured in units of ohm-meter and is directional in nature.

Electric Submersible Pump

An electrical submersible pump is a motor driven device that forces water to the surface through centrifugal force. This action is accomplished by impellers housed in a stainless steel cylindrical casing that propels water up through the discharge tube and to the surface. In order to regulate flow, a sampling "T" is attached to the terminus of the wells discharge line. This "T" is equipped with a ball valve to adjust flow. Some electric submersible pumps, such as the Redi-Flo 2 is equipped with a rheostat mechanism allowing a much wider range of discharge rates to be achieved.

Submersible pumps are generally constructed of plastic, rubber, and metal parts that can affect the analyses of samples for certain trace organics and inorganics. As a consequence, care must be taken in choosing an appropriate submersible pump for wells that may contain trace concentrations of these constituents. Grundfos electrical pumps, which are constructed from stainless steel and NBR Nitril rubber, are acceptable in investigations involving trace constituents. However, the use of Grundfos pumps is limited to wells with an internal diameter >4 in. Electrical-powered submersible pumps can run off a 115-, 230-, or 460-volt AC power supply. The Redi-Flo 2 pump can be used in 2-in. diameter wells. Pumps with 115-volt vacuum motors are single phase, 230-volt vacuum motors may be either single or three phase, and 460-volt motors are three phase pumps.

Elevation Mask

The lowest elevation, in degrees, at which a receiver can track a satellite. Measured from the horizon, 0°to 90°. Normally set to 15° to avoid interference problems caused by building, trees, and multipath errors.

EMS

Environmental Management System.

Energized

Connected to an energy source, or containing residual or stored energy.

Energy-isolating Devices

Mechanical devices that physically prevent the transmission or release of energy, including, but not limited to, the following:

- Manually operated electrical breaker.
- Disconnect switch.
- Manually operated switch that disconnects the conductors of a circuit from all ungrounded supply conductors and that does not allow the poles to be operated independently.
- Line valve.
- Block.
- Similar device used to block or isolate energy.

Pushbuttons, selector switches, interlocks, and other control circuit-type devices are not energy-isolating devices.

Energy Source

Any source of electrical, mechanical, hydraulic, pneumatic, chemical, thermal, or other energy. The term "multiple energy sources" includes equipment using more than one form of energy or more than one source of the same type of energy, e.g., two electrical circuits that are controlled independently of one another.

Equipment Supervisor

The person designated by management to be in charge of a piece of equipment. For example, this person may be an FPOC, principal investigator, Responsible Individual, Plant Engineering craftsperson, or administrative specialist. The equipment supervisor is the responsible user or caretaker of the equipment, which may be programmatic equipment or installed real property. The equipment supervisor is usually the first person to notice (or have reported to him/her) that a

piece of equipment is not working properly. An equipment supervisor may also be a LOTO-authorized worker.

EPDBS

The logical name of a host computer maintained by ERD as part of a distributed computing domain. This computer serves the EPDData database.

EPDData

A relational database used to store and retrieve data generated in environmental sampling, analysis, measurement, characterization, and remediation activities.

EPGEM

The logical name of a host computer maintained by ERD as part of a distributed computing domain. This computer serves the Gemini databases.

Equipment Blank

A sample of analyte-free media which has been used to rinse the sampling equipment. It is collected after the completion of decontamination and prior to sampling. This blank is useful in documenting adequate decontamination of sampling equipment.

ES&H Deficiency

An ES&H deficiency is any identified activity, occurrence or condition which is not in compliance with the environmental, health and safety requirements of: Federal and State laws, DOE regulations, LLNL policies, and LLNL manuals.

Field

One basic independent element of a data record. For example, the sample log number is one of the fields of a sample record.

Field Blank

The field blank is deionized, analyte-free water which is poured into sample containers in the field at a predesignated sample location. This will indicate any contamination from the sampling container and/or the environment in which the primary sample was collected.

Field Logbook

Field logbooks are controlled documents that are bound notebooks with numbered pages.

Fixed GAC Canister

Large GAC canisters which are anchored to the supporting base and cannot be moved manually.

Flame Ionization Detector (FID) Meter

A portable field instrument used for the quantification of organic compounds ranging from methane to aromatic compounds such as benzene. The FID works by ionizing molecules by a hydrogen flame, and measuring the current generated. The measured current is directly proportional to the number of ionized molecules, and so the concentration of the compound(s) can be determined. As the organic compounds burn, positively charged, carbon-containing ions are produced and are collected by a negatively charged collecting electrode. The current produced is directly proportional to the compound concentration. Due to the use of the flame, this instrument is less sensitive to moisture in the vapor stream than the photoionization detector. The FID is usually calibrated against methane, but can also be calibrated using other compounds.

FLUTe

FLUTe is a brand name for some borehole liner systems used at LLNL. It stands for Flexible Liner Underground Technologies, Ltd. Co. FLUTe is located at 6 Easy Street Santa Fe, New Mexico 87501. This product fulfills the same functions as SEAMIST liners and has replaced them because SEAMIST in no longer available.

Flux Chamber

An emission isolation flux chamber is an enclosure of known volume with an open end of known area that is placed on soil surfaces to quantify fugitive soil emissions. The chamber contains several penetrations that are used to introduce “sweep-air”, to allow chamber-air to exit and for temperature and pressure sensors. Attachment A shows a Flux Chamber schematic.

Freeboard

The amount of space left unfilled in a hole or depression.

Galvanic Resistivity

Electrical resistivity that is a result of direct galvanic coupling of the measuring circuit to the material to be measured, and is measured using electrodes.

Gas-Sample Ports

Small diameter tubes installed on IMT membranes are used to collect soil-vapor or liquid-water from known depths in the borehole and to transport these materials to the surface where they can be sampled. When these tubes are not needed for sampling they can be connected to pressure transducers that log soil-pressures.

Gemini Database

Either of two read-only copies of EPDData, named Gemini1 and Gemini2. These are copied on a regular basis.

General LOTO

The required energy isolation and control procedure for any equipment or machine that does not have an equipment-specific written procedure. General LOTO is only used on equipment that is easily disconnected from all energy by a single disconnect means and that meets all of the other criteria listed in Section 3.1.1.

Geophysical Log

A geophysical log is a paper copy record of geophysical measurements made in a cased well or uncased borehole. Geophysical logs are plotted with amplitude on the horizontal scale and depth on the vertical axis. A common format in the American Petroleum Institute (API) format consists of four data display tracks; one log display track to the left of the depth track and two log display tracks to the right of the depth track.

Global Append Logbook

A controlled logbook used for documenting all append activity performed by ERD Data Management Team (DMT) personnel in the EPDData Database.

Global Tables

Tables within the EPDData database which are owned by the database administrator's account. Data within such tables may be accessed by authorized users of the database and are part of the globally accessible data in the database.

Grab Sample

A grab sample is one in which no well purging has been conducted prior to sample collection.

Granular Activated Carbon (GAC) Treatment Unit (GTU)

A treatment unit which treats ground water by adsorption of the contaminants by a GAC bed.

Greenwich Mean Time (GMT)

The time at the prime meridian (0° longitude) which runs through Greenwich, England (borough of Greater London). For every 15° traveled east of the prime meridian, the clock is advanced 1 hour. For every 15° traveled west of the prime meridian the clock is one hour earlier.

Ground Water Sampling Log

A data collection form which is completed in the field describing a ground water sampling event in detail.

Gypsum Block

A gypsum block is a device used to measure soil moisture by electrical resistance. It consists of two concentric stainless steel cylinders imbedded in gypsum and is deployed directly into soils. When properly deployed, the moisture content of the gypsum block will come to equilibrium with the moisture in the soil after a short time. Wires from each of the stainless steel cylinders in the gypsum block are connected to a data logger. The data logger measures and logs the electrical resistance between the cylinders. When moisture in the soil increases, the resistance of the gypsum blocks drops. Conversely, as the soils dry, the resistance across these wires increases. A fifth order polynomial equation is used to covert electrical resistance to bars of soil moisture tension.

Halocarbon

A carbon-based compound containing one or more halogen atoms (fluorine, chlorine or bromine).

HE Data

The results from analytical testing for high explosive compounds.

Headspace

The space within a container which is composed of air above a solid or liquid.

Hit

A reported chemical constituent concentration above the reporting limit of a particular analytical method.

Hydraulic Derrick

A hydraulic crane having a boom hinged near the base of the mast for lifting and moving heavy objects.

Hydraulic Test

A hydraulic test is a controlled field experiment performed to determine the hydraulic properties of water-bearing materials.

Hydrologic Unit

A group of one or more stratigraphic units that is considered a single hydraulic system.

Imhoff Cone

A graduated clear plastic cone used to measure the volume of silt and sand that is present in water.

Inductive Conductivity

Electrical conductivity is a result of inductive coupling of the measuring circuit to the material to be measured, and is measured using co-axial coils.

Installed Real Property

Equipment including building air conditioners, substations, and building power and distribution systems. Usually, installed real property equipment is maintained by Plant Engineering, and the cost of maintenance is charged to the Plant Engineering M&O accounts.

Instrumented Membrane Technology (IMT)

Instrumented Membrane Technology (IMT) uses a flexible, removable, plastic-coated membrane-tube to deploy various types of instruments and at least two different kinds of sampling systems in uncased boreholes. The IMT membrane-tube is "blown" down the borehole from a spool within a pressurized canister by compressed air. Once in place, the membrane-tube is held against the sides of the borehole by filling the tube with compressed air, sand, water, or with a foam packer.

IMT is a generic term for the borehole liner system formerly known as SEAMIST. These systems have been produced by Science Engineering Associates (Santa Fe, NM), ECE Technologies (Houston, TX) and Flexible Liner Underground Technologies, Ltd. Co. (Santa Fe, NM).

Intake Shroud

A tube or pipe installed on the lower end of an electrical submersible pump that forces the ground water to run past the motor portion of the pump before entering the pump intake. This helps reduce or prevent the pump to over heat during low flow operation.

Internal Standards

Internal standards are measured amounts of a certain compound added after sample preparation or extraction. They may be used in an internal standard calibration method to correct sample results suffering from instrumentation problems such as capillary column injection losses, purging losses, or the effects of viscosity. Evaluation of internal standards performance ensures the stability of sensitivity and response during each analysis.

Interlaboratory Collocated Samples

Interlaboratory collocated samples are collocated samples which are collected and sent to different laboratories for analysis. Interlaboratory collocated samples provide interlaboratory precision information for the entire measurement system including sample acquisition, homogeneity, handling, shipping, storage, preparation, and analysis.

Intralaboratory Collocated Samples

Intralaboratory collocated samples are collocated samples which are collected and sent to the same laboratory for analysis; usually one is sent as a blind sample. Intralaboratory collocated samples provide intralaboratory precision information for the entire measurement system including sample acquisition, homogeneity, handling, shipping, storage, preparation, and analysis.

Investigation-Derived Wastes (IDW)

Investigation-Derived Wastes (IDW) are drill cuttings, core samples, drilling mud, initial development water, and/or purged ground water which are typically produced during field activities (i.e., the drilling of boreholes, installation/development of wells, and ground water sampling).

Isolation (of Energy)

The prevention of the transmission of hazardous energy by means of a direct, positive method, such as opening a circuit breaker or closing a valve. Indirect means, such as control switches and interlocks, are not permissible isolation methods.

ISMS

Integrated Safety Management System.

Isotherm Constants

Empirical constants of different VOCs, determined from their experimental graphs showing relationship between the amount of the VOC adsorbed and the concentration of the VOC in the water.

Item

An all-inclusive term used in place of any of the following: appurtenance, assembly, component, data, equipment, material, module, part, sample, structure, subassembly, subsystem, system, or unit.

IWS

Integration Work Sheet.

Key Reviewers

Those persons responsible for reviewing and/or approving procedures for technical or administrative content.

Laboratory Control Standards (LCSs)

LCSs are aliquots of organic-free or deionized water to which known amounts of an analyte have been added. They are subjected to the same preparation/extraction procedure and analysis as samples. Stock solutions used for LCSs are purchased or prepared independently of calibration standards. LCS recovery indicates the accuracy of the analytical methods, equipment, and laboratory performance. For LCSs, the percent recovery is:

$$\frac{LC}{LT} \times 100$$

where:

LC = Laboratory LCS result.

LT = Expected result or true value of the LCS.

Lifetime QA Records

Records that provide baseline data for in-service inspection or records of significant value to demonstrate safe operation (i.e., maintain, repair, rework, replace, or modify) an item, or determine the cause of an accident or malfunction of an item, required to be maintained for the life of the facility by any applicable statute, regulation, or policy. Lifetime QA Records can also include any QA Record of activities affecting quality that is designated by Environmental Protection Department or ERD Data Management Team (DMT).

Linear Regression

A method for fitting a straight line through a set of data pairs. In the outlier algorithm, linear regression is used to model analyte concentrations as a function of time.

Lithology

A description of sediment or rock characteristics such as color, composition, grain size, bedding, sedimentary structures, sequences, and fossils.

Lithology (a database table)

A database working table in EPDData used while processing lithologic data in preparation for appending it to the global lithologic table.

Lithology Log

A detailed description of the method, technique, and chronology of drilling activities as well as sediment or rock characteristics such as color, composition, grain size, bedding, sedimentary structures, sequences, and fossils with depth. In addition, the lithologic log includes the length of core runs and the percentage of recovery. The sampling intervals and IDs are also listed on this form.

LLNL Environmental, Safety and Health Deficiency Tracking System (DefTrack)

The Deficiency Tracking System (DefTrack) is used to record and track the status of Environmental, Safety, and Health (ES&H) deficiencies from the time they are identified until they are closed and verified.

LLNL Personnel

The term includes all Laboratory personnel, including full-time employees (FTE), term (including students and post-doctoral researchers), and part time. It also includes Supplemental Labor Only (SLO), guests, and participating guests (See "outside subcontractor").

LLNL Single-Point LOTO

A specific procedure for a machine tool or other piece of equipment with only one energy-isolating device that can be readily identified and isolated. For some equipment with only one energy-isolating device, a detailed written lockout and tag procedure is not required. See SOP 4.16, "ERD Lockout/Tagout (LOTO) Program," Section 4.2, for details.

LLNL Technical Representative for the University

An LLNL person, delineated in contracts, who is responsible for day-to-day supervision of a contractor or subcontractor doing work for the Laboratory. This person may be an equipment supervisor or a functional supervisor, or both (See the definitions of "equipment supervisor" and "functional supervisor").

Loc_id

Loc_id is the name of the field in EPDData tables which contains information about the sample location. For example, B-1001 is the loc_id code for the borehole in which monitor well W-1001 was installed.

LOTO

Lockout and tagout. Specifically, the applying of a lock and associated identifying tag to an energy-isolating device it accordance with an established procedure to ensure that the device and equipment being controlled cannot be operated until the lock and associated tag are removed.

Lockout Device

A device that utilizes a positive means such as a lock to hold an energy-isolating device in a safe position and prevent a machine or equipment from energizing. Included are blank flanges and bolted slip blinds.

LOTO-Authorized Worker

A worker who locks out or tags out machines or equipment to perform service or maintenance. An affected worker may become a LOTO-authorized worker only when all of the following apply:

- The person's duties include performing service of maintenance activities covered under the LLNL LOTO Program.
- The person has completed the training requirements for the LLNL LOTO Program.
- The person has been authorized by his or her supervisor.

LOTO Tag

An approved LLNL form (see Figure 2 in Section 3.9) that can be securely fastened to an energy-isolating device with a lock in accordance with procedures established in the LLNL LOTO Program. This tag indicates that the energy-isolating device and the equipment being controlled shall not be operated until the lock and tag are removed.

Log File

An electronic file used for recording commands used and results obtained during execution of a procedure.

Log Number (log_no)

The number used as the unique identifier of a sample collected by LLNL, usually assigned by the analytical laboratory.

Logging Speed

The rate at which the logging tool is pulled up the borehole generally 10 to 20 ft/min.

Low-Yielding Monitoring Well

A ground water monitoring well completed in an aquifer having low hydraulic conductivity, and thus a limited capacity to transmit water. If the well is purged at a constant flow rate, either the screened interval or the pump intake will be exposed to the air prior to the removal of three well-casing volumes.

Lysimeter

A lysimeter is a water-permeable porcelain cup attached to a cylindrical polyethylene body fitted with two 0.25 in. metal tubes that permit surface access. Lysimeters are generally installed in the vadose zone at depths less than 40 ft. Application of a vacuum to the chamber of the lysimeter through the metal access tubes causes water from the surrounding soil (soil moisture) to flow from the soil pores through the porcelain cup into the lysimeter body. This water is then collected by applying positive air pressure to the chamber through one of the access tubes, forcing any collected water to the surface through the second access tube for sampling.

Master Logbook

The master logbook is a controlled document used for recording the creation, assignment, custody, and status of all field log books.

Matrix Spikes (MS)

MS are aliquots of samples to which known amounts of an analyte have been added. Stock solutions used for spiking should be purchased or prepared independently of calibration standards. Spikes are prepared and analyzed in each batch of samples and are subjected to the same preparation/extraction procedure and analysis as the samples in question. Spike recovery measures the effects of interferences from the sample matrix and reflects the accuracy of the determination. Spike recoveries are calculated as follows:

$$P = \frac{100(A - B)}{T},$$

where:

P = Percent spike recovery,

A = Concentration determined on spiked sample,

B = Concentration determined on original unspiked sample, and

T = True value of spike added.

Matrix Spike Duplicate (MSD)

An MSD measures the accuracy of the determination and the matrix effects as described in Sections 4.12 of this SOP, as well as repeatability or Relative Percent Difference of the measurements described in Section 4.19. The MS and MSD are aliquots of the same sample spiked with identical concentrations of target analytes. The MS and MSD are analyzed sequentially.

Measuring and Test Equipment (M&TE)

Devices or systems used to calibrate, measure, gauge, test, or inspect in order to control or acquire data to verify conformance to specified requirements.

Method Blanks

Method blanks consist of organic-free or deionized water (or clean sand for soil testing) carried through the analytical scheme like a sample. They serve to measure contamination associated with laboratory storage, preparation, or instrumentation.

monitor

A UNIX command that executes an application program providing convenient access and menu-selected functions for the monitor tables within the EPDData database.

Monitor Tables

A set of data tables in the relational database EPDDATA used by ERD for storage and retrieval of sampling location and analytical data results generated in environmental sampling and analysis activities.

MS Excel

The product name of a spreadsheet software application.

MS Word

The product name of a word-processing software application.

Multipath Error

A positioning error resulting from interference between radio waves that have traveled between the transmitter and the receiver by two paths of different electrical lengths.

New Data Log Table (new_data_log)

A data table where log numbers, CoC access numbers, and date of receipt for analytical results are recorded electronically.

Nonconformance

A deficiency in characteristic, documentation, or procedure that renders the quality of an item or activity unacceptable or indeterminate. Examples of nonconformance include: physical defects, test failures, incorrect or inadequate documentation, and deviation from prescribed procedures.

Ohm

The unit of electrical resistance one ampere of current will flow when the potential difference across the material is one volt.

Ohm-Meter

The standard unit of measurement for electrical resistivity logs. An ohm-meter is the resistivity of one cubic meter of material, which has a resistance of one ohm when electrical current flows through the material.

OpenIngres

The product name of the relational database management software package used to maintain EPDData and the Gemini databases.

ORAD

The Operations and Regulatory Affairs Division.

Organic Vapor Analyzer (OVA)

An OVA is used to measure total organic vapor concentration is a gas stream. Two different models were used in these studies. The first is a FID (flame ionization detector) and the second is a PID (photo ionization detector).

Organic Vapor Meter (OVM)

The OVM is a broad category of instruments which can determine total volatile organic compound concentrations in vapor. FID and PID meters are commonly referred to as OVMs.

Outlier

In the context of environment sampling, an outlier is an analytical result that is substantially inconsistent with other associated results. For example, if nearly all of the TCE results at a particular location are between 30 and 50 μg/L, then a single result of 250 μg/L would be an outlier.

Outside Subcontractors

Service and maintenance contractors, construction contractors, salvage contractors, and labor-only contractors.

Other Workers

Workers, other than LOTO-authorized workers and affected workers, who work in an area where LOTO procedures may be used.

Parameter Code Designator

Person designated to create parameter codes. This person should have sufficient database and chemistry knowledge to distinguish between chemical names and possible duplicates

Payroll Supervisor

The person who is administratively in charge of LOTO-authorized workers assigned to perform maintenance, including the locking out and tagging out of equipment. The payroll supervisor ensures that LOTO-authorized workers are trained, assigns activities to LOTO-authorized workers, maintains a list of their names, has access to their training records, and is usually the person who writes LOTO-authorized workers' performance appraisals. A payroll supervisor may be the work supervisor of a LOTO-authorized worker.

PDOP (Position Dilution of Precision) Mask

The highest PDOP value at which a receiver will compute position.

PDOP (Position Dilution of Precision) Switch

The PDOP value at which a receiver switches from computing 3D positions to computing 2D positions (used only in Auto 2D/3D mode).

Percent Relative Standard Deviation (%RSD)

A measure of precision.

$$\%\text{RSD} = \left(\frac{100}{\sqrt{2}}\right) * \left[\frac{2|\text{R1} - \text{R2}|}{(\text{R1} + \text{R2})}\right],$$

where:

R1 and R2 = The reported concentrations for each duplicate sample.

Permeability

The ability of a sediment or rock to transmit ground water or other fluids through pores, cracks, and/or fractures.

Personnel Protective Equipment (PPE)

Appropriate protective equipment, including personal protective equipment for eyes, face, head, and extremities; protective clothing; respiratory devices; and protective shields and barriers. Such equipment shall be provided, used, and maintained in a sanitary and reliable

condition for use wherever there are hazards capable of injuring or impairing the function of any part of the body through absorption, inhalation, or physical contact. Such hazards include those from processes or environment, chemical hazards, electrical hazards, radiological hazards, and mechanical irritants.

PETREX

PETREX is a patented name used by the Northeast Research Institute for a passive soil vapor collector that utilizes a carbon adsorbent contained in a glass housing that is capable of detecting trace amounts of volatile organic compounds in soil vapor.

Photoionization Detector (PID) Meter

A portable field instrument used to quantify purgeable aromatic compounds such as benzene, toluene, and xylene in vapors, but is also useful for other organic compounds. It is most effective on unsaturated compounds containing double bonds. The PID works by directing UV light onto the molecules, ionizing them, and measuring the current generated. The measured current is directly proportional to the number of ionized molecules, so the concentration of the compound(s) can be determined. It is usually calibrated against isobutylene, but can be calibrated using a compound of interest such as trichloroethene (TCE). However, this devise is not compound specific and its measurements represent an aggregate concentration of all compounds that are ionized and detected. Response factors can be changed to target specific compounds. This device is sensitive to moisture, therefore moist vapor streams should be analyzed using an alternate instrument such as an FID meter.

Piezometer

A small diameter monitor well (typically 2" or 4.5" in diameter) primarily used for the purpose of determining ground water elevation.

Portable GAC Canister

Carbon canisters of 55 gallon size or smaller which are not anchored to the base and which can be moved by a couple of technicians.

Position Dilution of Precision (PDOP)

A unitless figure that expresses the relationship between the error in user position and the error in satellite position. Good values are small, less than 3. Values greater than 7 are poor. A small PDOP indicates widely separated satellites, ensuring better accuracy.

Potential of Hydrogen (pH)

The hydrogen ion concentration of water is expressed as pH. The pH is measured on a scale from 0 to 14. It is a measure of the acidity or alkalinity of a solution, numerically equal to 7 for neutral solution. A pH less than 7 indicates an acid solution, whereas a pH greater than 7 indicates an alkaline solution. The pH is related to the hydrogen-ion concentration as follows:

$pH = - \log [H^+]$

ppb

Parts per billion (ppb) as used in this document is a unit of concentration in a gas based on a volume to volume ratio. Ppb refers to the volume of pollutant or compound per billion volumes of air (1 ppb = $1 \cdot 10^{-9}$ m^3 analyte/m^3 air).

ppm

Parts per million (ppm) as used in this document is a unit of concentration in a gas based on a volume to volume ratio. Ppm refers to the volume of pollutants or compound per million volumes of air (1 ppm = $1 \cdot 10^{-6}$ m^3 analyte/m^3 air).

Practical Quantitation Limit (PQL)

The PQL is approximately five times the method detection limit and represents a practical and routinely achievable detection limit with a relatively good certainty that any reported value is reliable.

Precision

The agreement among a set of replicate measurements without assumption of knowledge of the true value. Precision is estimated by means of duplicate/replicate analyses. The most commonly used estimates of precision are the percent relative standard deviation (RSD) 4.16 of this SOP, and relative percent difference (RPD) 4.19 of this SOP.

Pressure Transducers

Pressure transducers are devices to measure hydrostatic pressure, which can be converted to ground water elevations. A transducer is designed to measure pressures over a specific range of submergence. Outside this range, measurements will not be accurate, and the transducer can be damaged if submerged to depths exceeding the design range or subjected to negative pressures.

Procedure

A sequence of events described in an approved document which specifies how an activity is to be performed; the methods used; any specific equipment or material requirements; the sequence of operations; and how data is collected, recorded and reported.

Procedure Writer

A person assigned to develop a procedure that specifies or describes how an activity is to be performed.

Programmatic Equipment

Equipment used for programmatic purposes including lasers, power supplies, vacuum pumps, and walk-in refrigerators. This type of equipment may be maintained by programmatic personnel or the program may have an arrangement with the Plant Engineering Department for maintenance.

Pseudorandom Code

A code that appears to be randomly distributed, but is a complicated repeating pattern of 1s and 0s.

QBF

Query By Forms. An INGRES utility used for retrieving data from an INGRES relational database.

Quality

The degree to which an item or process meets or exceeds the user's requirements.

Quality Affecting Activities

Activities that, if not performed properly, could compromise the validity of information or data, could result in unacceptable risk to the radiological or environmental health or safety of the public or the workers involved, or could have a detrimental effect on the achievement of the prime objectives of the Laboratory.

Quality Assurance (QA) Record

A completed record or any authenticated portion of a record that provides objective evidence of the quality of items or activities.

Quality Control (QC) Data

A report of data used to evaluate the validity of analytical results, determining the quality of the analytical data.

Quality Control Samples

Samples that are introduced during the different phases of the data collection process to monitor the performance of the system.

Radioactivity

Radiation, including alpha particles, beta particles or electrons, and/or gamma rays emitted as a consequence of spontaneous nuclear reactions and/or decay of unstable isotopes.

Rawhiding

The process of pulsing compressed air into formation ground water in the screened interval of a well to loosen trapped fine sediment in the filter pack. Air pressure is increased for several seconds, then decreased suddenly. This process causes the column of water in the well to rise and fall, breaking fine sediment and drilling mud free from the filter pack.

RCRA Characteristic Waste

A waste which exhibits ignitability, corrosivity, reactivity, or toxicity.

Records Center (Division)

A facility, or area within a facility, designated as ERD's storage site for QA Records.

Redox Potential (Eh)

The potential for water to either oxidize (loss of electrons) or reduce (gain of electrons) dissolved constituents. Readings are made in millivolts.

Redox Potential (Eh)

Eh is a measure of a chemical reaction in which an atom or molecule loses electrons to another atom or molecule. The reaction is also known as oxidation-reduction. Oxidation is the loss of electrons, while reduction is the gain in electrons. The redox potential of water is measured in millivolts (mV).

Relative Percent Difference (%RPD)

$$\frac{(R1 - R2)}{\left[\frac{R1 + R2}{2}\right]} \times 100$$

where R1 and R2 are the result of analyzing replicate aliquots of a sample, with R1 indicating the first analysis of the sample and R2 its corresponding duplicate.

Relative Response Factor (RRF)

RRF is the calibration factor calculating the response versus peak area as compared to a known internal standard.

$$RRF = \frac{(A_s C_{is})}{(A_{is} C_s)},$$

where:

A_s = Response for the analyte to be measured,

A_{is} = Response for the internal standard,

C_{is} = Concentration of the internal standard, μg/L, and

C_s = Concentration of the analyte to be measured, μg/L.

Repeat Section

A quality assurance/quality control (QA/QC) procedure to evaluate the repeatability of the geophysical measurement. Generally, an interval of 50 ft or greater is logged twice and compared for repeatability.

Replicate Samples

Replicate samples are samples that have been divided into two or more portions at some step in the measurement process. A sample may be replicated in the field or at different points in the analytical process.

Rover

Any mobile GPS receiver collecting data during a field session. The receiver's position can be computed relative to another, stationary GPS receiver.

Safety Watch

A person designated and assigned by the work supervisor to assist a LOTO-authorized worker in performing maintenance or service on equipment that has no lockout attachment. This person shall be posted at an unlocked energy-isolating device to ensure that the device is not operated for the duration of the operation. The safety watch shall have no other duties, nor shall he/she leave his/her station for any reason, except when formally relieved from duty or for personal safety.

Sample

A representative fraction of material tested or analyzed in order to determine the nature, composition, and percentage of specified constituents, and possibly their reactivity (e.g., environmental samples, blanks, etc.).

Sample Blanks

Sample blanks should be used when characteristics such as color or turbidity interfere with a determination. In a spectrophotometric method, for example, the natural absorbency of the sample is measured and subtracted from the absorbency of the developed sample.

Sample Port

Valves with outlet through which water or gas samples are collected.

Sample Ts

A device composed of PVC pipe and Teflon tubing. It is attached to the discharge line of a submersible pump that allows the majority of the discharge to flow in the direction of the collection container or ground surface, as applicable, but allows a less turbulent flow of ground water through Teflon tubing for sample collection.

SAS

The product name of the statistical analysis and graphics software package used to identify and review outliers.

Scintillation Detector

A device for counting and recording frequency and intensity of light flashes (scintillations) emitted in certain media by absorption of ionizing particles or photons.

SEAMIST

SEAMIST is a brand name for some borehole liner systems used at LLNL. It stands for Science Engineering Associates Membrane Instrumentation System Technology. Science Engineering Associates no longer supplies these systems. Some of the SEAMIST systems used at this site were made by ECE Technologies of Houston Texas.

Selective Availability

Artificial degradation of the satellite signal by the Department of Defense. A DoD program to control the accuracy of pseudorange measurements, where the user receives a false pseudorange in error by a controlled amount. The error in position caused by S/A can be up to 100 meters. Differential GPS techniques can reduce these effects for local applications.

SEP

Safety and Environmental Protection.

Service or Maintenance

Workplace activities that may include constructing, installing, setting up, adjusting, inspecting, modifying, and maintaining or servicing machines or equipment. These activities include lubricating, cleaning, or unjamming machines or equipment and making adjustments or tool changes where personnel may be exposed to the unexpected energization of the equipment or release of hazardous energy.

Shiner

A metal tag fixed to the monitor well's cement pad indicating the location that was officially surveyed, providing the coordinates and elevation of the location. The tag is stamped with the monitor well's ID.

Single Blind Samples

A single blind sample is a performance evaluation (PE) check sample submitted to the laboratory. The laboratory knows it is a PE but does not know the analyte concentrations.

Slug/Bail Test

A slug/bail test measures the recovery of the ground water level in a well due to an instantaneous change in pressure.

Soil Surface Flux

Soil surface flux is the rate of exchange of one or more gases between soils and the atmosphere. An emission isolation flux chamber is used to measure this rate by placing the chamber on a soil surface and purging the air inside the chamber with pure sweep-air at a known rate. Gases which diffuse from the soil surface enter the emission isolation flux chamber and mix with the sweep air. By measuring the concentration in the chamber of each target gas once the chamber is at equilibrium, the flux rate ($mg \cdot m^{-2} \cdot min^{-1}$), may be calculated with the following formula:

$$F = (SR*C) / A$$

where

F = Flux rate ($mg \cdot m^{-2} \cdot min^{-1}$),

SR = Sweep Rate ($m^3 \cdot min^{-1}$),

C = Concentration of analyte ($mg \cdot m^{-3}$), and

A = Basal area of the flux chamber (m^2).

Soil Vapor Survey

A technique for the collection and analysis of soil vapor conducted to determine the presence of subsurface contamination of volatile and semivolatile compounds.

Solar Treatment Unit (STU)

A ground water treatment unit which uses solar power to pump water for treatment through carbon beds.

Soluble Threshold Limit Concentration (STLC)

A State of California method and value that can be used to determine if a waste is hazardous. Specifically, the STLC is the concentration of a solubilized and extractable bioaccumulative or persistent toxic substance as determined by the California Assessment Manual, Waste Extraction Test (CAM WET), which if equaled or exceeded in a waste or waste extract, renders the waste hazardous.

Sonde

The borehole geophysical measurement device lowered into boreholes and/or cased wells for measuring the physical properties of the geological materials penetrated by the borehole.

Sorbant-pads

Sorbant-pads are affixed to the outside of an IMT membrane and are used to collect and retrieve soil pore-water samples for laboratory analysis. If the sorbant-pad membrane is equipped with electrode pairs under each sorbant-pad, the electronic resistance of each pad can be measured and logged. These resistance values can be used to may make estimates of soil moisture content.

Source-to-Detector (or Transmitter-to-Receiver) Spacing

The distance between an electrode, radioactive source, coil or acoustic transmitter, and the receiver or detector.

spact

A set of data tables in the relational database EPDData used by ERD to store and retrieve data generated in the sampling plan and chain-of-custody tracking activities.

Specific Capacity

Specific capacity is an expression of the productivity of a well obtained by dividing the rate of discharge (Q) by the drawdown (Δs) of water in the well. Specific capacity should be described based on the number of hours of pumping prior to the time the drawdown measurement is made.

Specific Conductance

A measurement of the electrical conductivity of water. Specific conductance is measured in microhmos per cm and is a function of ion concentration.

Specific-Depth Grab Sample

In instances where the task leader has indicated that a grab sample is adequate, a specific-depth grab sample may be substituted for the standard 3 casing volume pre-sample purge, or other low-volume techniques. These devices, such as the EasyPump are designed to capture a sample from a specific point within the screened interval of a well using low voltage pumps and disposable sample capture attachments.

Specific-Depth Grab Sampling Device

A specific-depth grab sampling device, such as the EasyPump, is commonly used in wells exhibiting characteristics that do not allow for significant pre-sample purging techniques (>90% of one casing volume), or where it is believed that a representative sample can be collected with minimal pre-sample purging. This device incorporates a disposable sample capture chamber (specially modified, double-check valve bailers). It is equipped with a low-voltage pump at the top of the bailer which pulls water through the sample capture chamber.

Split Samples

Split samples are replicate samples divided into two portions, sent to different laboratories, and subjected to the same environmental conditions and steps in the measurement process.

SQL

Structured Query Language. A language used for retrieving data from a relational database.

Stove Pipe

A lockable, steel enclosure that prevents unauthorized access to above-grade completed monitor wells. The well ID is painted on the stove pipe for easy identification.

Stratigraphic Unit

A discrete unit or section of sediment or rock identified primarily by material with similar characteristics.

Strike

The angle between true North and the horizontal line contained in any planar feature (inclined bed, dike, fault plane, etc.); also the geographic direction of this horizontal line.

Surface Soil

Surface soil is defined as the top six inches of soil.

Surge Block

A well development device composed of one or more round rubber seals attached to a rod. The rubber seals are similar to the diameter of the well casing. As the rod is lowered and raised, a suction is created which helps to loosen and pull the silt and clay fines into the well. The fines then can be removed by pumping or bailing.

Surrogates

Surrogates are measured amounts of certain compounds added before sample preparation or extraction. Analysts measure the recovery of the surrogate to determine systematic extraction problems.

Sweep Air

Sweep air is contaminant free air used to exchange or "sweep" the air inside the flux chamber at a known rate. Sweep air may be provided in the form of ultra-pure "zero air" pressurized gas cylinders with a pressure regulator, or in the form of pumped ambient air filtered through activated carbon and desiccant columns. Accurate measurement of the sweep flow rate is essential to calculate soil vapor flux.

TeachText

The product name of a text editor software application.

Telnet

The product name of a terminal emulation software application.

Temperature Blank

A temperature blank is a container of water placed in the sample shipping container that the receiving laboratory measures to determine the water temperature, which indicates sample integrity and preservation.

Testing

Determination whether machinery, equipment, or equipment parts are de-energized. This involves the use of approved, properly operating test equipment designed for and capable of determining if any energized conditions exist.

Thermistor

A thermistor is a thermal resistance device. The electrical resistance across this device changes proportionally with changes in its temperature. A properly calibrated thermistor can

report temperatures with resolutions of less that 0.1° C. Thermistors were used in these studies because of their raggedness, ease of measurement and immunity to electrical noise.

Thermocouple

A thermocouple is an electronic device used to measure temperatures. These measurements are based on the premise that a small current will flow through the junction of two dissimilar metals that is proportional to the difference in temperature between the junction and the other end of the wires. The output from a thermocouple is only 1 or 2 millivolts. Signals with this magnitude are difficult to measure accurately and are subject to any type of electronic noise in the vicinity. When using these devices, extreme care must be taken to properly account for the temperature of the thermocouple wire pair at the data logger.

Time Constant

The time in seconds a gamma ray detector accumulates gamma ray emissions (counting time) to establish count rates.

Toxicity Characteristic Leaching Procedure (TCLP)

The TCLP is a U.S. Environmental Protection Agency (USEPA) analytical method designed to determine the mobility of both organics and inorganics in liquid, solid, and multiphase waste. It is used to determine applicability of Land Ban regulations to a waste.

Transducer

Transducers are devices used to measure some physical parameter, such as pressure or temperature, and convert these measurements to an electrical signal.

Tremie Pipe

A section of small diameter pipe, usually composed of polyvinyl chloride (PVC) tubing, which is used when adding sand, bentonite, or grout into the annulus of the borehole around the well casing so the annulus is filled from the bottom up. This helps to prevent bridging.

Trilateration

The process of determining a distance of an unknown location to four known reference points. This enables the 3D position of an unknown location to be computed.

Trip Blank

A trip blank consists of deionized (DI), nitrogen-purged or laboratory demonstrated analyte-free water prepared and provided by the contract analytical laboratory (CAL). Trip blanks are placed in the ice chest with the samples, transported to the field during sample collection, and then to the laboratory along with the samples. Trip blanks are not to be opened in the field;

otherwise they are to be handled and analyzed for volatile organics in the same way as samples acquired that day. Trip blanks act as an indicator of sample contamination through handling, preservation, and shipping.

Tritium

A radioisotope of hydrogen, hydrogen-3 (^3H). A tritium atom contains one proton and two neutrons. It emits low-energy beta radiation and is relatively short-lived, with a half-life of approximately 12.3 years.

Turbidity

A measurement of water clarity.

Turnaround Time

The time span between the submittal of samples to the analytical laboratory and the receipt of results.

Update Logbook

A controlled logbook used for documenting all update activity performed by EPD DMT personnel in the EPDData Database.

User

ERD or other designated programs.

Verification

The act of evaluating and documenting whether processes, items, services, or documents meet specified requirements.

Verify

To perform appropriate measurements and attempt to operate equipment controls, after an energy-isolating procedure has been performed but before maintenance or repair work is initiated, to determine that the hazardous energy has been isolated and the equipment cannot be energized or restarted.

Vertical Resolution

The minimum thickness of a geologic unit that can be resolved by a particular geophysical measurement. Vertical resolution is related to source-to-detector spacing, and the physics of the individual measurements.

Volatile Organic Compounds (VOCs)

A group of organic compounds characterized by their tendency to evaporate easily at room temperatures (e.g., gasoline, paint thinners, and nail polish remover).

Volatilization

The rapid loss of compounds through evaporation at ordinary temperatures.

Walk-about

A walk-about is an informal assessment used to help management better understand the work being done, and increase his or her visibility and availability in an informal work setting, hear first hand employee concerns and comments and receive input/feedback, observe working conditions and practices, and recognize accomplishments and acknowledge good work practices.

Well Disinfection

Each well that is designated as part of the network to be sampled for total and fecal coliform bacteria must be disinfected prior to sampling. These wells will be disinfected by using a disinfectant containing at least 100 mg/L of available chlorine.

Well Screen

The section of the completed well with perforations in the casing that allows water to flow into the casing.

Wlithologic

A personally owned working table in EPDData used while processing lithologic data in preparation for appending it to the global lithologic table.

Wonderland

The Wonderland domain is a distributed computing environment or netgroup sharing controlled access to hosts and resources such as disk space, printing and automated backup services.

Work Supervisor

The person designated by management to be the day-to-day supervisor of a LOTO-authorized worker. A work supervisor may be the payroll supervisor of a LOTO-authorized worker assigned a specific, short-term duty in an area. LOTO-authorized workers assigned duties in more than one area may have more that one work supervisor. A work supervisor shall

assure that LOTO-authorized workers are trained and qualified to perform assigned tasks. A work supervisor may also be a LOTO-authorized worker.

Working Tables

Tables within the EPDData database which are owned by an individual's personal account.[1] All working table names begin with a "w," e.g., wsample, wanalysis. Data within such tables can only be accessed by the individual owner and is not yet part of the globally accessible data in the database.

[1]All working table names begin with a "w", e.g., wsample, wanalysis.

LAWRENCE LIVERMORE
NATIONAL LABORATORY

Lawrence Livermore National Security, LLC • Livermore, California • 94551